PRECAST SPECIFICATION REQUIREMENT
Part 3 : Finishes Product – Hollow core slabs * BS EN 1168:2005

No	Item

1 <u>Geometrical properties</u>

1a. Dimensional tolerances (maximum deviations)

(a) Linear element

Table 4 : Dimension tolerance for linear elements

** BS EN 13225:2004(E)*

Measurement	Permitted deviation	Values
Angle deviation "δ" of end - or cross-sections	±δ	$h/100 \geq 5$ mm
Bow misalignment "ε" in any principal plane	± ε	$L/700$

(b) Permitted deviations of cross-sections for structural elements

Table 3 : Permitted deviations of cross-sections for structural elements

** BS EN 13369:2004*

Target dimension of the cross-section in the direction to be checked	ΔL (mm)	Δc (mm)
L ≤ 150 mm	+10 -5	± 5
L = 400 mm	± 15	+15 -10
L ≥ 2500 mm	± 30	+30 -10

1b. Columns

Table 4 : Dimension tolerance for linear elements

** BS EN 13225:2004(E)*

Measurement	Permitted deviation	Values
Angle deviation "δ" of end - or cross-sections	±δ	$h/100 \geq 5$ mm
Bow misalignment "ε" in any principal plane	± ε	$L/700$

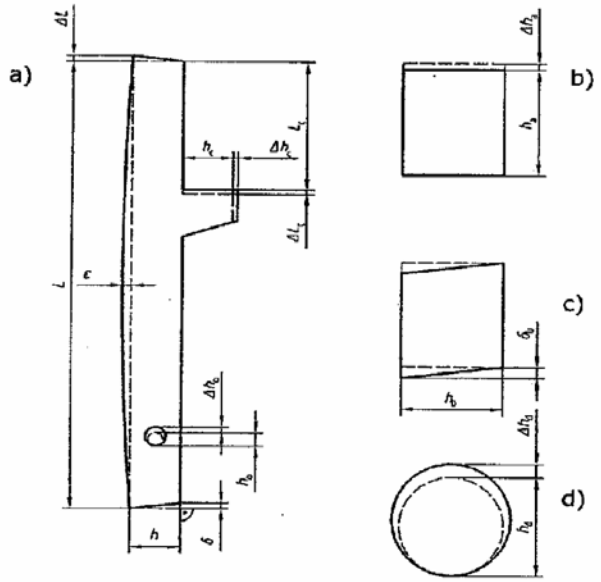

FIGURE 2: Tolerances for Columns
(BS EN 13225:2004 E)

PRECAST SPECIFICATION REQUIREMENT Part 3 : Finishes Product – Hollow core slabs * BS EN 1168:2005	
No	**Item**
1c.	Beams

Table 4 : Dimension tolerance for linear elements

** BS EN 13225:2004(E)*

Measurement	Permitted deviation	Values
Angle deviation "δ" of end - or cross-sections	±δ	$h/100 \geq 5$ mm
Bow misalignment "ε" in any principal plane	± ε	$L/700$

Table 5 : Additional dimension tolerance for linear elements-Beams

** BS EN 13225:2004(E)*

Measurement	Permitted deviation	Values
Skew "θ" of the vertical central plane	±θ	$L/700$
Chamber "ν" in vertical plane	± Δν	$L/700$

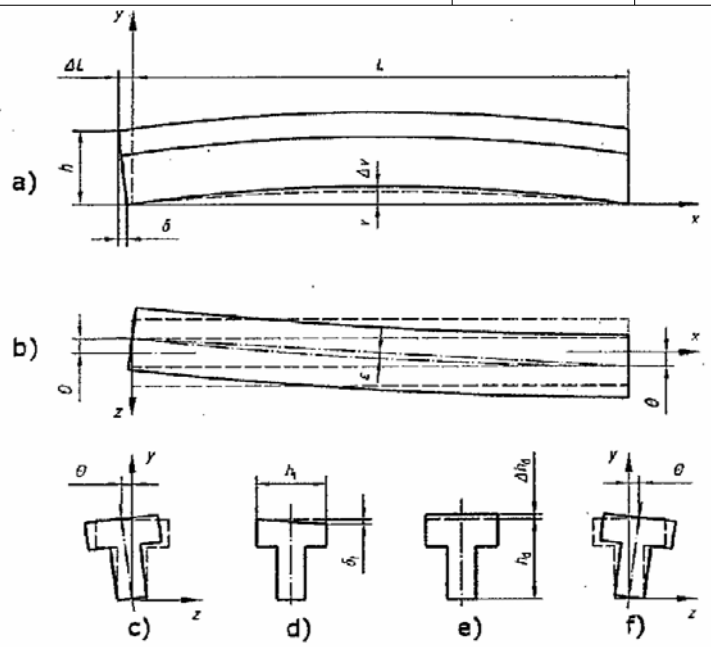

FIGURE 3: Tolerances for Beams
*(BS EN 13225:2004 E)