STANDARD MECHANICAL DESIGN DETAIL DRAWING FOR MECHANICAL SYSTEMS IN BUILDINGS

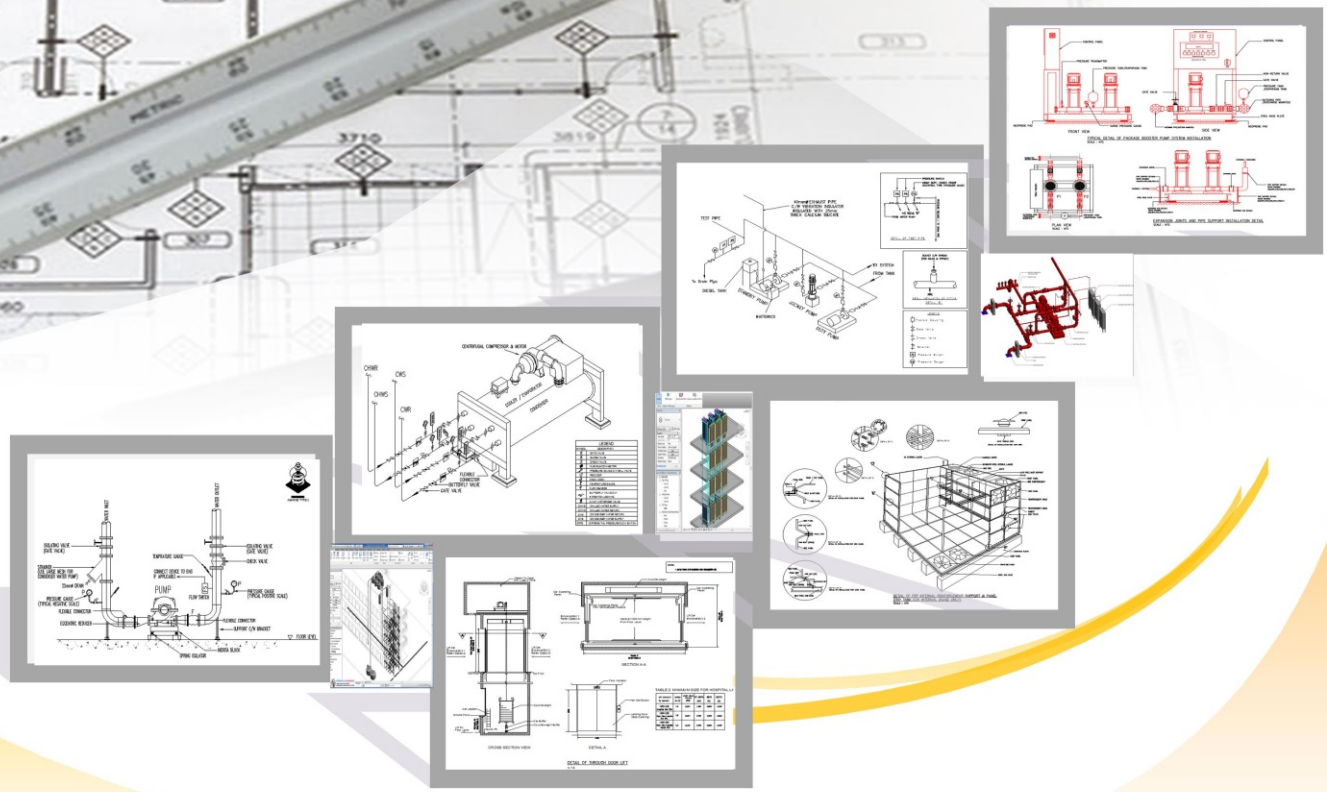

CAWANGAN KEJURUTERAAN MEKANIKAL
IBU PEJABAT JKR MALAYSIA

REVISION 2017

Contents

1 Foreword

2 List of Drawings

- Section I :Air Conditioning & Mechanical Ventilation System
- Section II :Fire Fighting System
- Section III :Lift & Escalator System
- Section IV :Cold Water and Sanitary Plumbing System

3 Acknowledgement

Foreword

This **Standard Mechanical Design Detail Drawing For Mechanical Systems in Buildings** was prepared as a revised edition to the 1st edition published in 2011.

This 2nd edition 2017 is an improved version to enhance guidance and information for Mechanical Engineers with the latest requirement of the detailed installation of mechanical system specifically focus on Air Conditioning & Mechanical System, Fire Fighting System, Lift System and Cold Water and Sanitary Plumbing System in government building projects.

The revised edition have adopted latest requirement, standards and requirement such as standard JKR technical specification and criteria from lesson learned, do and dont's as well as good engineering practices.

The objectives of the standard detail drawings are as follows:

- ✓ Assist JKR professional with the latest requirement in the design and installation of mechanical system in the building
- ✓ Provide latest reference for JKR mechanical designers, project team and contractors
- ✓ To expedite time for preparing tender document as well as procurement of mechanical system in the building
- ✓ Improve quality of installation of mechanical system in the government building project implementation

Special thanks to committee members who were highly dedicated and who contributed towards the successful completion of this standard drawings.

IR. GOPAL NARIAN KUTTY JMW,AMN
PENGARAH KANAN
CAWANGAN KEJURUTERAAN MEKANIKAL
IBU PEJABAT JKR MALAYSIA
KUALA LUMPUR

Acknowledgement

Special thanks to the following for making the revision of this publication possible.

1.	Ir. Razdwan bin Kasim	Pengarah Khidmat Pakar Cawangan Kejuruteraan Mekanikal
2.	Ir. Mamat Rohizan bin Abdullah	Pengarah Rekabentuk Cawangan Kejuruteraan Mekanikal
3.	Ir. Hj. Zulkifli bin Abdul Rashad	Cawangan Kejuruteraan Mekanikal
4.	En. Che Hasim bin Awang	Cawangan Kejuruteraan Mekanikal
5.	Pn. Syarifah Dzain binti Syed Yusof	Cawangan Kejuruteraan Mekanikal
6.	En. Azrul Nizam bin Adenan	Cawangan Kejuruteraan Mekanikal
7.	En. Mohd Hairie bin Abdul Halim	Cawangan Kejuruteraan Mekanikal
8.	En. Afdhal bin Yusof	Cawangan Kejuruteraan Mekanikal
9.	En. Bong Boon Kang	Cawangan Kejuruteraan Mekanikal
10.	En. Ramli bin Husin	Cawangan Kejuruteraan Mekanikal
11.	En. Mohd Affendy bin Sukarseh	Cawangan Kejuruteraan Mekanikal
12.	En. Mohd Hakim bin Awaluddin	Cawangan Kejuruteraan Mekanikal
13.	En. Wan Hisyam bin Wan Mansor	Cawangan Kejuruteraan Mekanikal
14.	En. Mohd Azhar bin Abd Razak	Cawangan Kejuruteraan Mekanikal

Special thanks to the JKR committee members for Standard Mechanical Design Detail Drawing For Mechanical Systems in Buildings which consist of the following representatives:

1.	Ir. Mohamad Zaini bin Bakar	Cawangan Kejuruteraan Mekanikal
2.	Ir. Yatim Selamat bin Latib	Cawangan Kejuruteraan Mekanikal
3.	Ir. Hj. Hasbullah bin Osman	Cawangan Kejuruteraan Mekanikal
4.	Ir. Mohamad Tarmuzi bin Mat Nor	CKM Negeri Selangor
5.	En. Mohd Norddin bin Ismail	Cawangan Kerja Bangunan Am
6.	Ir. Mohammad Nazri bin Sulaiman	Cawangan Kejuruteraan Mekanikal
7.	En. Mohd Izzat Zumairi bin Che Harun	Cawangan Kejuruteraan Mekanikal
8.	Ir. Mohd Azmi bin Hashim	Cawangan Kejuruteraan Mekanikal
9.	Ir. Nor Haziman bin Noh	Cawangan Kejuruteraan Mekanikal
10.	En. Azizul Rahim bin Mohamad Zulkifli	Cawangan Kejuruteraan Mekanikal
11.	En. Mohd Maarif bin Abdul Malik	Cawangan Kejuruteraan Mekanikal
12.	En. Mohd Faiz Fikri bin Yussoff	Cawangan Kejuruteraan Mekanikal

STANDARD MECHANICAL DESIGN DETAIL DRAWING FOR MECHANICAL SYSTEMS IN BUILDINGS

SECTION 1 : AIR CONDITIONING AND MECHANICAL VENTILATION SYSTEM

CAWANGAN KEJURUTERAAN MEKANIKAL
IBU PEJABAT JKR MALAYSIA
KUALA LUMPUR

JKR
MEKANIKAL

JASA KEPADA RAKYAT

2017

LIST OF DRAWINGS

A. CENTRALIZE SYSTEM

NO.	DRAWING TITLE	DRAWING NUMBER
1.0	WATER SIDE	
1.1	PLANT ROOM	
1	TYPICAL DETAIL OF WATER COOLED CHILLER CONNECTION	CKM/STD/AC/PLANT/REV2017/01
2	TYPICAL SCREW TYPE WATER COOLED CHILLER PIPING CONNECTION DETAILS	CKM/STD/AC/PLANT/REV2017/02
3	TYPICAL CENTRIFUGAL TYPE WATER COOLED CHILLER PIPING CONNECTION DETAILS	CKM/STD/AC/PLANT/REV2017/03
4	TYPICAL AIR COOLED CHILLER PIPING CONNECTION DETAILS	CKM/STD/AC/PLANT/REV2017/04
5	TYPICAL PUMP INSTALLATION DETAILS	CKM/STD/AC/PLANT/REV2017/05
6	TYPICAL PUMP INSTALLATION DETAILS	CKM/STD/AC/PLANT/REV2017/06
7	TYPICAL PUMP INSTALLATION DETAILS	CKM/STD/AC/PLANT/REV2017/07
8	TYPICAL PUMP INSTALLATION DETAILS	CKM/STD/AC/PLANT/REV2017/08
9	PUMP AND MOTOR BASE	CKM/STD/AC/PLANT/REV2017/09
10	TYPICAL COOLING TOWER INSTALLATION	CKM/STD/AC/PLANT/REV2017/10
11	TYPICAL PIPE FITTING CONNECTION DETAILS FOR COOLING TOWER	CKM/STD/AC/PLANT/REV2017/11
12	COOLING TOWER CONNECTION DETAILS (WITH STANDBY UNIT)	CKM/STD/AC/PLANT/REV2017/12
13	COOLING TOWER CONNECTION DETAILS	CKM/STD/AC/PLANT/REV2017/13
14	DETAIL OF TYPICAL CONDENSER WATER MAKE-UP TANK	CKM/STD/AC/PLANT/REV2017/14
15	CHILLED WATER EXPANSION TANK	CKM/STD/AC/PLANT/REV2017/15
16	CONDENSER WATER TREATMENT – FULLY AUTOMATIC DOSING SYSTEM	CKM/STD/AC/PLANT/REV2017/16
17	TYPICAL NEOPRENE PADS	CKM/STD/AC/PLANT/REV2017/17
1.2	PIPE	
18	PIPE HANGERS FOR INSULATED PIPE (OUTSIDE MECHANICAL ROOM)	CKM/STD/AC/PIPE/REV2017/01
19	PIPE HANGERS FOR INSULATED PIPE (INSIDE MECHANICAL ROOM)	CKM/STD/AC/PIPE/REV2017/02
20	FLOOR MOUNTED PIPE SUPPORT (OUTSIDE MECHANICAL ROOM)	CKM/STD/AC/PIPE/REV2017/03
21	FLOOR MOUNTED PIPE SUPPORT (INSIDE MECHANICAL ROOM)	CKM/STD/AC/PIPE/REV2017/04
22	PIPE SADDLE WITH 'U'-BOLT	CKM/STD/AC/PIPE/REV2017/05
23	CROSS SECTION OF UNDERGROUND PIPES	CKM/STD/AC/PIPE/REV2017/06
24	UNDERGROUND PIPE INSULATION JOINT AND SUPPORT	CKM/STD/AC/PIPE/REV2017/07
25	DETAIL DRAWING PRE-INSULATION PIPE BURIED UNDERGROUND	CKM/STD/AC/PIPE/REV2017/08
26	DETAILS OF PIPES HANGER AND BRACKETS	CKM/STD/AC/PIPE/REV2017/09
27	DETAILS OF PIPES THROUGH WALLS AND FLOOR	CKM/STD/AC/PIPE/REV2017/10
28	DETAIL OF JOINT FOR CHILLED WATER PIPE AT INTERFACING LINE	CKM/STD/AC/PIPE/REV2017/11
29	TYPICAL CHILLED WATER VALVE INSULATION DETAILS	CKM/STD/AC/PIPE/REV2017/12
30	DETAIL OF CHILLED WATER PIPE FITTINGS INSTALLATION	CKM/STD/AC/PIPE/REV2017/13
31	PIPE RISER THROUGH FLOOR SLAB MOUNTING DETAILS	CKM/STD/AC/PIPE/REV2017/14
32	CONDENSATE DRAIN DETAIL	CKM/STD/AC/PIPE/REV2017/15
33	CONDENSATE DRAIN DETAIL	CKM/STD/AC/PIPE/REV2017/16
34	PIPE MECHANICAL JOINT COUPLING	CKM/STD/AC/PIPE/REV2017/17

JKR MEKANIKAL

JASA KEPADA RAKYAT

CAWANGAN KEJURUTERAAN MEKANIKAL
Ibu Pejabat JKR Malaysia

AIR CONDITIONING AND MECHANICAL VENTILATION SYSTEM

LIST OF DRAWINGS

DATE	SCALE
2017	N.T.S

BILANGAN LUKISAN

CKM/STD/AC/LOD/REV2017/01

LIST OF DRAWINGS (CONT')

NO.	DRAWING TITLE	DRAWING NUMBER
2.0	AIR SIDE	
2.1	AIR HANDLING UNIT	
35	TYPICAL FCU CONNECTION USING 2 WAY VALVE	CKM/STD/AC/AHU/REV2017/01
36	TYPICAL FCU CONNECTION USING 3 WAY VALVE	CKM/STD/AC/AHU/REV2017/02
37	TYPICAL AHU CONNECTION USING 2 WAY VALVE	CKM/STD/AC/AHU/REV2017/03
38	TYPICAL AHU CONNECTION USING 3 WAY VALVE	CKM/STD/AC/AHU/REV2017/04
39	TYPICAL AHU INSTALLATION WITH MIXING BOX	CKM/STD/AC/AHU/REV2017/05
40	TYPICAL AHU INSTALLATION WITHOUT MIXING BOX	CKM/STD/AC/AHU/REV2017/06
41	DETAIL OF AHU ROOM INSULATION	CKM/STD/AC/AHU/REV2017/07
42	FIRE DAMPER INSTALLATION DETAIL	CKM/STD/AC/AHU/REV2017/08
43	MOTORISED FIRE DAMPER DETAIL	CKM/STD/AC/AHU/REV2017/09
44	DETAILS OF CONDENSATE DRAIN	CKM/STD/AC/AHU/REV2017/10
2.2	DUCTING	
45	DUCT CONSTRUCTION DETAIL	CKM/STD/AC/DUCT/REV2017/01
46	DUCT CONSTRUCTION DETAIL	CKM/STD/AC/DUCT/REV2017/02
47	DUCT CONSTRUCTION DETAIL	CKM/STD/AC/DUCT/REV2017/03
48	VANES	CKM/STD/AC/DUCT/REV2017/04
49	GENERAL LAYOUT OF DUCT CONSTRUCTION	CKM/STD/AC/DUCT/REV2017/05
50	DUCT SUPPORT AND BRACKET DETAIL	CKM/STD/AC/DUCT/REV2017/06
51	TDC JOINT & REINFORCEMENT	CKM/STD/AC/DUCT/REV2017/07
52	DUCT JOINT DETAIL	CKM/STD/AC/DUCT/REV2017/08
53	DUCT CONSTRUCTION DETAIL	CKM/STD/AC/DUCT/REV2017/09
54	DUCT CONSTRUCTION DETAIL	CKM/STD/AC/DUCT/REV2017/10
55	INTERNAL DUCT INSULATION WITH POLYURETHANE (PU)	CKM/STD/AC/DUCT/REV2017/11
56	INTERNAL DUCT INSULATION WITH FIBREGLASS MATERIAL	CKM/STD/AC/DUCT/REV2017/12
57	INTERNAL DUCT INSULATION WITH CLOSED CELL NITRILE RUBBER MATERIAL	CKM/STD/AC/DUCT/REV2017/13
58	TYPICAL DUCT INSULATION WITH POLYETHYLENE (PE) MATERIAL	CKM/STD/AC/DUCT/REV2017/14
59	DUCT SUPPORT DETAIL (OUTSIDE MECHANICAL ROOM)	CKM/STD/AC/DUCT/REV2017/15
60	DUCT SUPPORT DETAIL (INSIDE MECHANICAL ROOM)	CKM/STD/AC/DUCT/REV2017/16
61	DUCT SUPPORT DETAIL (UNDER THE ROOF)	CKM/STD/AC/DUCT/REV2017/17
62	DUCT SUPPORT DETAIL (UNDER THE ROOF)	CKM/STD/AC/DUCT/REV2017/18
63	DUCT SUPPORT AND BRACKET DETAIL	CKM/STD/AC/DUCT/REV2017/19
64	DUCT CONNECTION DETAIL FOR FAN COIL UNIT (FCU)	CKM/STD/AC/DUCT/REV2017/20
65	FLEXIBLE CONNECTION FOR RECTANGULAR (FAN OUTLET/INLET)	CKM/STD/AC/DUCT/REV2017/21
66	DETAIL OF VENTILATION SYSTEM INSTALLATION	CKM/STD/AC/DUCT/REV2017/22
67	DETAIL OF VENTILATION SYSTEM INSTALLATION	CKM/STD/AC/DUCT/REV2017/23
68	DUCT PENETRATION DETAIL	CKM/STD/AC/DUCT/REV2017/24

JKR MEKANIKAL

JASA KEPADA RAKYAT

CAWANGAN KEJURUTERAAN MEKANIKAL
Ibu Pejabat JKR Malaysia

AIR CONDITIONING AND MECHANICAL VENTILATION SYSTEM

LIST OF DRAWINGS

DATE	SCALE
2017	N.T.S

BILANGAN LUKISAN

CKM/STD/AC/LOD/REV2017/02

LIST OF DRAWINGS (CONT')

NO.	DRAWING TITLE	DRAWING NUMBER
	DUCTING (CONT')	
69	DUCT SUPPORT & BRACKET DETAIL	CKM/STD/AC/DUCT/REV2017/25
70	DUCT SUPPORT & BRACKET DETAIL	CKM/STD/AC/DUCT/REV2017/26
71	SPLITTER DAMPER DETAIL	CKM/STD/AC/DUCT/REV2017/27
72	DUCTWORK ACCESS PANELS	CKM/STD/AC/DUCT/REV2017/28
73	SQUARE SWIRL DIFFUSER DETAIL	CKM/STD/AC/DUCT/REV2017/29
74	SQUARE DIFFUSER DETAIL	CKM/STD/AC/DUCT/REV2017/30
75	TYPICAL DETAIL OF SQUARE DIFFUSER CONNECTION WITHOUT PLENNUM BOX	CKM/STD/AC/DUCT/REV2017/31
76	TYPICAL DETAIL OF SQUARE DIFFUSER CONNECTION WITH PLENNUM BOX	CKM/STD/AC/DUCT/REV2017/32
77	TYPICAL DETAIL OF SQUARE DIFFUSER CONNECTION WITHOUT PLENNUM BOX (UNDER THE ROOF)	CKM/STD/AC/DUCT/REV2017/33
78	TYPICAL DETAIL OF SQUARE DIFFUSER CONNECTION WITH PLENNUM BOX (UNDER THE ROOF)	CKM/STD/AC/DUCT/REV2017/34
79	INSTALLATION OF SMOKE DETECTOR INSIDE DUCTING	CKM/STD/AC/DUCT/REV2017/35

B. UNITARY SYSTEM

NO.	DRAWING TITLE	DRAWING NUMBER
1.0	AIR COOLED SPLIT UNIT	
80	REFRIGERANT PIPING SCHEMATIC AND CONTROL DIAGRAM	CKM/STD/AC/SPLIT UNIT/REV2017/01
81	INSTALLATION OF SPLIT UNIT	CKM/STD/AC/SPLIT UNIT/REV2017/02
82	INSTALLATION OF SPLIT UNIT	CKM/STD/AC/SPLIT UNIT/REV2017/03
83	INSTALLATION OF SPLIT UNIT	CKM/STD/AC/SPLIT UNIT/REV2017/04
84	REFRIGERANT PIPE INSTALLATION CONCEALED IN BRICK WALL	CKM/STD/AC/SPLIT UNIT/REV2017/05
85	REFRIGERANT PIPE INSTALLATION USING GI TRUNKING	CKM/STD/AC/SPLIT UNIT/REV2017/06
86	INSTALLATION OF CENTRALISED DRAIN PIPE	CKM/STD/AC/SPLIT UNIT/REV2017/07

JKR MEKANIKAL

JASA KEPADA RAKYAT

CAWANGAN KEJURUTERAAN MEKANIKAL
Ibu Pejabat JKR Malaysia

AIR CONDITIONING AND MECHANICAL VENTILATION SYSTEM

LIST OF DRAWINGS

DATE	SCALE
2017	N.T.S

BILANGAN LUKISAN

CKM/STD/AC/LOD/REV2017/03

PLANT ROOM

JKR
MEKANIKAL

JASA KEPADA RAKYAT

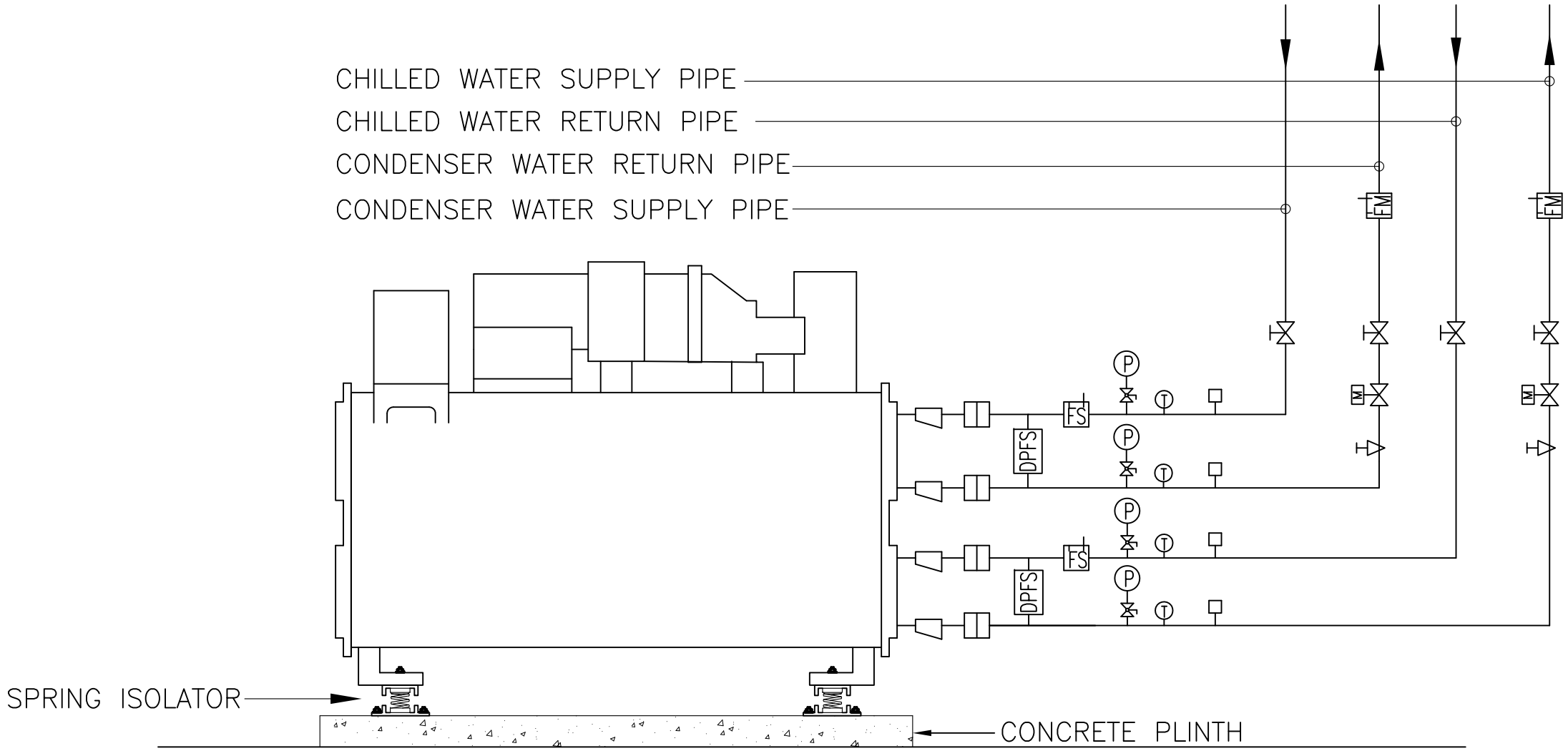

TYPICAL SCHEMATIC DETAIL OF WATER COOLED CHILLER CONNECTION

NOTE:

LEGEND

- GATE VALVE
- MOTORIZED VALVE
- FLOW METER
- FLOW SWITCH
- FLEXIBLE COUPING
- TEMPERATURE SENSOR (LINK TO BAS IF APPLICABLE)
- TEMPERATURE GAUGE
- HEAVY DUTY PRESSURE GAUGE C/W BALL VALVE
- ECCENTRIC REDUCER
- BALANCING VALVE
- DIFFERENTIAL PRESSURE FLOW SWITCH

JKR MEKANIKAL

JASA KEPADA RAKYAT

CAWANGAN KEJURUTERAAN MEKANIKAL
Ibu Pejabat JKR Malaysia

AIR CONDITIONING SYSTEM

TYPICAL DETAIL OF WATER COOLED CHILLER CONNECTION

DATE	SCALE
2017	N.T.S

DRAWING NUMBER

CKM/STD/AC/PLANT/REV2017/01

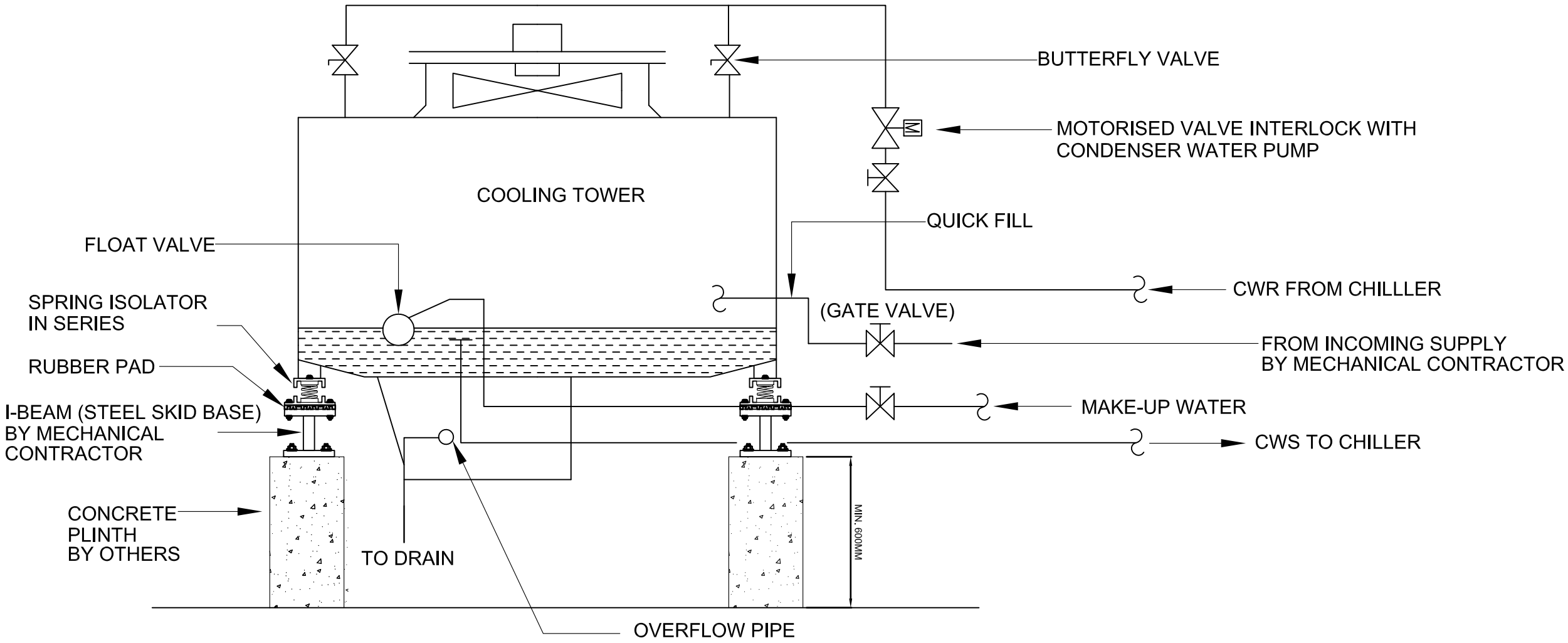

TYPICAL COOLING TOWER INSTALLATION

NOTE:

LEGEND

- GATE VALVE
- MOTORIZED VALVE
- BUTTERFLY VALVE
- CWR CONDENSER WATER RETURN
- CWS CONDENSER WATER SUPPLY

JKR MEKANIKAL

JASA KEPADA RAKYAT

CAWANGAN KEJURUTERAAN MEKANIKAL
Ibu Pejabat JKR Malaysia

AIR CONDITIONING SYSTEM
TYPICAL COOLING TOWER
INSTALLATION

DATE	SCALE
2017	N.T.S

DRAWING NUMBER
CKM/STD/AC/PLANT/REV2017/10

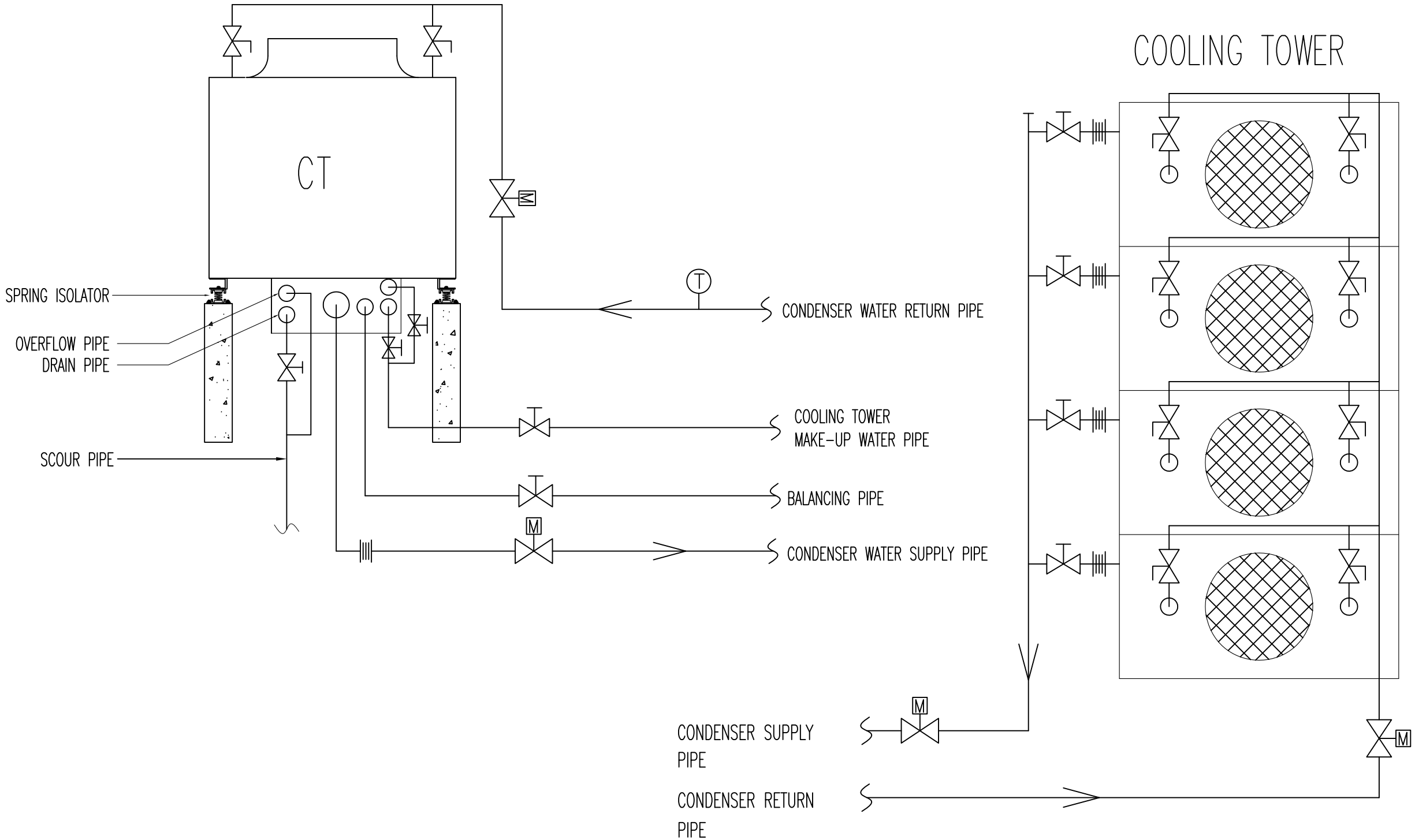

TYPICAL PIPE FITTING CONNECTION DETAILS

FOR COOLING TOWER

NOTE:

LEGEND

- GATE VALVE
- MOTORIZED VALVE
- BUTTERFLY VALVE
- FLEXIBLE CONNECTOR
- TEMPERATURE GAUGE

JKR MEKANIKAL

JASA KEPADA RAKYAT

CAWANGAN KEJURUTERAAN MEKANIKAL
Ibu Pejabat JKR Malaysia

AIR CONDITIONING SYSTEM

TYPICAL PIPE FITTING CONNECTION DETAILS
FOR COOLING TOWER

DATE	SCALE
2017	N.T.S

DRAWING NUMBER

CKM/STD/AC/PLANT/REV2017/11

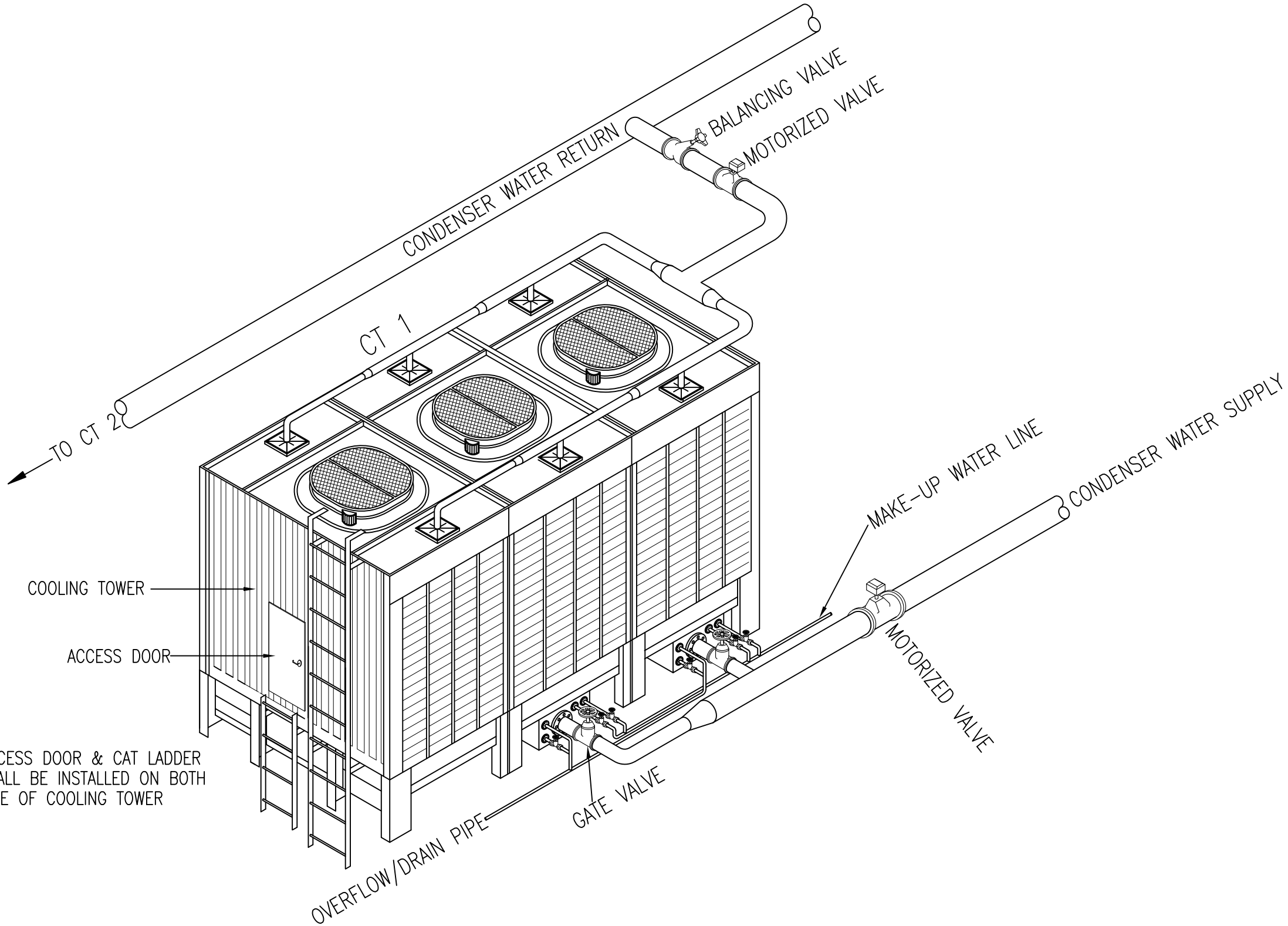

NOTE: ACCESS DOOR & CAT LADDER SHALL BE INSTALLED ON BOTH SIDE OF COOLING TOWER

COOLING TOWER CONNECTION DETAILS (WITH STANDBY UNIT)

NOTE:

JASA KEPADA RAKYAT

CAWANGAN KEJURUTERAAN MEKANIKAL
Ibu Pejabat JKR Malaysia

AIR CONDITIONING SYSTEM

COOLING TOWER CONNECTION DETAILS (THREE CELL)

DATE	SCALE
2017	N.T.S

DRAWING NUMBER

CKM/STD/AC/PLANT/REV2017/12

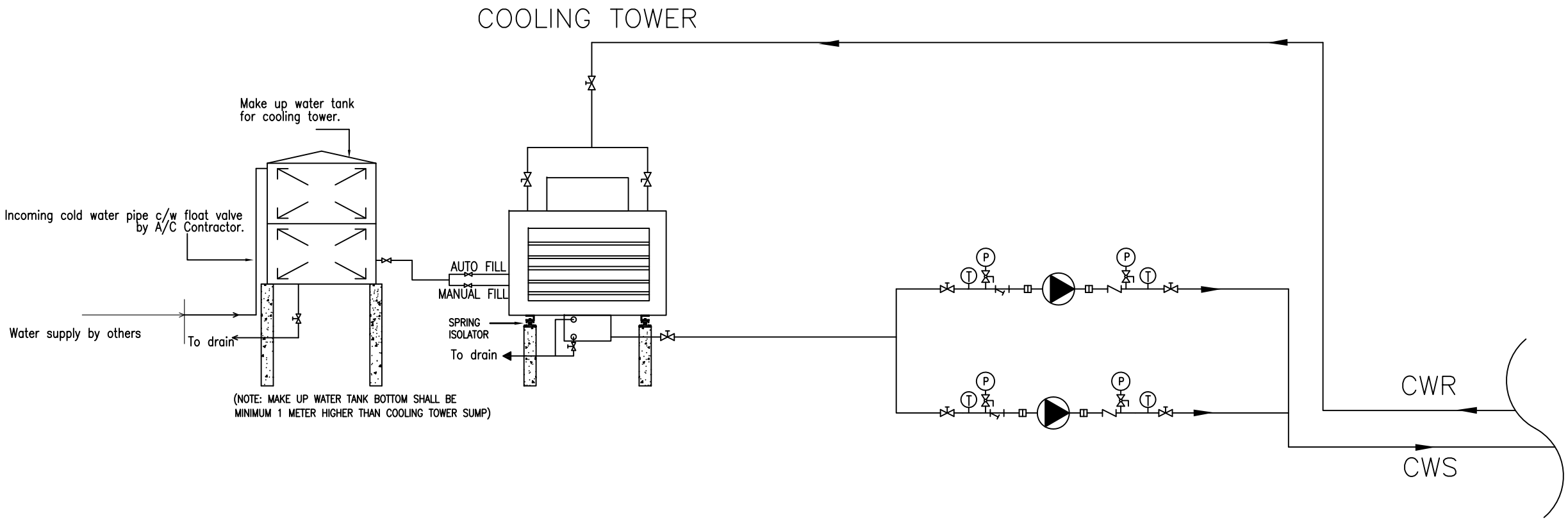

COOLING TOWER CONNECTION DETAILS

NOTE:

LEGEND

	GATE VALVE
	BUTTERFLY VALVE
	CHECK VALVE
	FLEXIBLE COUPLING
	HEAVY DUTY PRESSURE GAUGE C/W BALL VALVE
	STRAINER
	TEMPERATURE GAUGE
CWR	CONDENSER WATER RETURN
CWS	CONDENSER WATER SUPPLY

JKR MEKANIKAL

JASA KEPADA RAKYAT

CAWANGAN KEJURUTERAAN MEKANIKAL
Ibu Pejabat JKR Malaysia

AIR CONDITIONING SYSTEM

COOLING TOWER CONNECTION DETAILS

DATE	SCALE
2017	N.T.S

DRAWING NUMBER

CKM/STD/AC/PLANT/REV2017/13

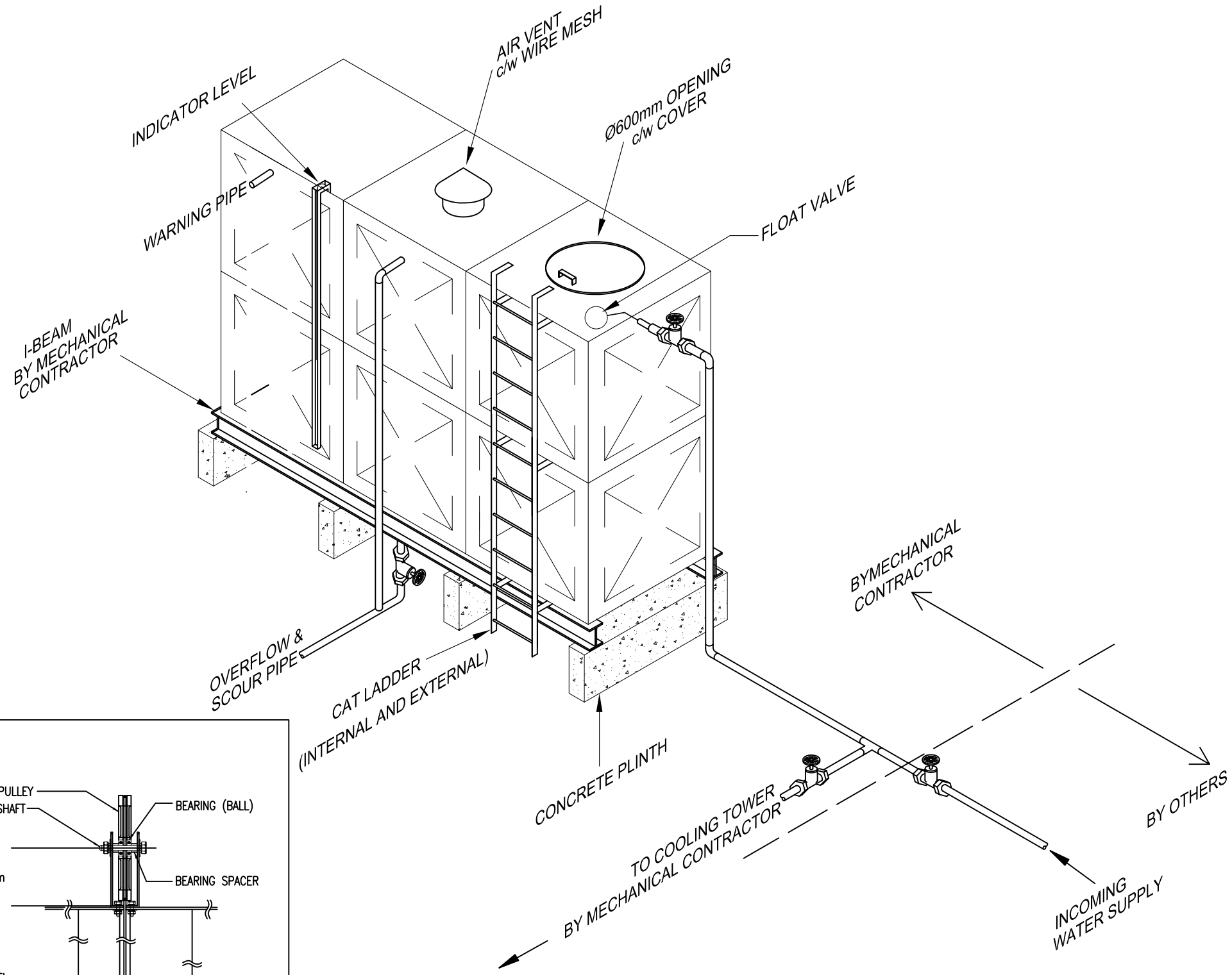

DETAIL OF TYPICAL CONDENSER WATER MAKE-UP TANK

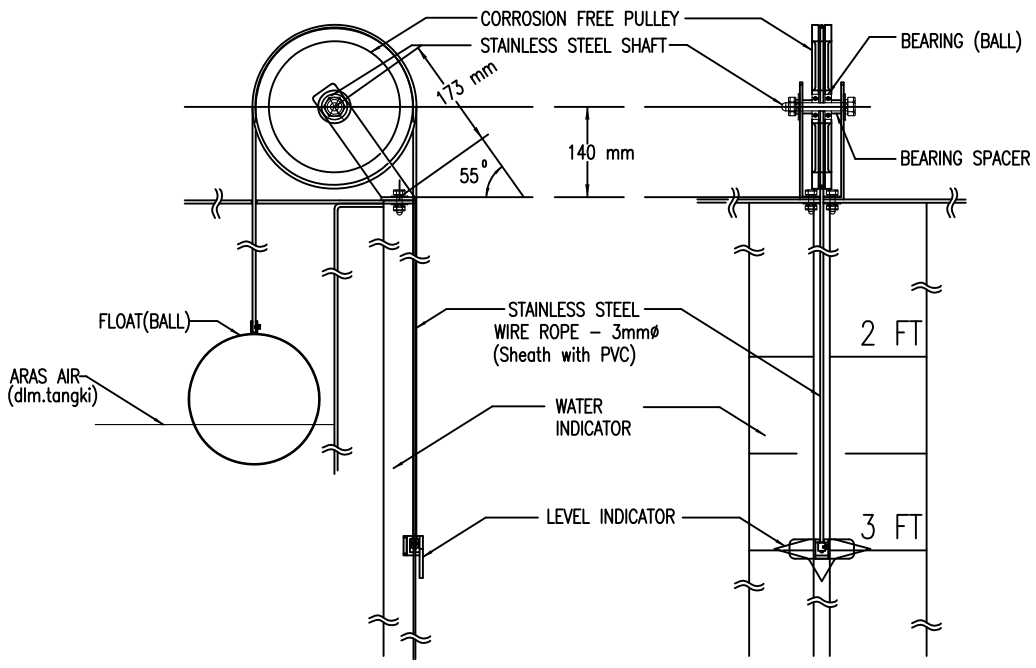

DETAIL OF INDICATOR LEVEL

NOTE:

LEGEND

GATE VALVE

JKR MEKANIKAL

JASA KEPADA RAKYAT

CAWANGAN KEJURUTERAAN MEKANIKAL
Ibu Pejabat JKR Malaysia

AIR CONDITIONING SYSTEM

DETAIL OF TYPICAL CONDENSER WATER MAKE-UP TANK

DATE	SCALE
2017	N.T.S

DRAWING NUMBER

CKM/STD/AC/PLANT/REV2017/14

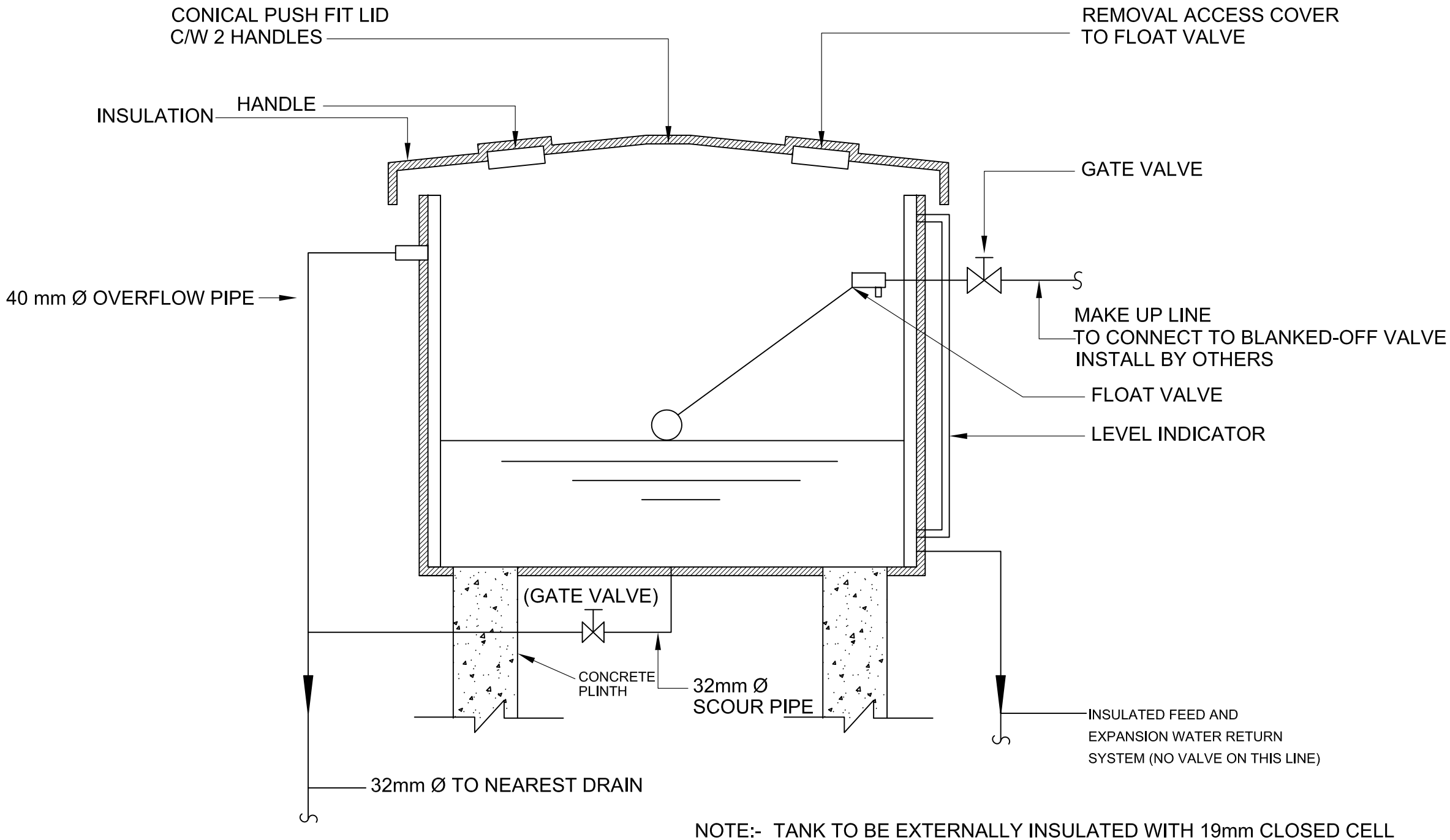

NOTE:- TANK TO BE EXTERNALLY INSULATED WITH 19mm CLOSED CELL NITRILE RUBBER SHEATHED WITH 22 SWG GALVANISED STEEL SHEET WITH AT LEAST WITH 2 LAYERS OF ANTI-RUST PAINTING.

TYPICAL CHILLED WATER EXPANSION TANK

NOTE:

JKR MEKANIKAL

JASA KEPADA RAKYAT

CAWANGAN KEJURUTERAAN MEKANIKAL
Ibu Pejabat JKR Malaysia

AIR CONDITIONING SYSTEM

CHILLED WATER EXPANSION TANK

DATE	SCALE
2017	N.T.S

DRAWING NUMBER

CKM/STD/AC/PLANT/REV2017/15

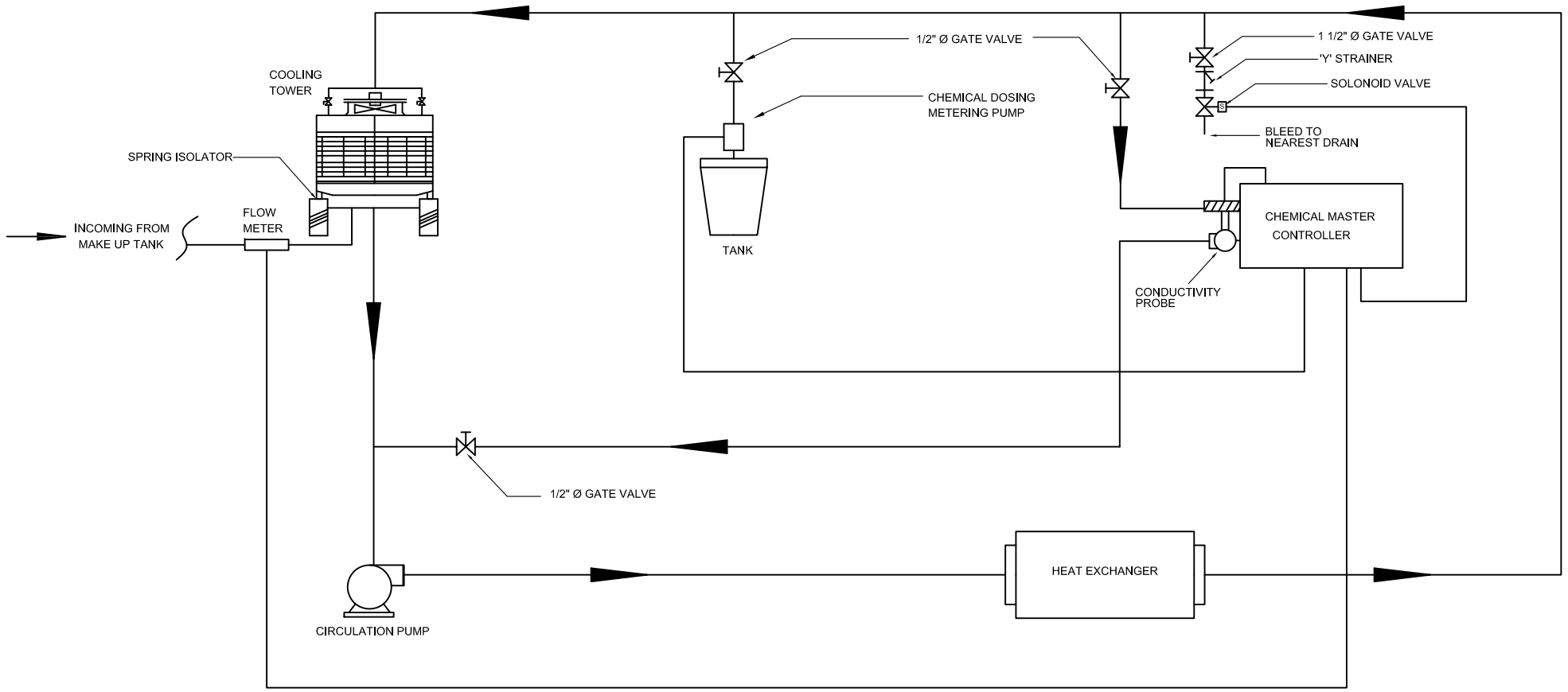

NOTE:-

1. THE CHEMICAL DOSING PUMP AND THE CONTROLLER SHALL BE MOUNTED ON THE WALL
2. THE 50 L HDPE CHEMICAL TANK, SHALL BE PLACED ON A PLATFORM
3. NUMBER OF CHEMICAL TANK TO BE DECIDED BY MECHANICAL CONTRACTOR

CONDENSER WATER TREATMENT FULLY AUTOMATIC DOSING SYSTEM

NOTE:

JKR MEKANIKAL

JASA KEPADA RAKYAT

CAWANGAN KEJURUTERAAN MEKANIKAL
Ibu Pejabat JKR Malaysia

AIR CONDITIONING SYSTEM

CONDENSER WATER TREATMENT
- FULLY AUTOMATIC DOSING SYSTEM

DATE	SCALE
2017	N.T.S

DRAWING NUMBER

CKM/STD/AC/PLANT/REV2017/16

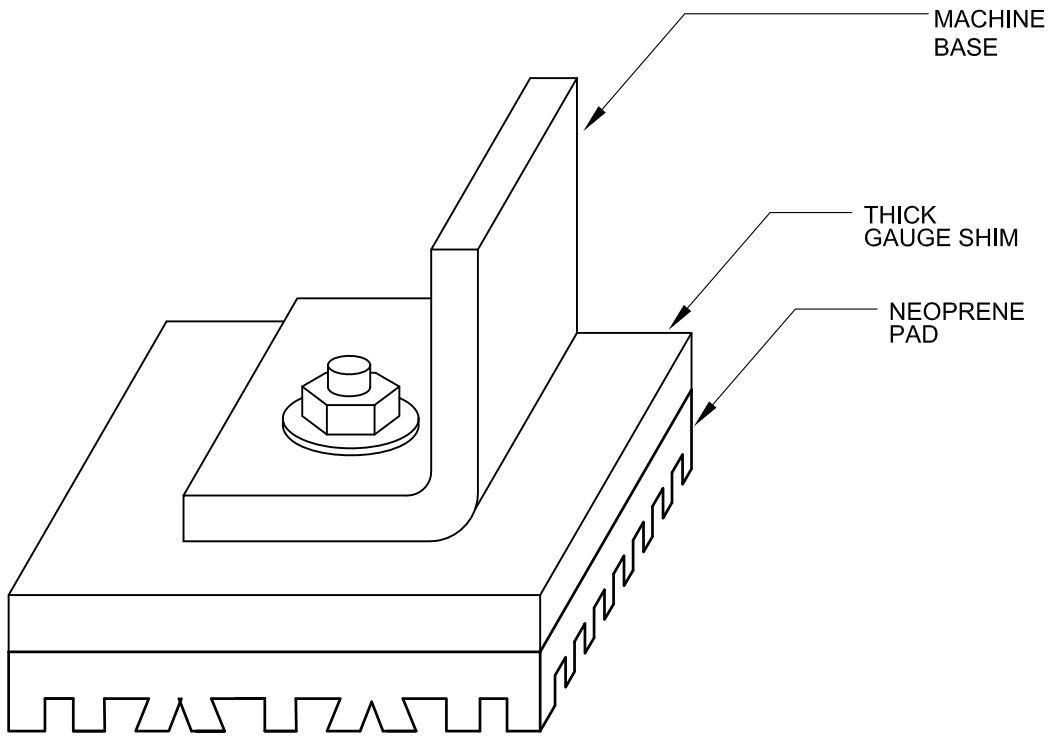

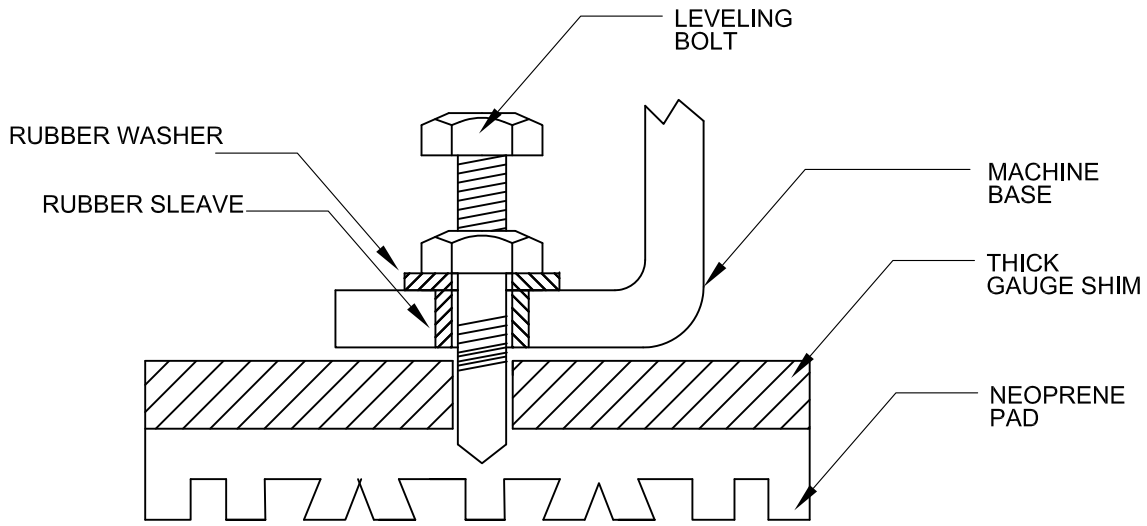

TYPICAL NEOPRENE PADS

NOTE:-

1. RUBBER WASHER SIZE AS PER MANUFACTURER RECOMMENDED OR REFER TECHNICAL SPECIFICATION
2. THICKNESS OF GAUGE SHIM & NEOPRENE PAD AS PER MANUFACTURE RECOMMENDED OR REFER TECHNICAL SPECIFICATION

NOTE:

JKR MEKANIKAL

JASA KEPADA RAKYAT

CAWANGAN KEJURUTERAAN MEKANIKAL
Ibu Pejabat JKR Malaysia

AIR CONDITIONING SYSTEM

TYPICAL NEOPRENE PADS

DATE	SCALE
2017	N.T.S

DRAWING NUMBER

CKM/STD/AC/PLANT/REV2017/17

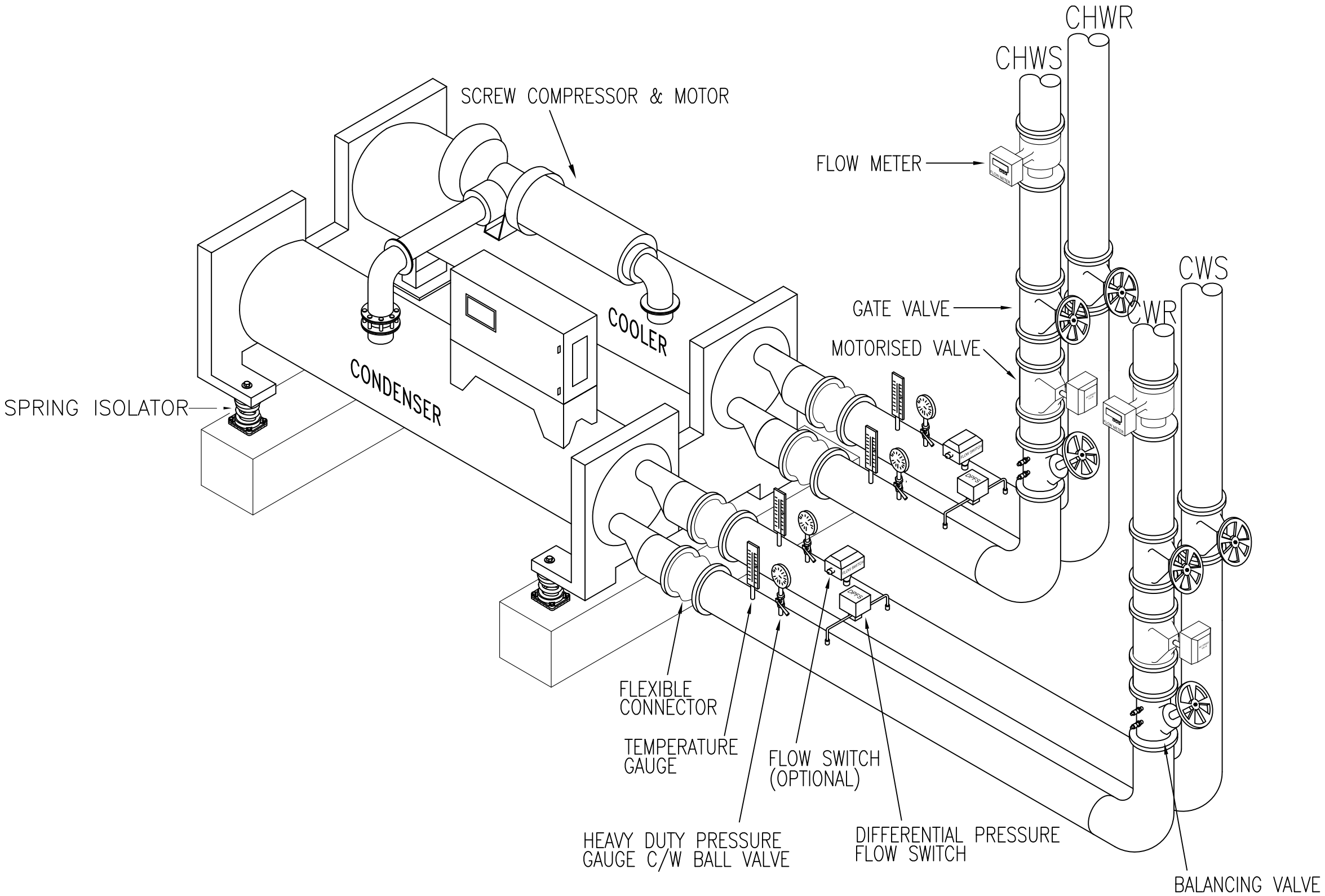

TYPICAL SCREW TYPE WATER-COOLED-CHILLER PIPING CONNECTION DETAILS

NOTE:

LEGEND

CHWS	CHILLED WATER SUPPLY
CHWR	CHILLED WATER RETURN
CWS	CONDENSER WATER SUPPLY
CWR	CONDENSER WATER RETURN

JKR MEKANIKAL

JASA KEPADA RAKYAT

CAWANGAN KEJURUTERAAN MEKANIKAL
Ibu Pejabat JKR Malaysia

AIR CONDITIONING SYSTEM

TYPICAL SCREW TYPE WATER COOLED-CHILLER PIPING CONNECTION DETAILS

DATE	SCALE
2017	N.T.S

DRAWING NUMBER

CKM/STD/AC/PLANT/REV2017/02

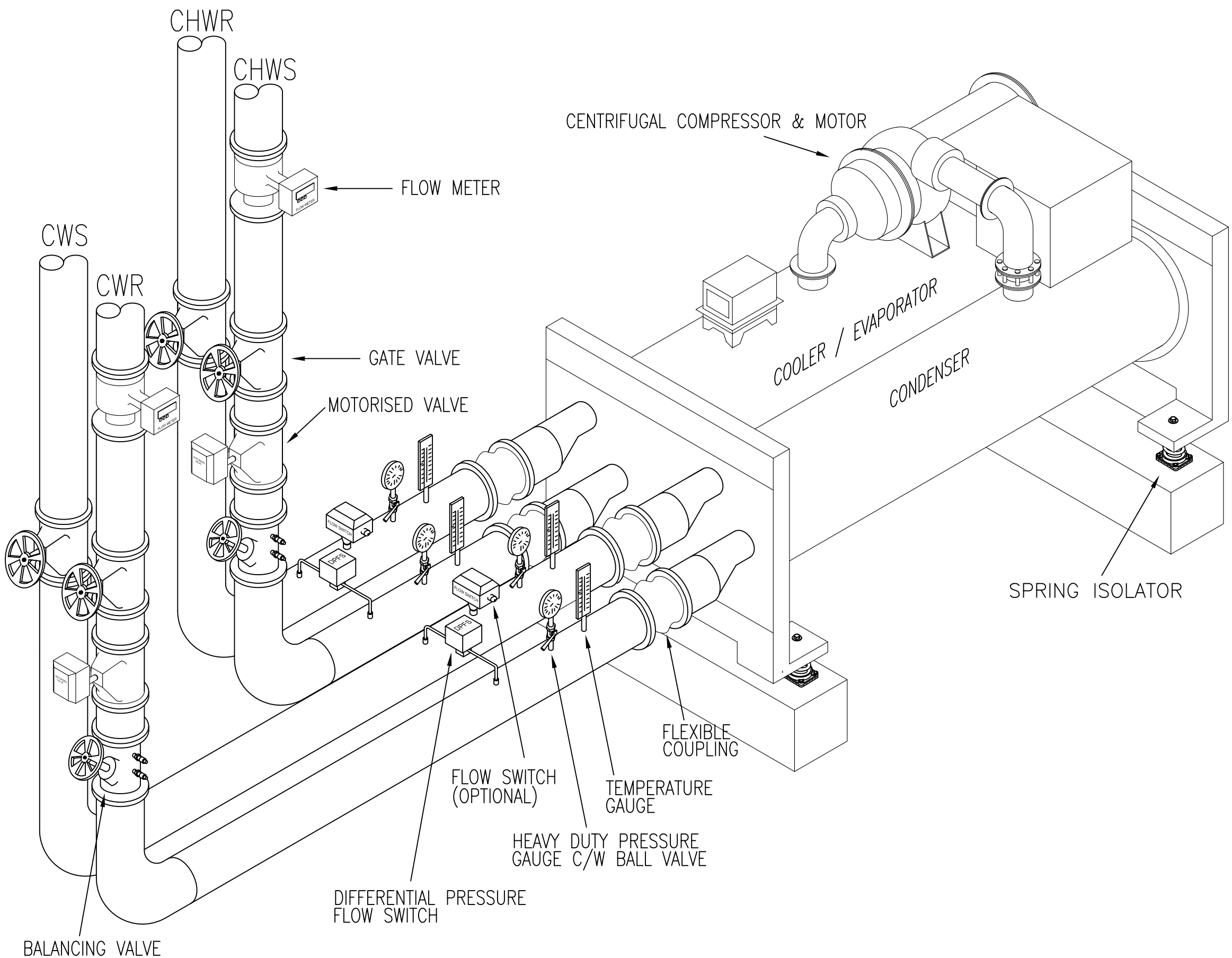

TYPICAL CENTRIFUGAL TYPE WATER-COOLED CHILLER PIPING CONNECTION DETAILS

NOTE:

LEGEND

CHWS	CHILLED WATER SUPPLY
CHWR	CHILLED WATER RETURN
CWS	CONDENSER WATER SUPPLY
CWR	CONDENSER WATER RETURN

JKR MEKANIKAL

JASA KEPADA RAKYAT

CAWANGAN KEJURUTERAAN MEKANIKAL
Ibu Pejabat JKR Malaysia

AIR CONDITIONING SYSTEM

TYPICAL CENTRIFUGAL TYPE WATER-COOLED CHILLER PIPING CONNECTION DETAILS

DATE	SCALE
2017	N.T.S

DRAWING NUMBER

CKM/STD/AC/PLANT/REV2017/03

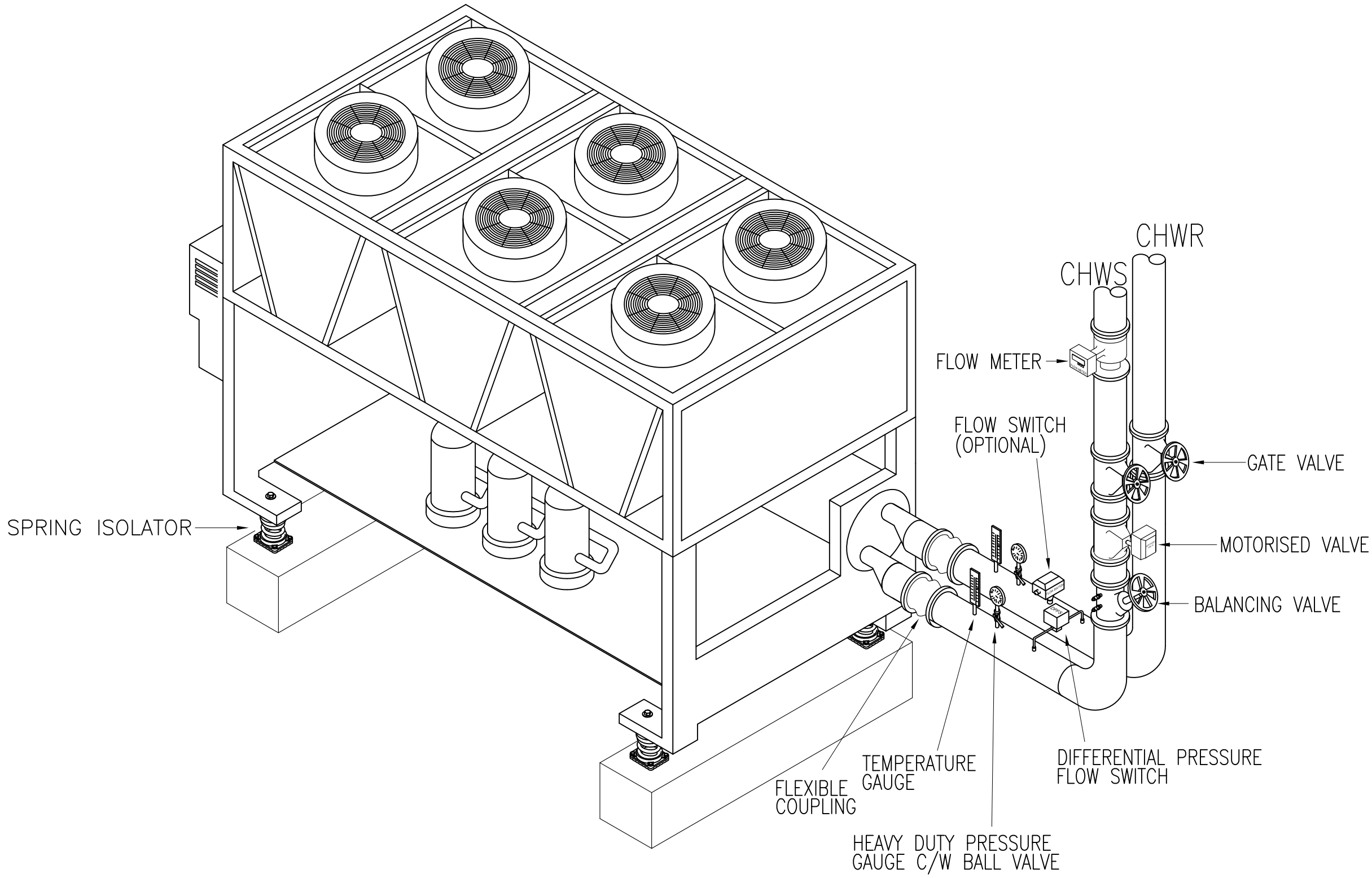

TYPICAL AIR-COOLED CHILLER PIPING CONNECTION DETAILS

NOTE:

LEGEND

CHWS	CHILLED WATER SUPPLY
CHWR	CHILLED WATER RETURN

JKR MEKANIKAL

JASA KEPADA RAKYAT

CAWANGAN KEJURUTERAAN MEKANIKAL
Ibu Pejabat JKR Malaysia

AIR CONDITIONING SYSTEM

TYPICAL AIR-COOLED CHILLER
PIPING CONNECTION DETAILS

DATE	SCALE
2017	N.T.S

DRAWING NUMBER

CKM/STD/AC/PLANT/REV2017/04

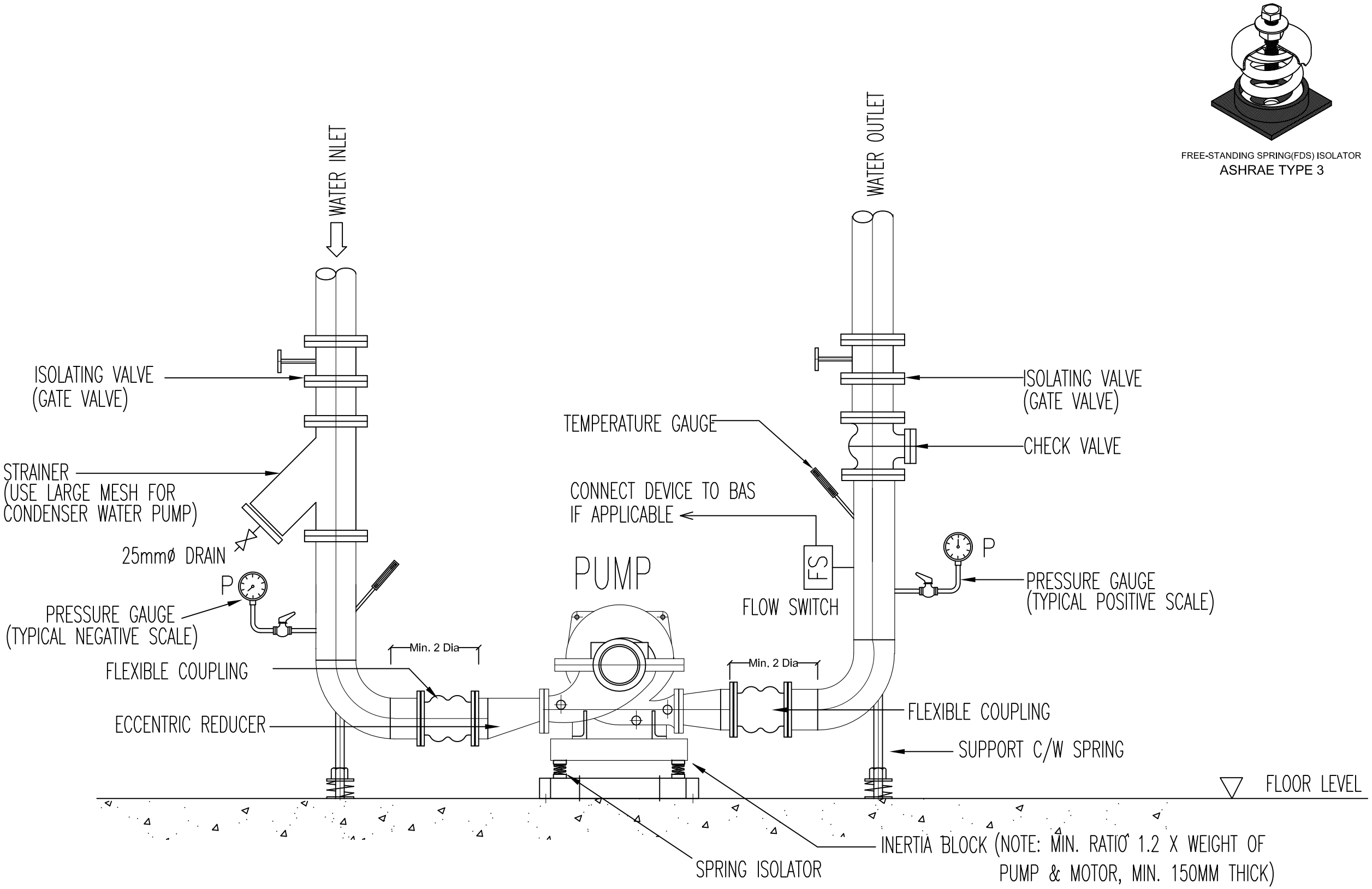

NOTE: REFER TECHNICAL SPECIFICATION FOR PIPE INSULATION DETAIL.

TYPICAL PUMP INSTALLATION DETAILS
(CWP/CHWP - HORIZONTAL SPLIT CASING)

NOTE:

JKR MEKANIKAL

JASA KEPADA RAKYAT

CAWANGAN KEJURUTERAAN MEKANIKAL
Ibu Pejabat JKR Malaysia

AIR CONDITIONING SYSTEM

TYPICAL PUMP INSTALLATION DETAILS

DATE	SCALE
2017	N.T.S

DRAWING NUMBER
CKM/STD/AC/PLANT/REV2017/05

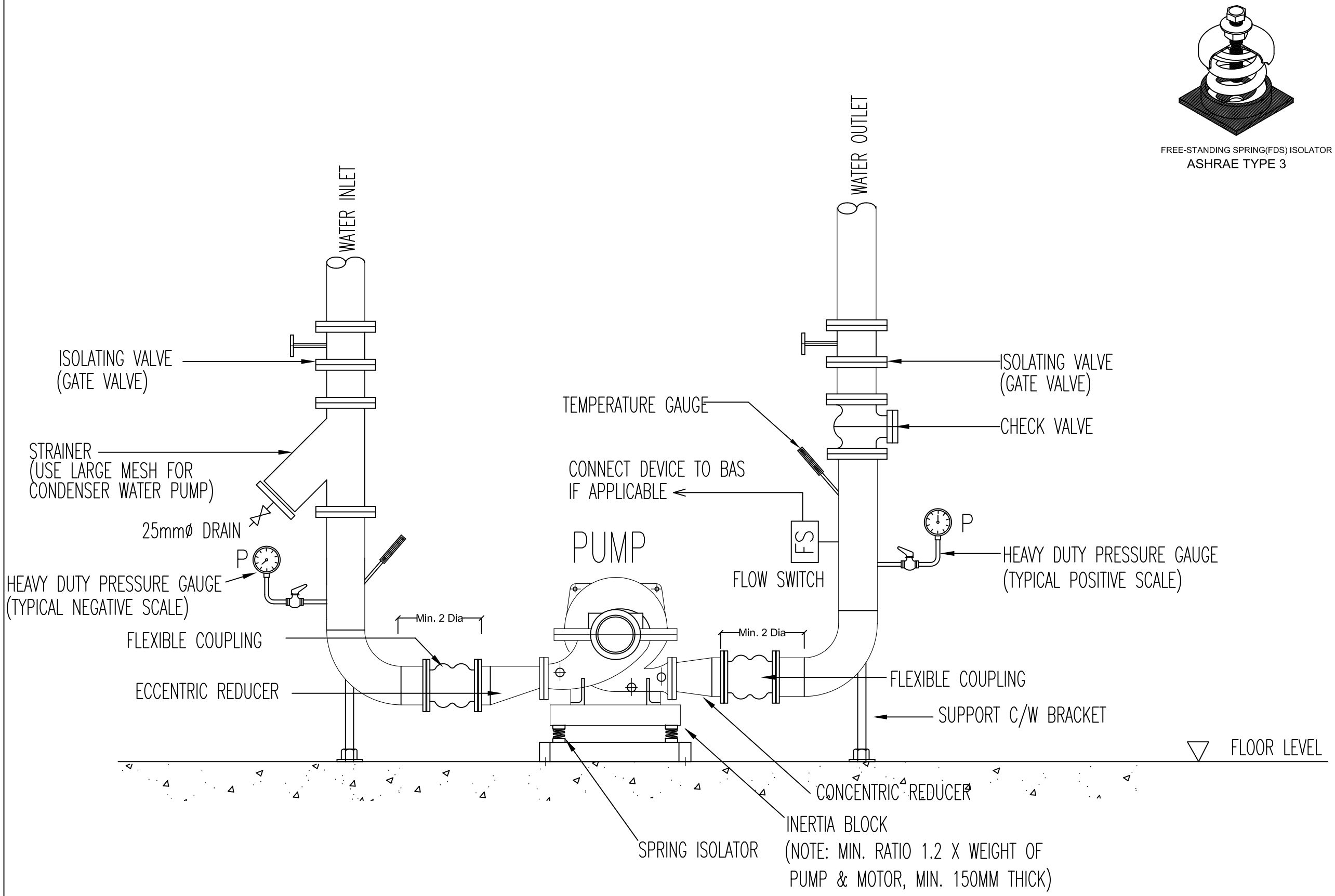

TYPICAL PUMP INSTALLATION DETAILS

(CWP/CHWP - HORIZONTAL SPLIT CASING)

NOTE:

JKR MEKANIKAL

JASA KEPADA RAKYAT

CAWANGAN KEJURUTERAAN MEKANIKAL
Ibu Pejabat JKR Malaysia

AIR CONDITIONING SYSTEM

TYPICAL PUMP INSTALLATION DETAILS

DATE	SCALE
2017	N.T.S

DRAWING NUMBER

CKM/STD/AC/PLANT/REV2017/06

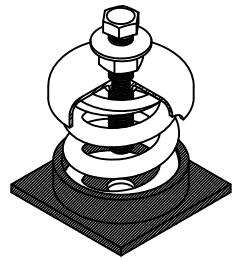

FREE-STANDING SPRING(FDS) ISOLATOR
ASHRAE TYPE 3

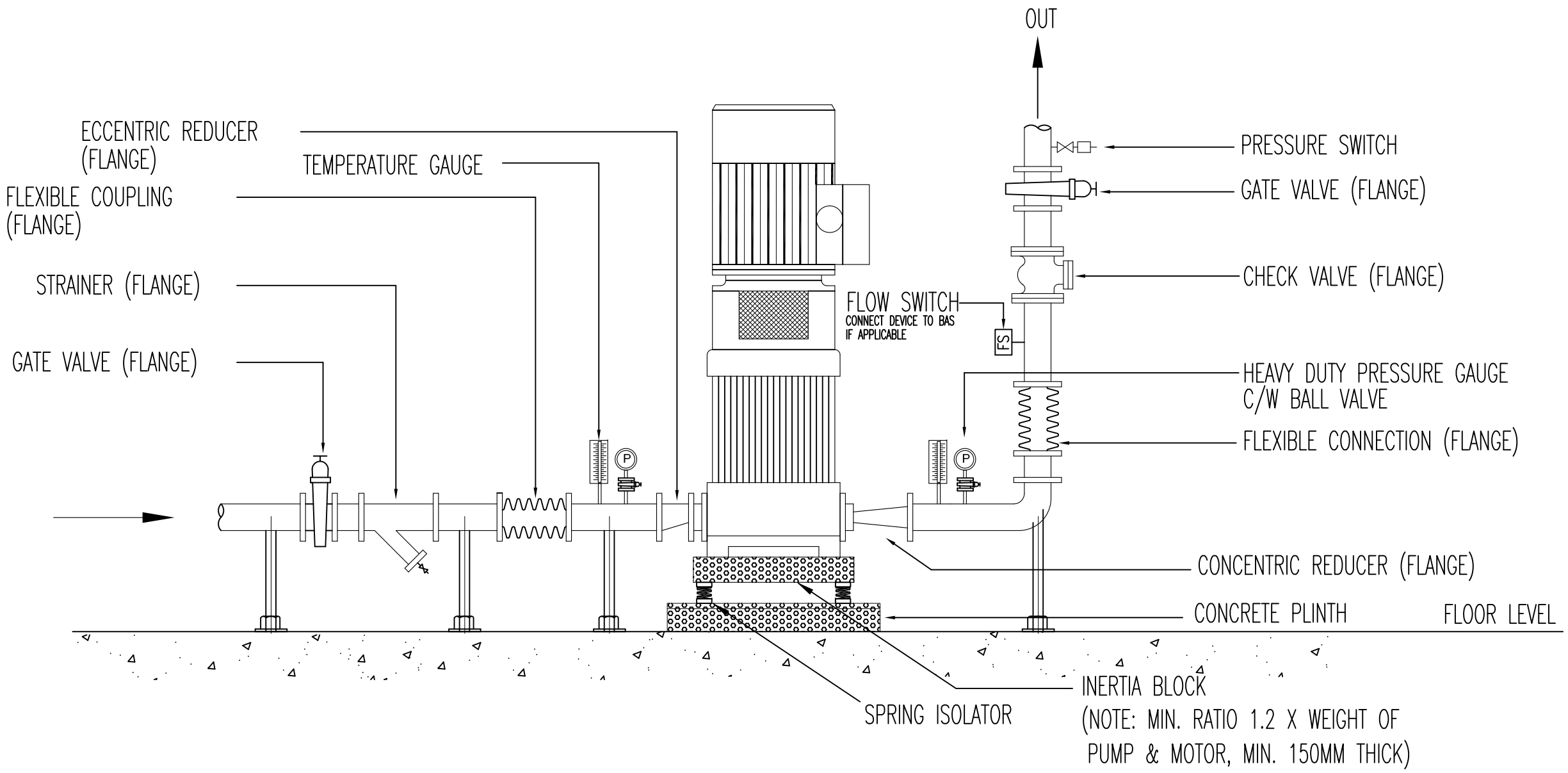

TYPICAL PUMP INSTALLATION DETAILS

(CWP/CHWP- Vertical Inline)

NOTE:

JKR MEKANIKAL

JASA KEPADA RAKYAT

CAWANGAN KEJURUTERAAN MEKANIKAL
Ibu Pejabat JKR Malaysia

AIR CONDITIONING SYSTEM

TYPICAL PUMP INSTALLATION DETAILS

DATE	SCALE
2017	N.T.S

DRAWING NUMBER
CKM/STD/AC/PLANT/REV2017/07

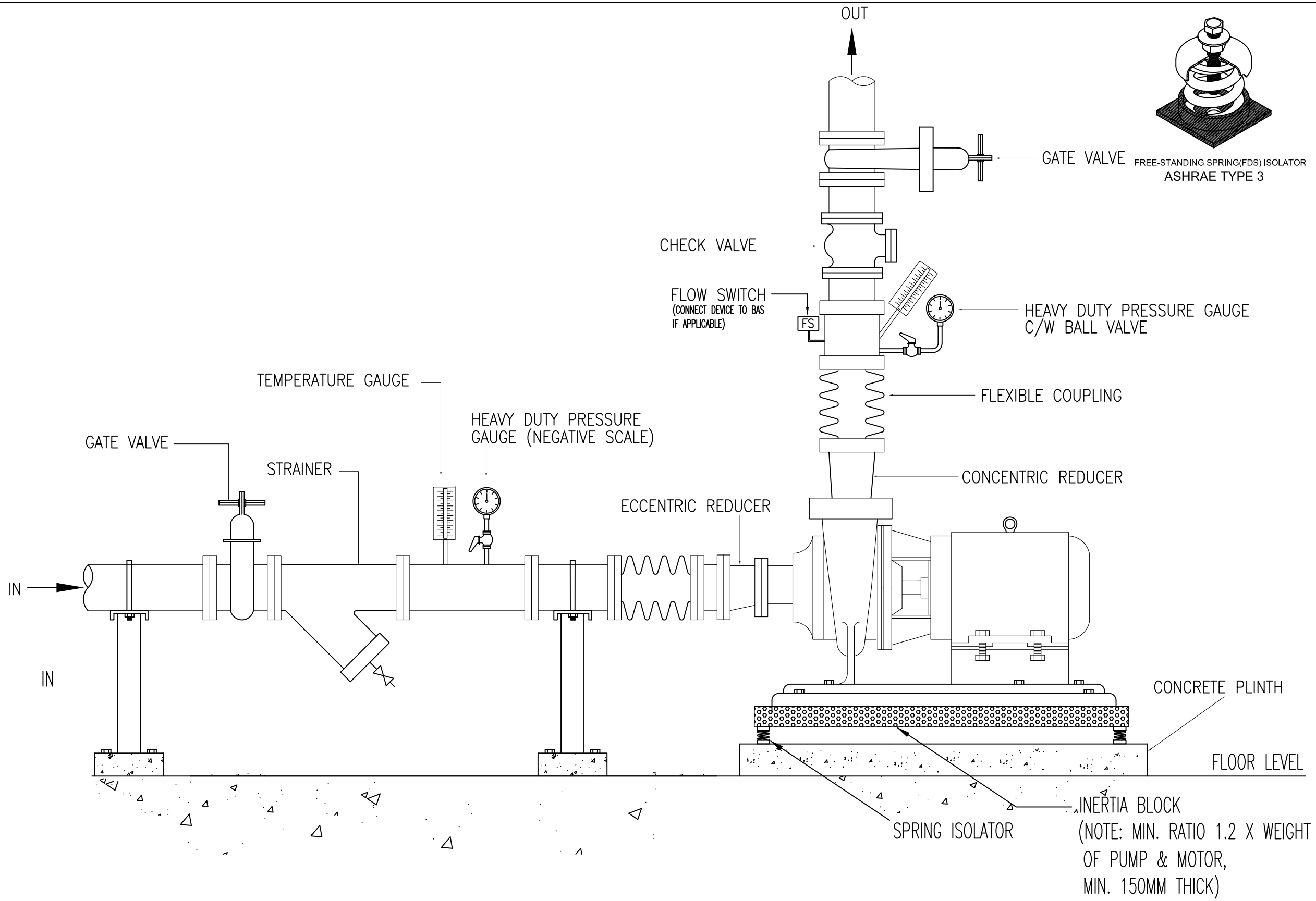

NOTE: REFER TECHNICAL SPECIFICATION FOR PIPE INSULATION DETAIL.

TYPICAL PUMP INSTALLATION DETAILS

(CWP/CHWP- End Suction)

NOTE:

JKR MEKANIKAL

JASA KEPADA RAKYAT

CAWANGAN KEJURUTERAAN MEKANIKAL
Ibu Pejabat JKR Malaysia

AIR CONDITIONING SYSTEM

TYPICAL PUMP INSTALLATION DETAILS

DATE	SCALE
2017	N.T.S

DRAWING NUMBER

CKM/STD/AC/PLANT/REV2017/08

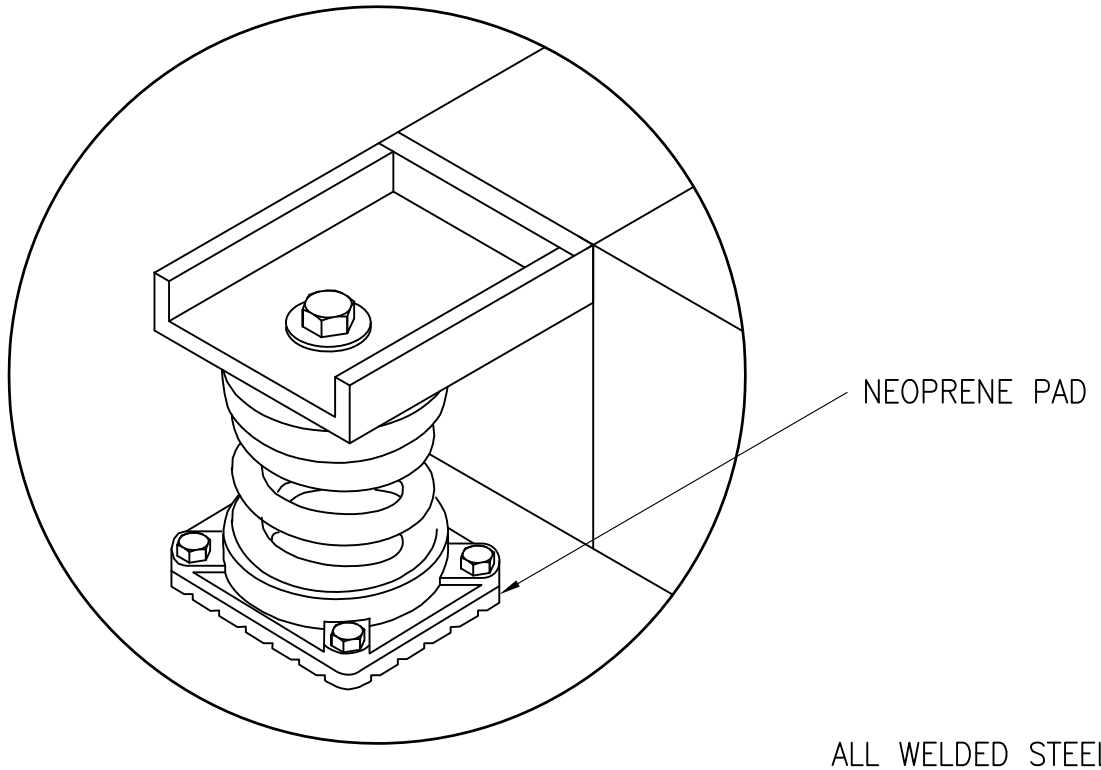

DETAIL A

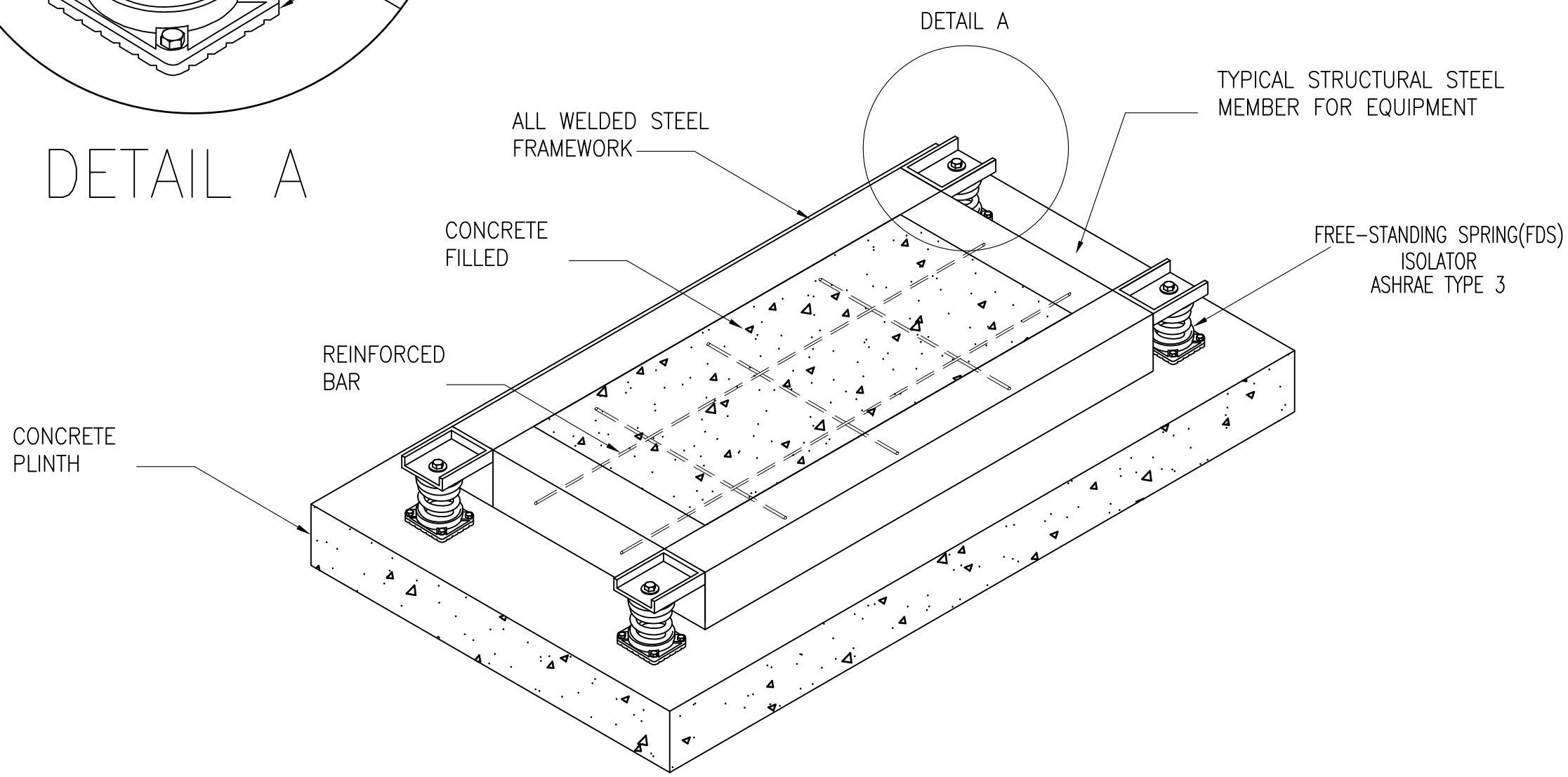

PUMP AND MOTOR BASE

Inertia Block – Operatian Weight Minima 1 :1.2

NOTE:

JKR MEKANIKAL

JASA KEPADA RAKYAT

CAWANGAN KEJURUTERAAN MEKANIKAL
Ibu Pejabat JKR Malaysia

AIR CONDITIONING SYSTEM

PUMP AND MOTOR BASE

DATE	SCALE
2017	N.T.S

DRAWING NUMBER

CKM/STD/AC/PLANT/REV2017/09

PIPE

JKR
MEKANIKAL

JASA KEPADA RAKYAT

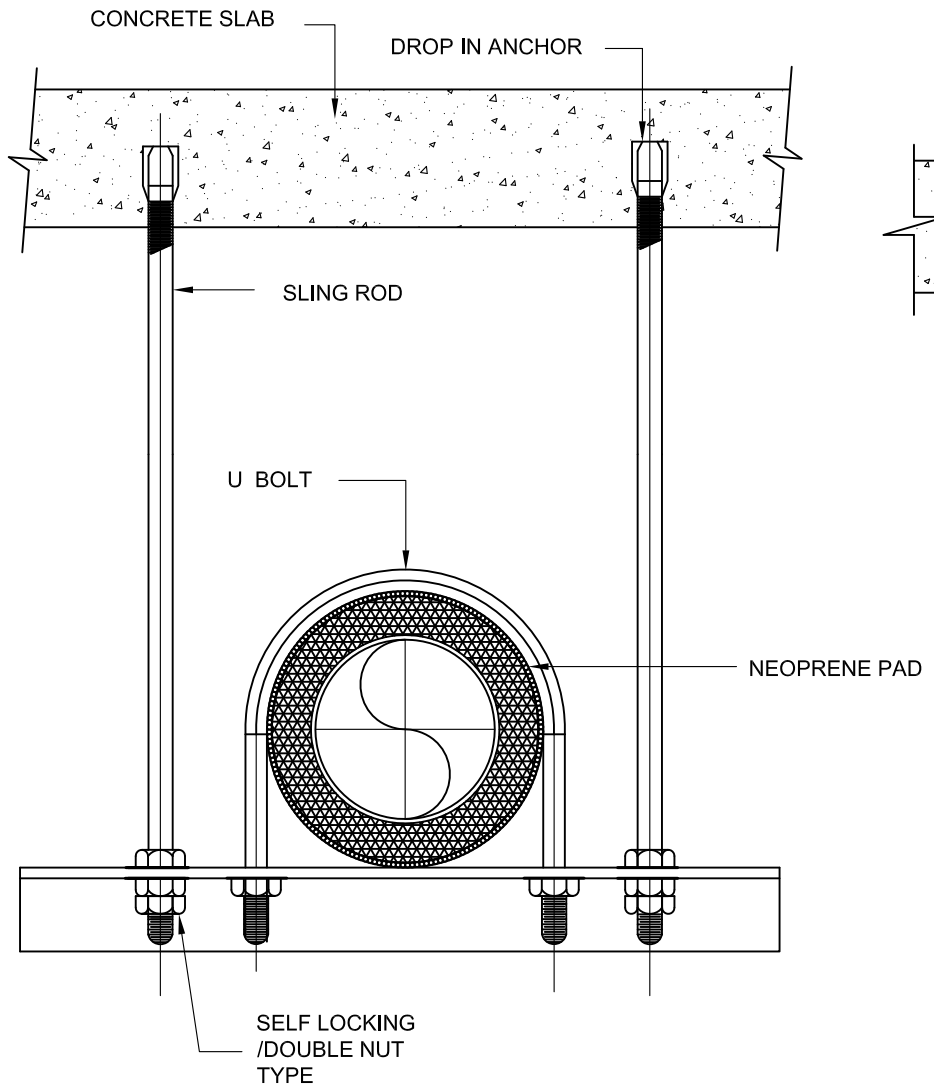

TYPICAL PIPE HANGER
(SINGLE PIPE)

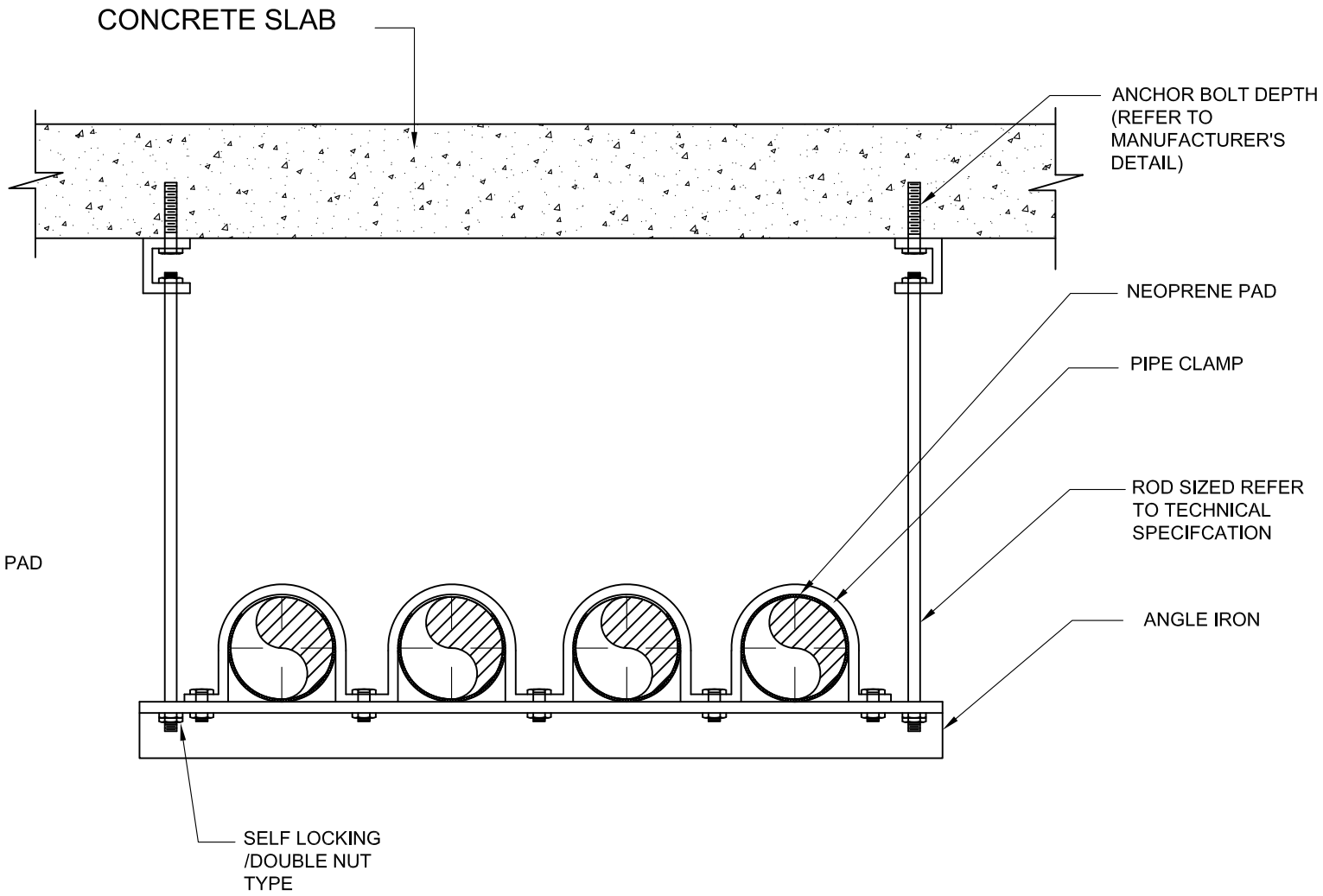

TYPICAL PIPE HANGER
(MORE THAN ONE PIPE)

PIPE HANGERS FOR INSULATED PIPE OUTSIDE MECHANICAL ROOM

NOTE:

JKR
MEKANIKAL

JASA KEPADA RAKYAT

CAWANGAN KEJURUTERAAN MEKANIKAL
Ibu Pejabat JKR Malaysia

AIR CONDITIONING SYSTEM

PIPE HANGERS FOR INSULATED PIPE
(OUTSIDE MECHANICAL ROOM)

DATE	SCALE
2017	N.T.S

DRAWING NUMBER
CKM/STD/AC/PIPE/REV2017/01

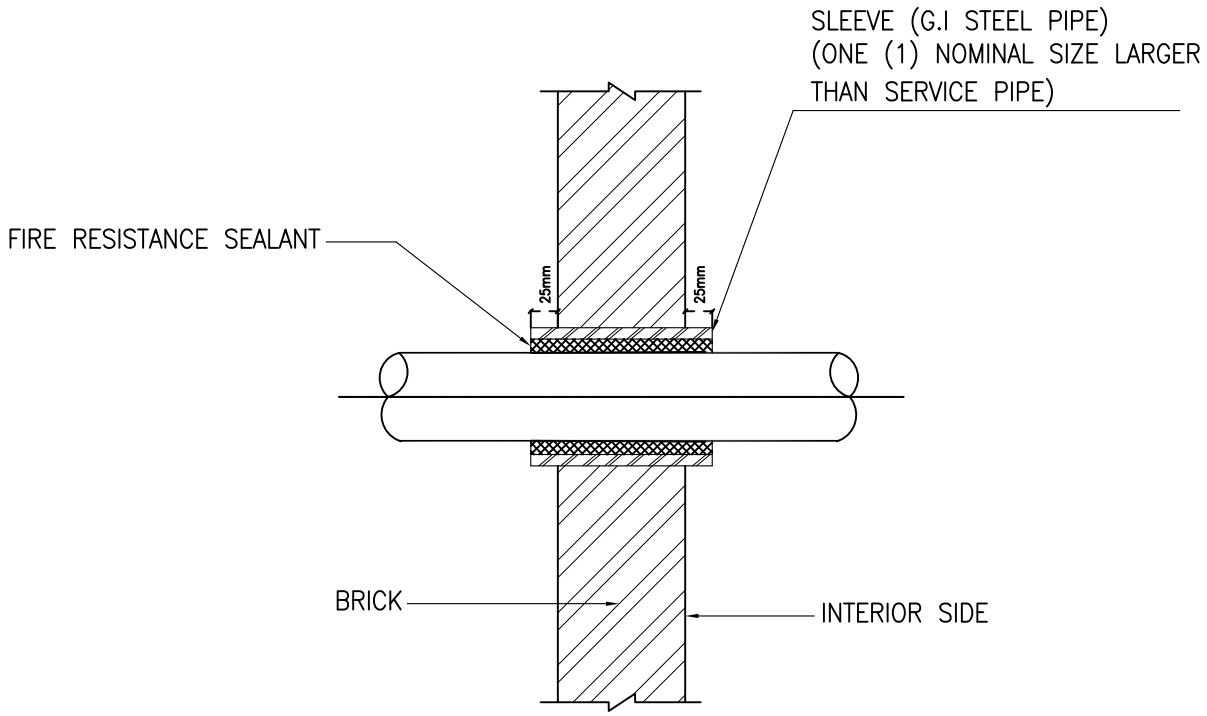

PIPE SLEEVE FOR PIPE THROUGH WALL

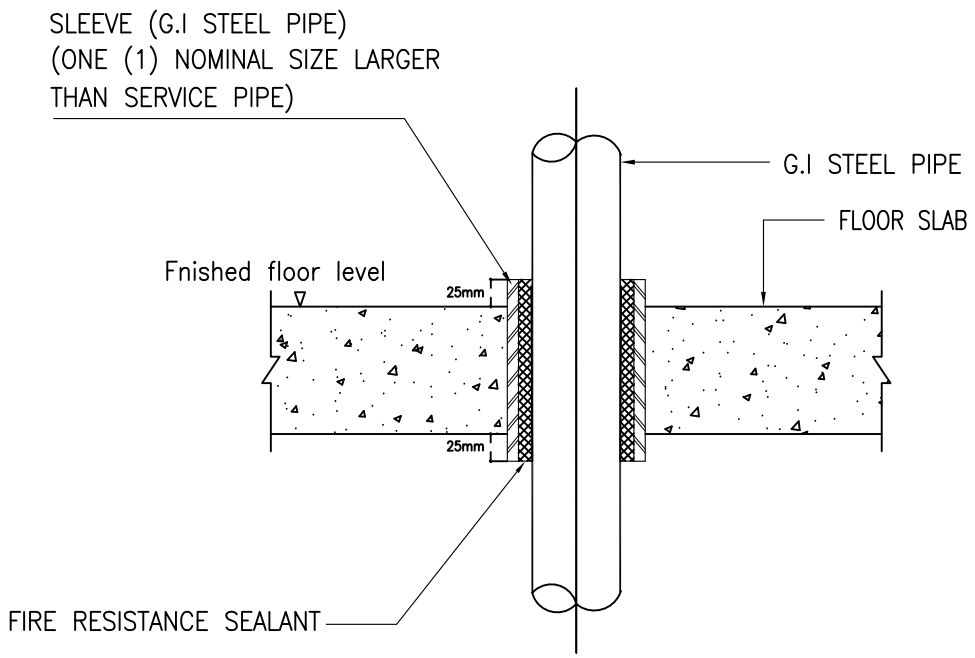

Notes:

1. Normal floor–the sleeves shall end 25mm above finished floor level.
2. Wet floor–the sleeves shall end 50mm above finished floor level.

PIPE SLEEVE FOR PIPE THROUGH FLOOR

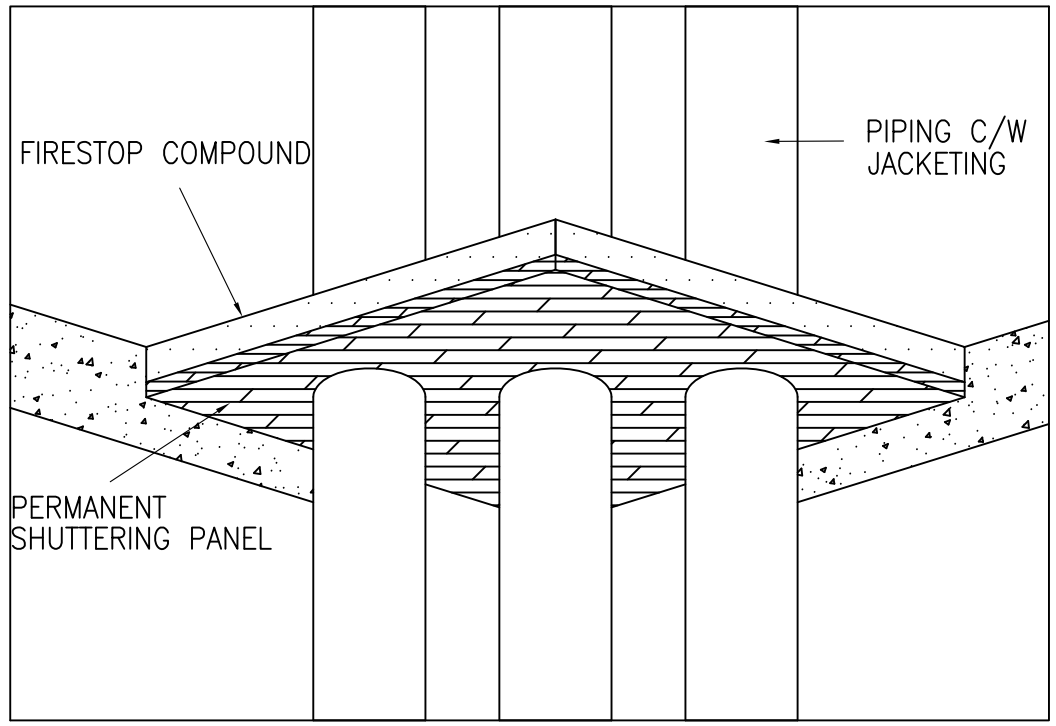

PIPE THROUGH FLOOR WITHOUT SLEEVE

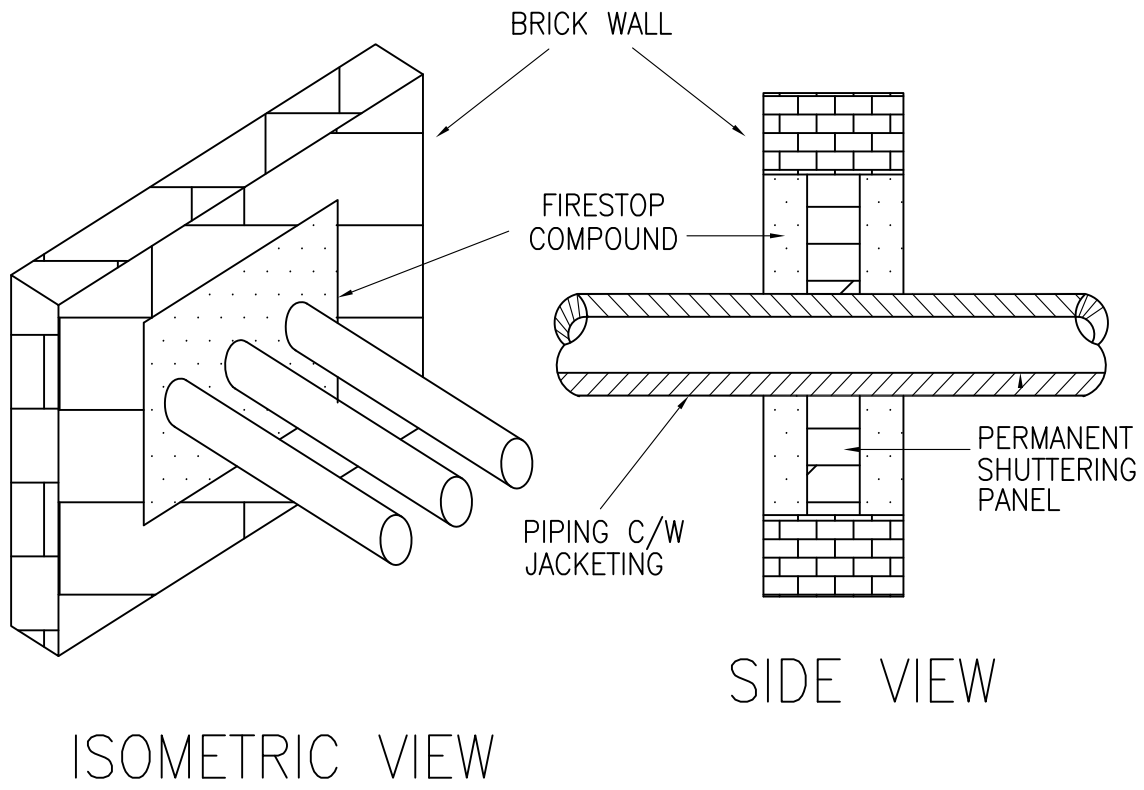

PIPE THROUGH WALL WITHOUT SLEEVE

NOTE:

JASA KEPADA RAKYAT

CAWANGAN KEJURUTERAAN MEKANIKAL
Ibu Pejabat JKR Malaysia

AIR CONDITIONING SYSTEM

DETAIL OF PIPES THROUGH WALLS AND FLOORS

DATE	SCALE
2017	N.T.S

DRAWING NUMBER

CKM/STD/AC/PIPE/REV2017/10

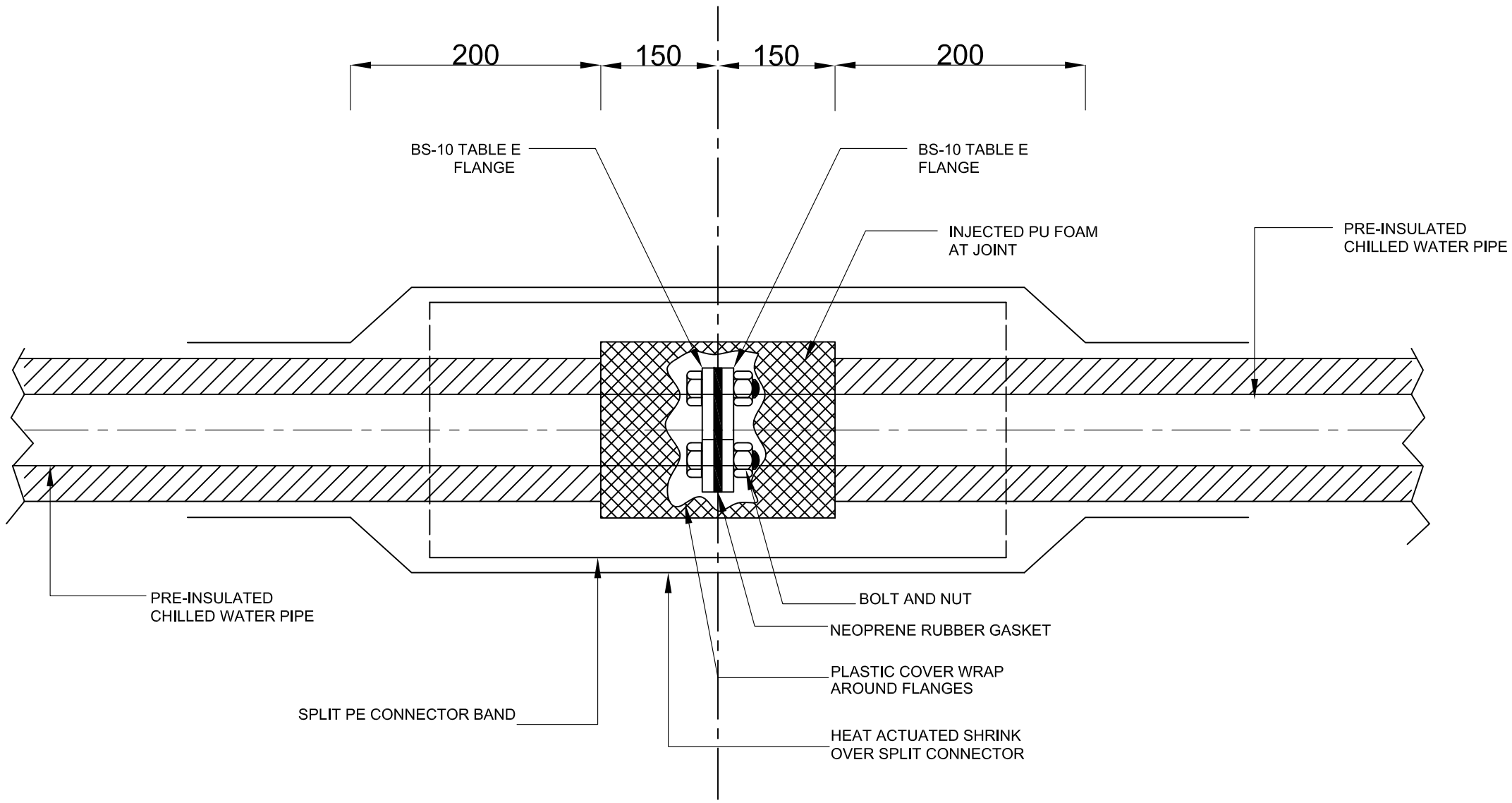

DETAIL OF JOINT FOR CHILLED WATER PIPE AT INTERFACING LINE

NOTE:

JKR MEKANIKAL

JASA KEPADA RAKYAT

CAWANGAN KEJURUTERAAN MEKANIKAL
Ibu Pejabat JKR Malaysia

AIR CONDITIONING SYSTEM

DETAIL OF JOINT FOR CHILLED WATER PIPE AT INTERFACING LINE

DATE	SCALE
2017	N.T.S

DRAWING NUMBER

CKM/STD/AC/PIPE/REV2017/11

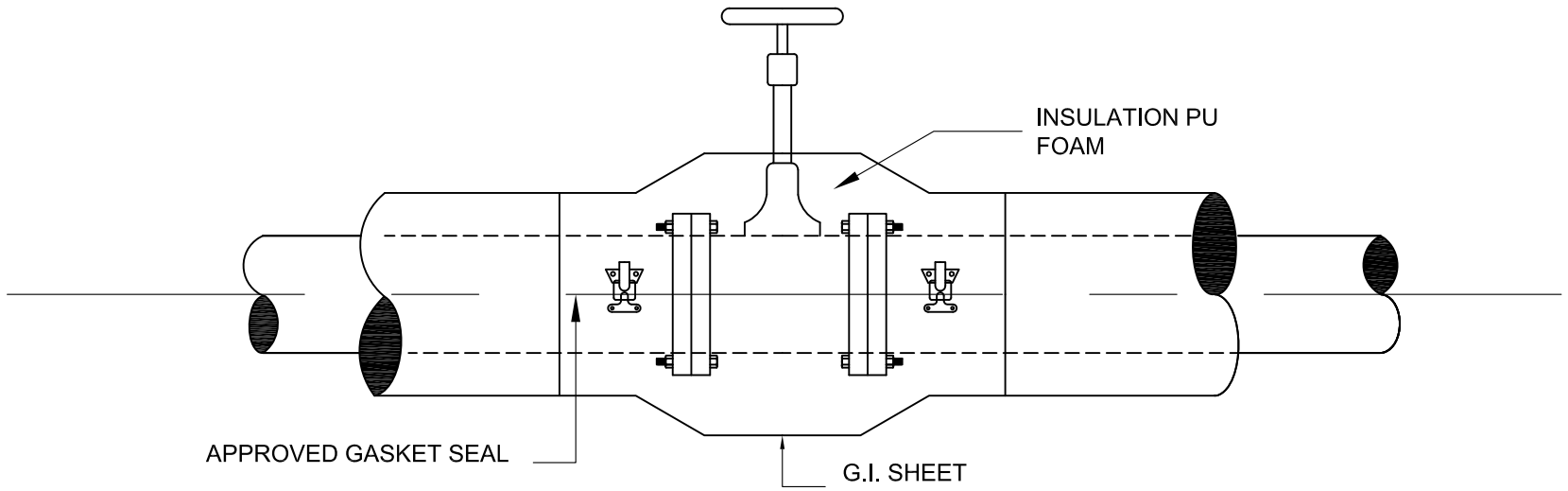

NOTE:

1. APPLICABLE FOR ALL CHILLED WATER VALVES, CONTROL VALVES, STRAINERS, BY PASS VALVES ETC.

TYPICAL CHILLED WATER VALVE INSULATION DETAILS

NOTE:

JKR MEKANIKAL

JASA KEPADA RAKYAT

CAWANGAN KEJURUTERAAN MEKANIKAL
Ibu Pejabat JKR Malaysia

AIR CONDITIONING SYSTEM

TYPICAL CHILLED WATER VALVE INSULATION DETAILS

DATE	SCALE
2017	N.T.S

DRAWING NUMBER

CKM/STD/AC/PIPE/REV2017/12

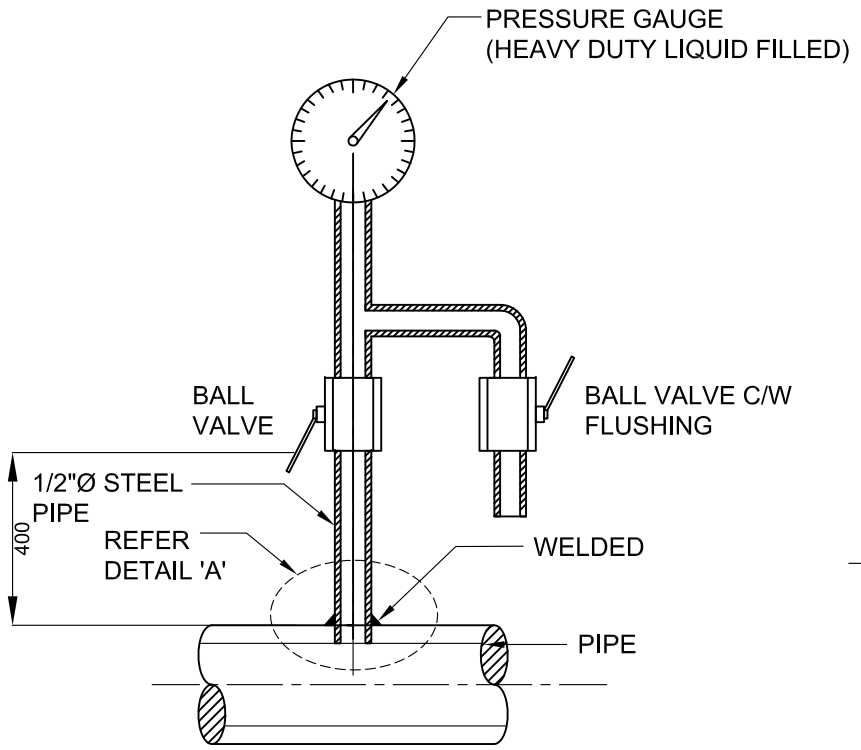

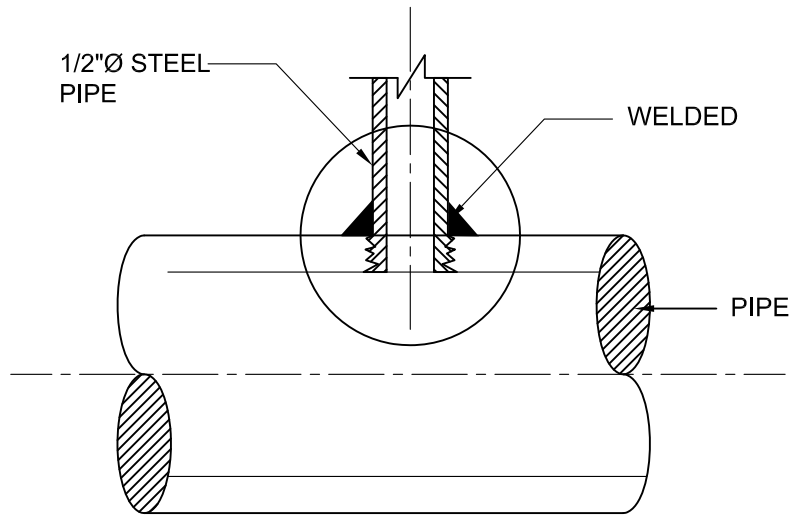

DETAIL 'A'

PRESSURE GAUGE ATTACHMENT DETAIL

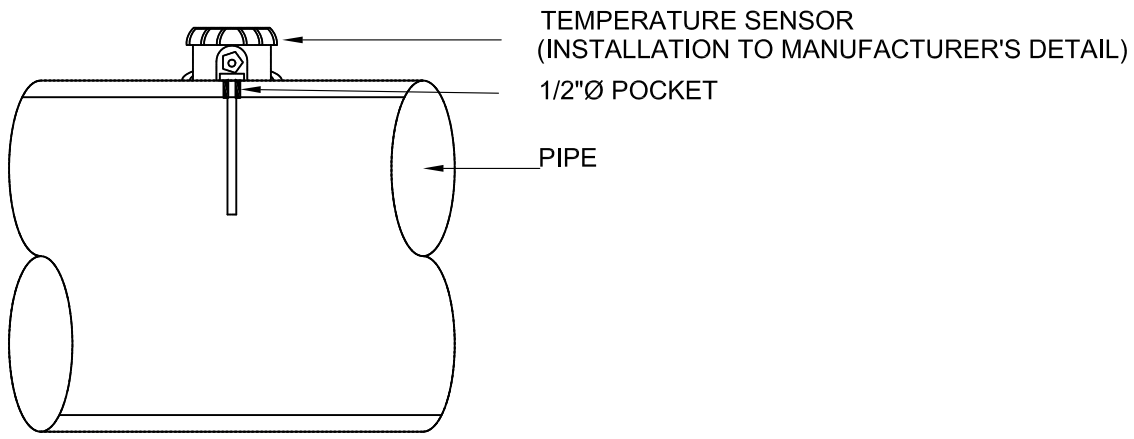

TEMPERATURE SENSOR INSTALLATION

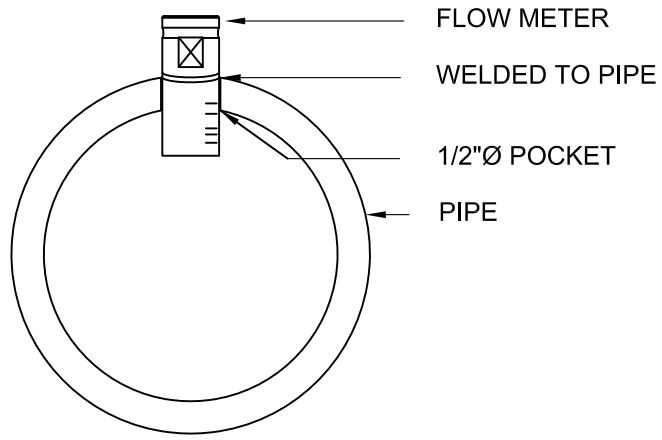

FLOW METER INSTALLATION

NOTE:

JKR MEKANIKAL

JASA KEPADA RAKYAT

CAWANGAN KEJURUTERAAN MEKANIKAL
Ibu Pejabat JKR Malaysia

AIR CONDITIONING SYSTEM

DETAIL OF CHILLED WATER PIPE FITTING INSTALLATION

DATE	SCALE
2017	N.T.S

DRAWING NUMBER

CKM/STD/AC/PIPE/REV2017/13

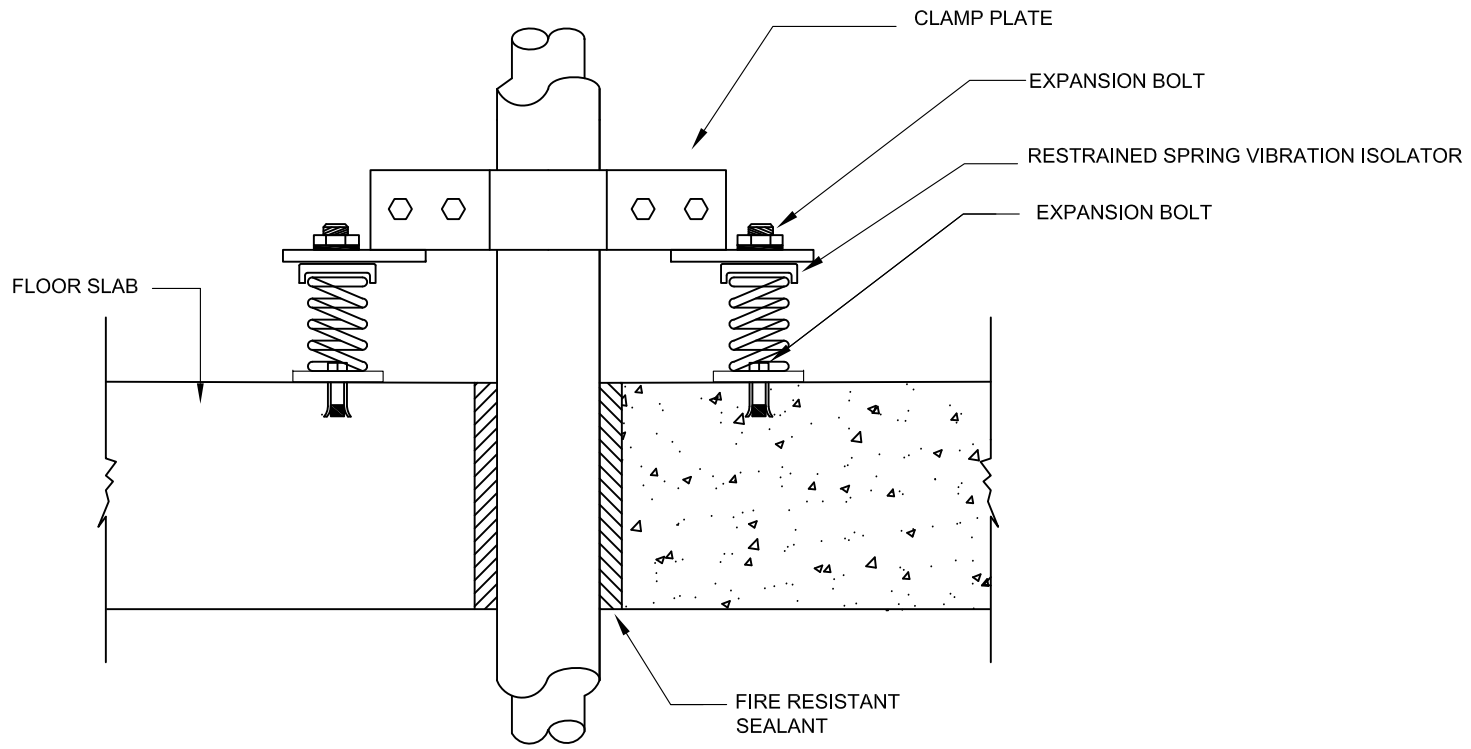

TYPICAL FIRST VERTICAL PIPE RISER THROUGH FLOOR SLAB MOUNTING DETAILS

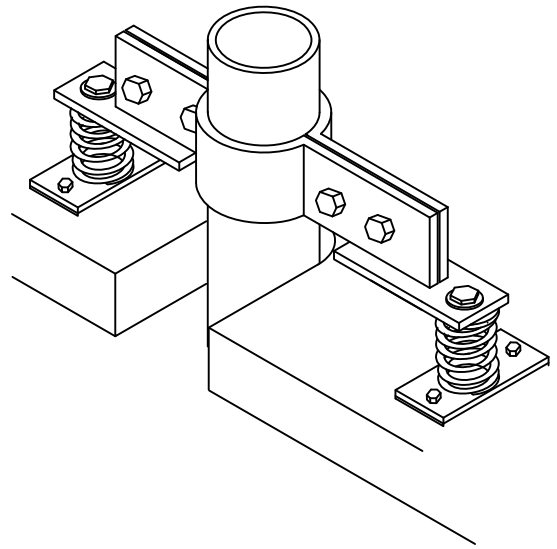

ISOMETRIC VIEW

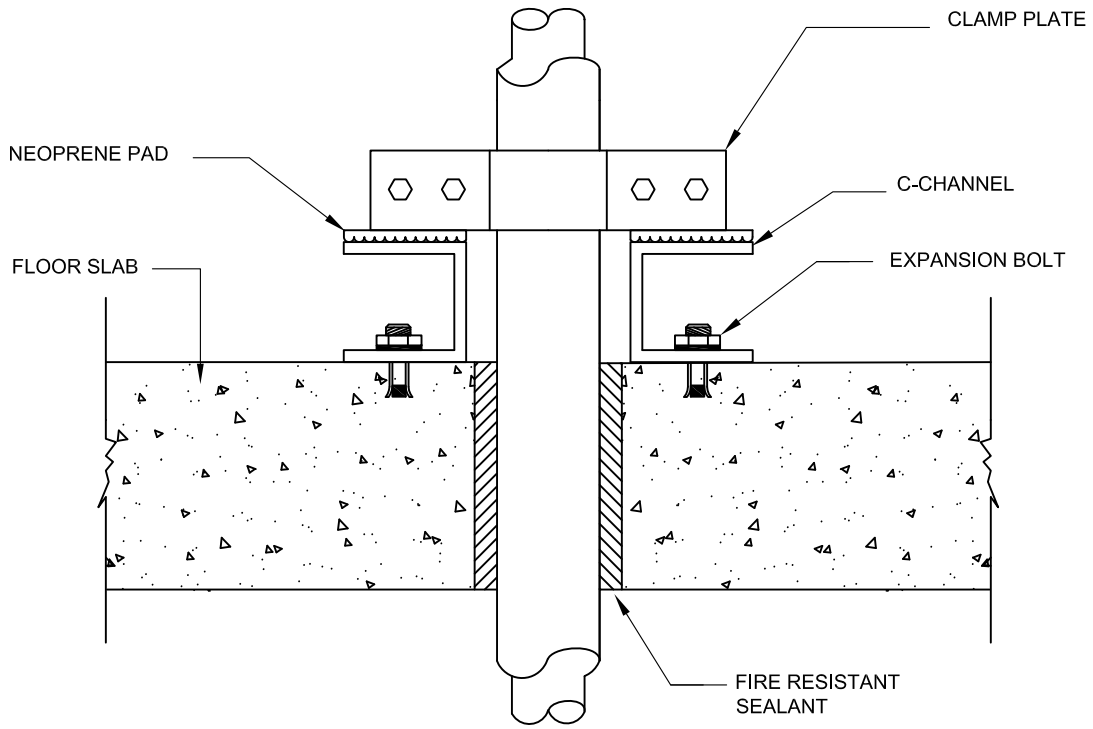

TYPICAL REMAINING VERTICAL PIPE RISER THROUGH FLOOR SLAB MOUNTING DETAILS

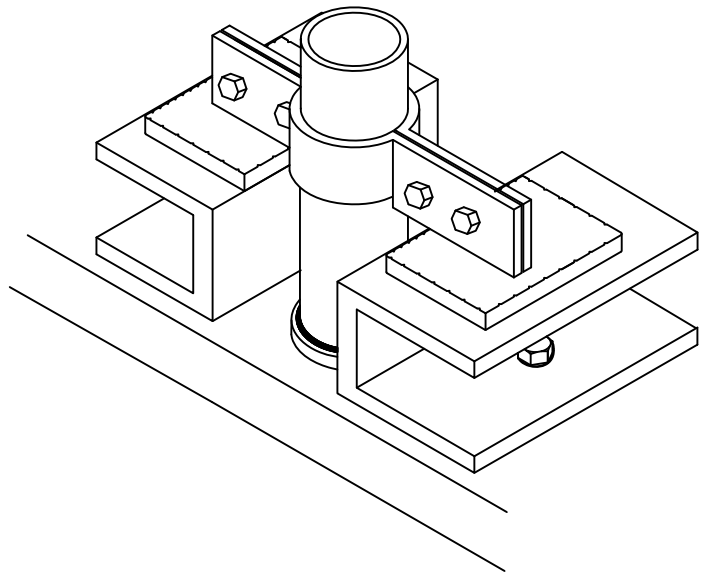

ISOMETRIC VIEW

NOTE:

JASA KEPADA RAKYAT

CAWANGAN KEJURUTERAAN MEKANIKAL
Ibu Pejabat JKR Malaysia

AIR CONDITIONING SYSTEM

PIPE RISER THROUGH FLOOR SLAB MOUNTING DETAILS

DATE	SCALE
2017	N.T.S

DRAWING NUMBER

CKM/STD/AC/PIPE/REV2017/14

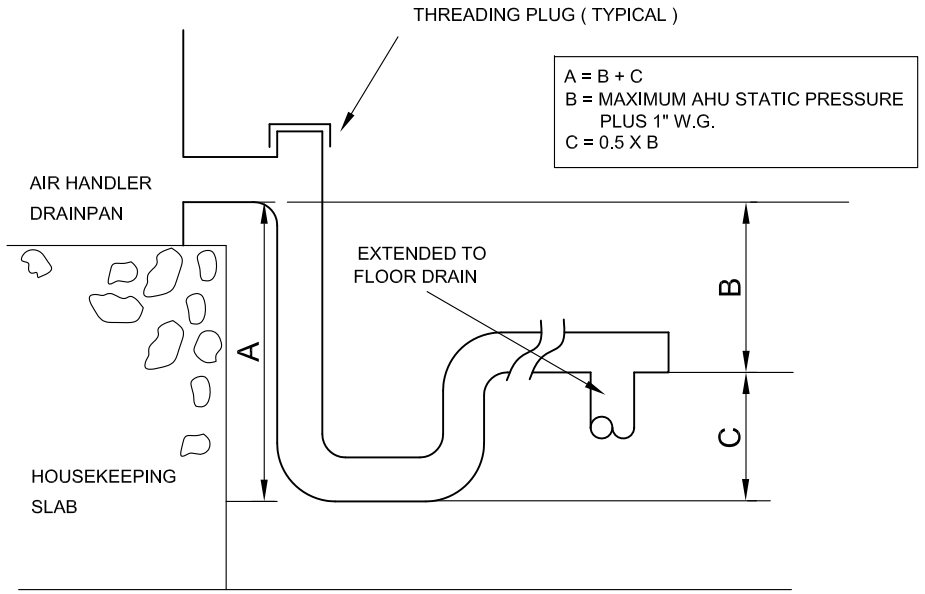

DRAIN TRAP FOR COIL SUBJECTED
TO NEGATIVE PRESSURE

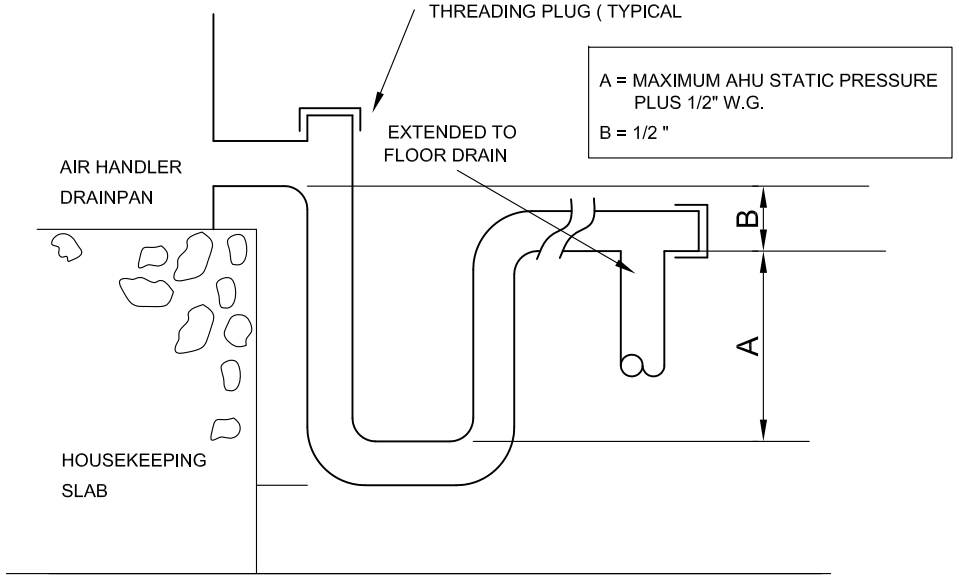

DRAIN TRAP FOR COIL SUBJECTED
TO POSITIVE PRESSURE

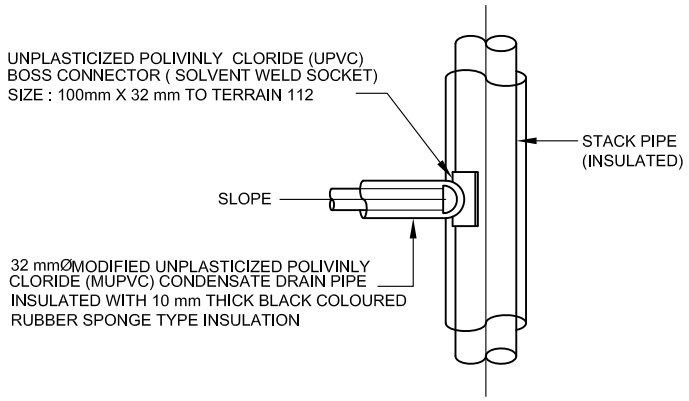

TYPICAL DETAIL OF A/C CONDENSATE DRAIN
PIPE CONNECTED TO UPVC STACK PIPE.

NOTE:

JKR
MEKANIKAL

JASA KEPADA RAKYAT

CAWANGAN KEJURUTERAAN MEKANIKAL
Ibu Pejabat JKR Malaysia

AIR CONDITIONING SYSTEM

CONDENSATE DRAIN DETAIL

DATE	SCALE
2017	N.T.S

DRAWING NUMBER
CKM/STD/AC/PIPE/REV2017/15

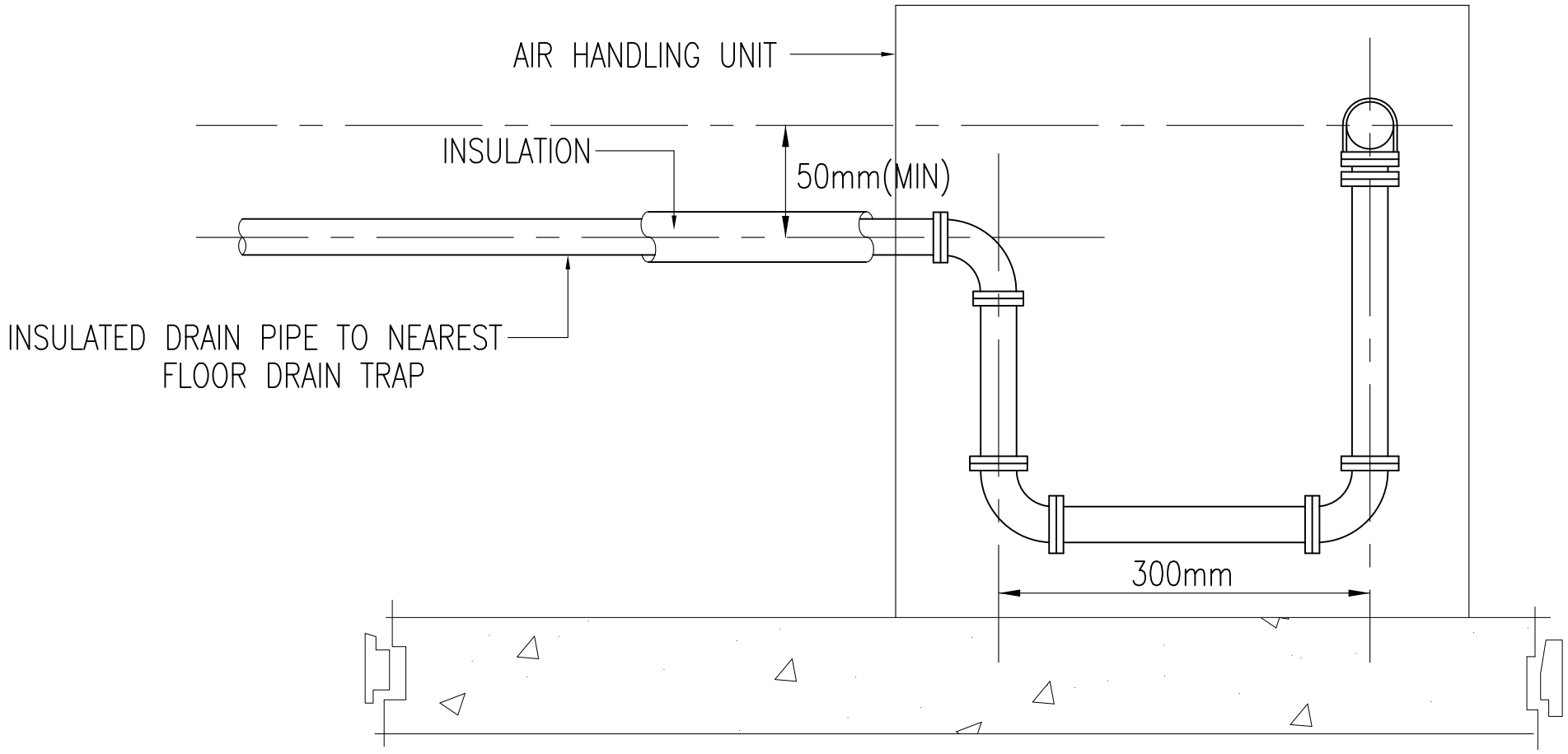

AHU/FCU CAPACITY (kW)	SIZE OF DRAIN PIPE (MM)
LESS 7 kW	19
7 TO 35	25
36 TO 106	32
107 TO 176	48
177 TO 616	50

CONDENSATE DRAIN DETAIL

NOTE:

JKR MEKANIKAL

JASA KEPADA RAKYAT

CAWANGAN KEJURUTERAAN MEKANIKAL
Ibu Pejabat JKR Malaysia

AIR CONDITIONING SYSTEM

CONDENSATE DRAIN DETAIL

DATE	SCALE
2017	N.T.S

DRAWING NUMBER

CKM/STD/AC/PIPE/REV2017/16

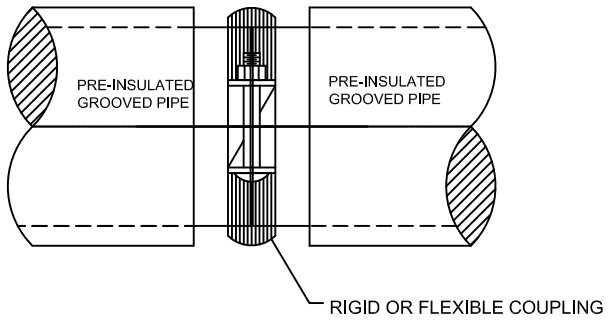

TYPICAL 65 mm TO 300 mm
CHW PIPE TO PIPE
CONNECTION

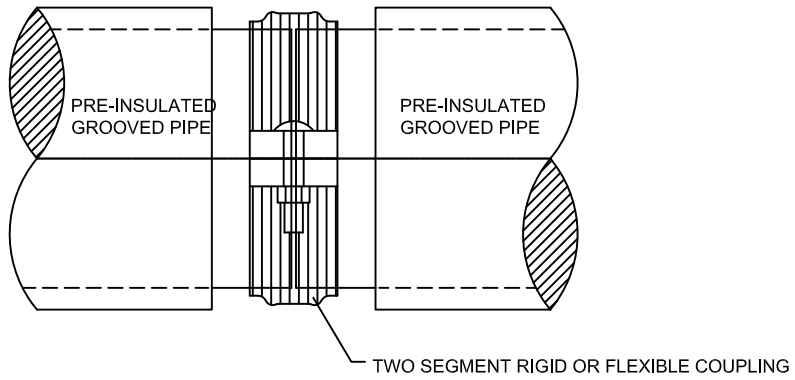

TYPICAL 350 mm AND ABOVE
CHW PIPE TO PIPE
CONNECTION

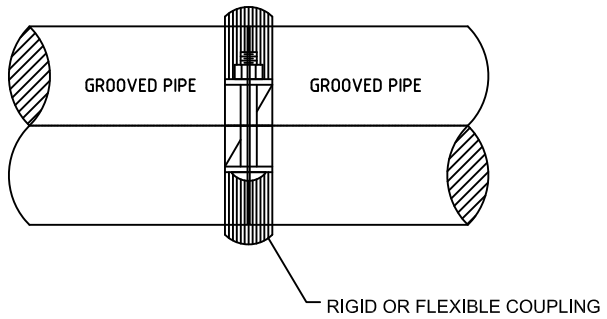

TYPICAL 65 mm TO 300 mm
CW PIPE TO PIPE
CONNECTION

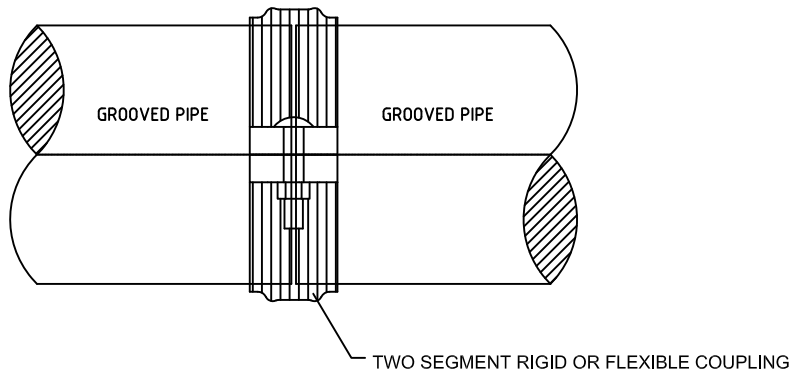

TYPICAL 350 mm AND ABOVE
CW PIPE TO PIPE
CONNECTION

NOTE:

JASA KEPADA RAKYAT

CAWANGAN KEJURUTERAAN MEKANIKAL
Ibu Pejabat JKR Malaysia

AIR CONDITIONING SYSTEM

PIPE MECHANICAL JOINT COUPLING

DATE	SCALE
2017	N.T.S

DRAWING NUMBER
CKM/STD/AC/PIPE/REV2017/17

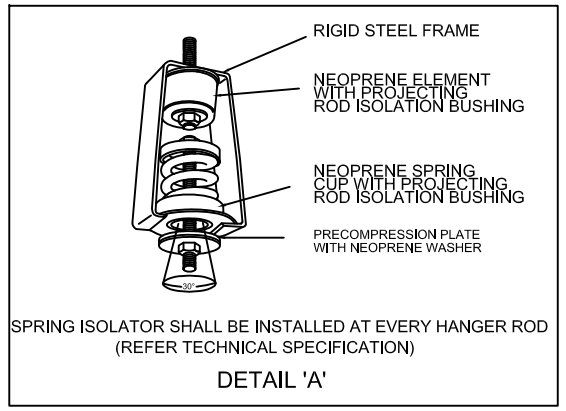

SPRING ISOLATOR SHALL BE INSTALLED AT EVERY HANGER ROD (REFER TECHNICAL SPECIFICATION)

DETAIL 'A'

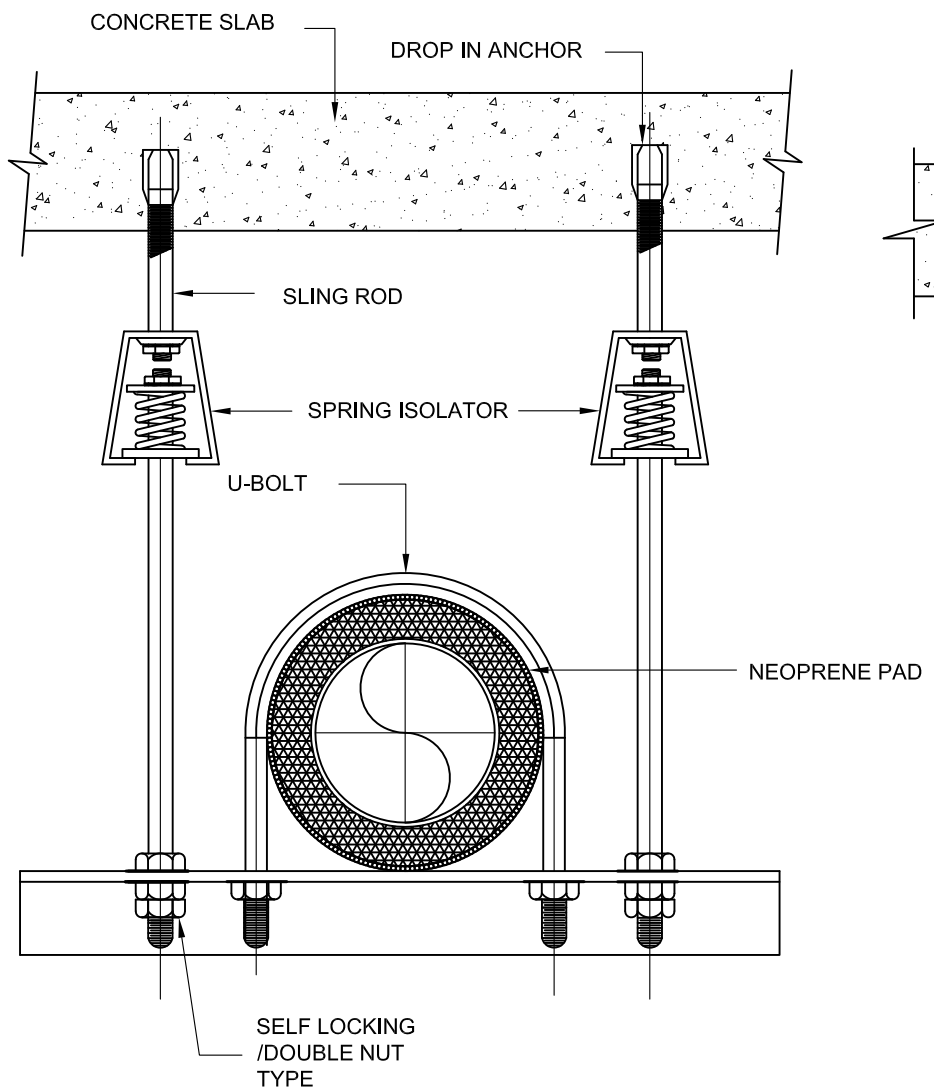

TYPICAL PIPE HANGER (SINGLE PIPE)

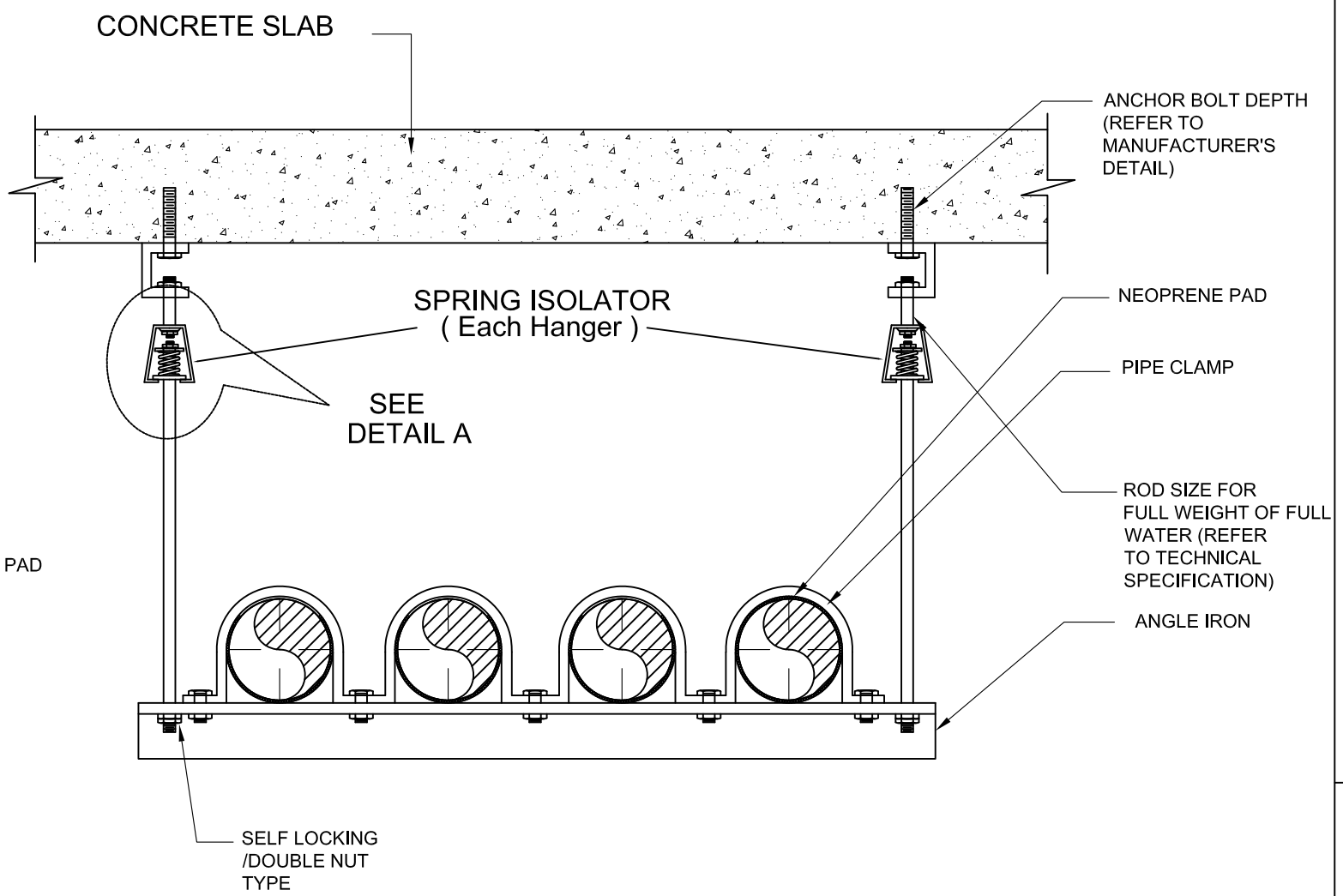

TYPICAL PIPE HANGER (MORE THAN ONE PIPE)

PIPE HANGERS FOR INSULATED PIPE INSIDE MECHANICAL ROOM

NOTE:

JKR MEKANIKAL

JASA KEPADA RAKYAT

CAWANGAN KEJURUTERAAN MEKANIKAL
Ibu Pejabat JKR Malaysia

AIR CONDITIONING SYSTEM

PIPE HANGERS FOR INSULATED PIPE (INSIDE MECHANICAL ROOM)

DATE	SCALE
2017	N.T.S

DRAWING NUMBER

CKM/STD/AC/PIPE/REV2017/02

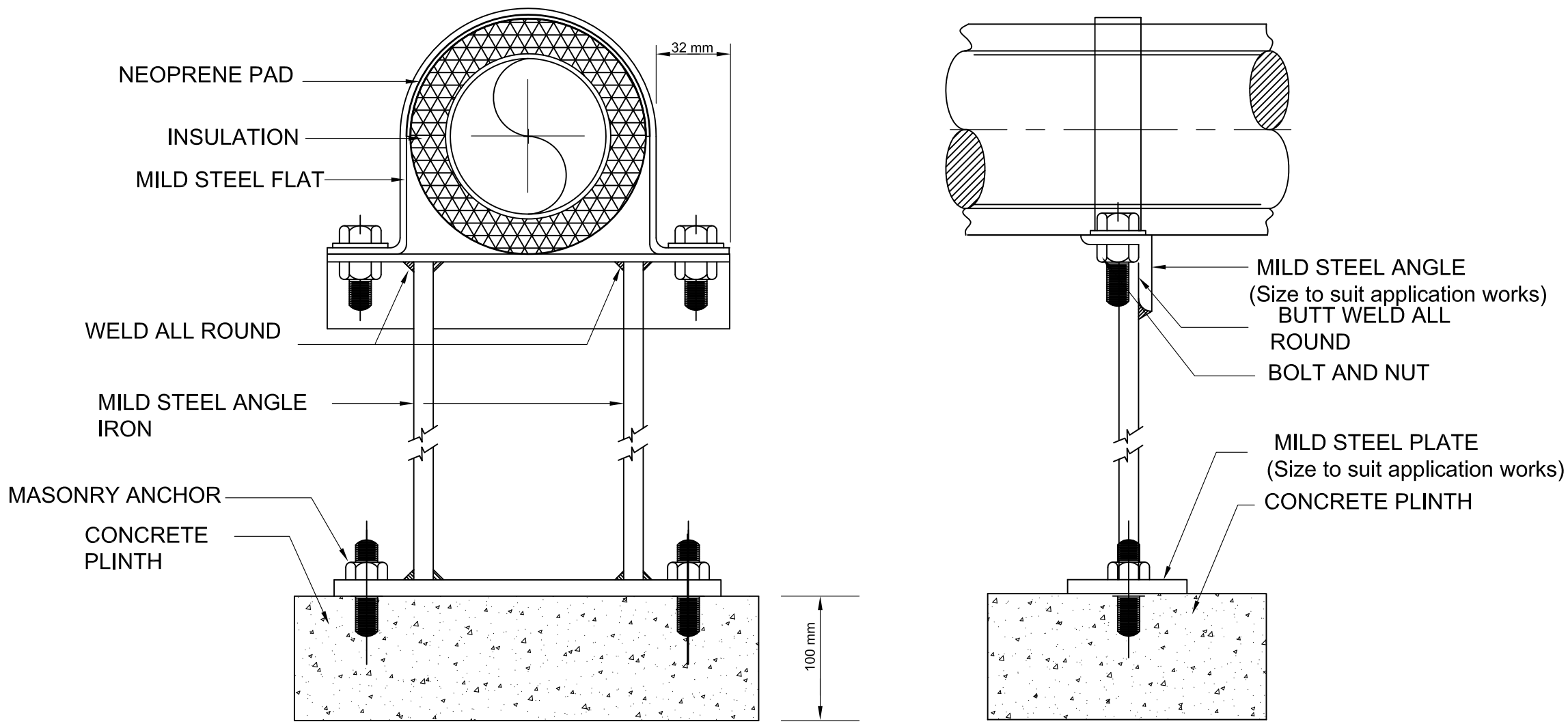

FLOOR MOUNTED PIPE SUPPORT (OUTSIDE MECHANICAL ROOM)

NOTE:

JKR MEKANIKAL

JASA KEPADA RAKYAT

CAWANGAN KEJURUTERAAN MEKANIKAL
Ibu Pejabat JKR Malaysia

AIR CONDITIONING SYSTEM

FLOOR MOUNTED PIPE SUPPORT (OUTSIDE MECHANICAL ROOM)

DATE	SCALE
2017	N.T.S

DRAWING NUMBER

CKM/STD/AC/PIPE/REV2017/03

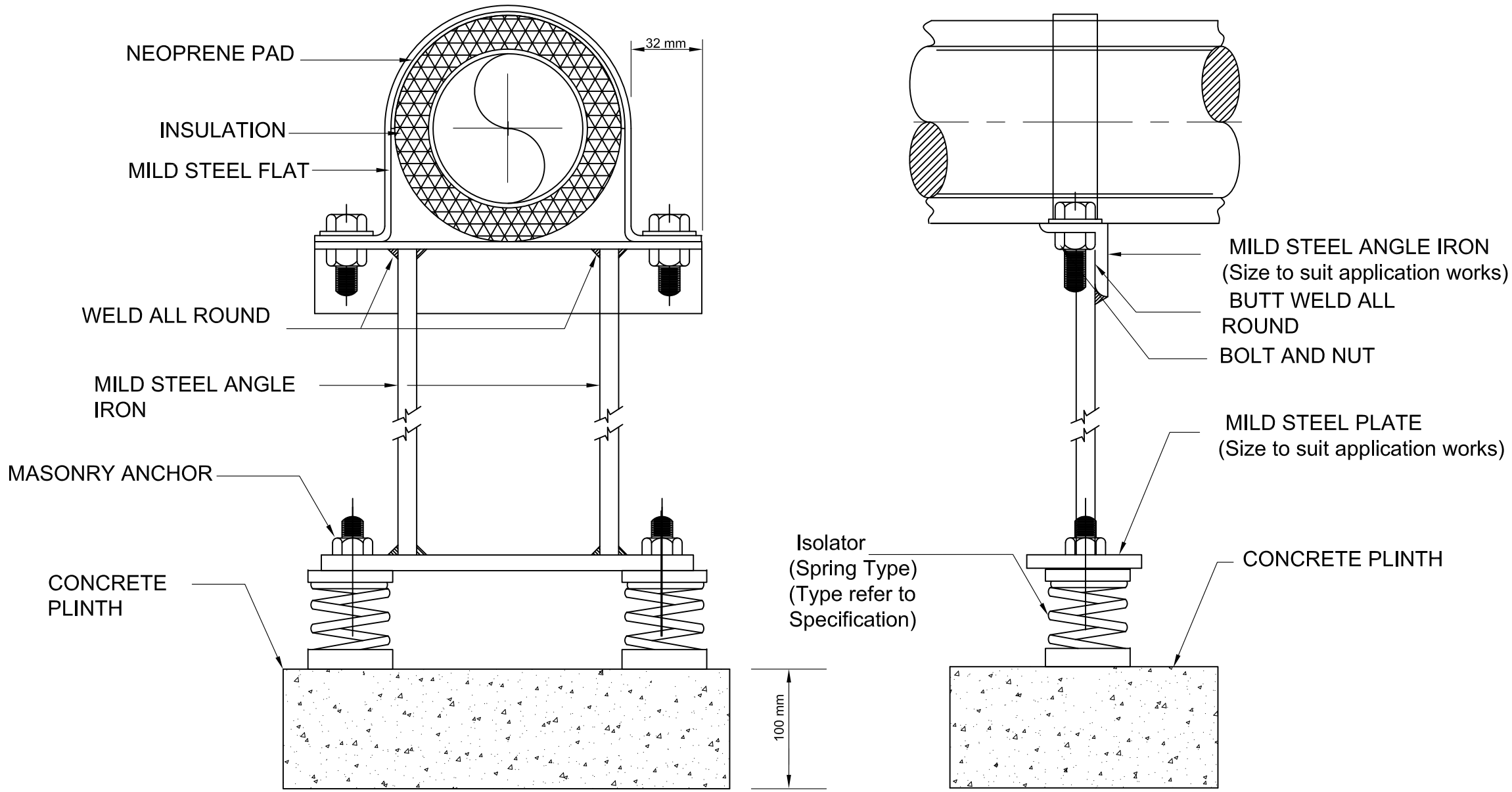

FLOOR MOUNTED PIPE SUPPORT
(INSIDE MECHANICAL ROOM)

NOTE:

JKR MEKANIKAL

JASA KEPADA RAKYAT

CAWANGAN KEJURUTERAAN MEKANIKAL
Ibu Pejabat JKR Malaysia

AIR CONDITIONING SYSTEM

FLOOR MOUNTED PIPE SUPPORT
(INSIDE MECHANICAL ROOM)

DATE	SCALE
2017	N.T.S

DRAWING NUMBER

CKM/STD/AC/PIPE/REV2017/04

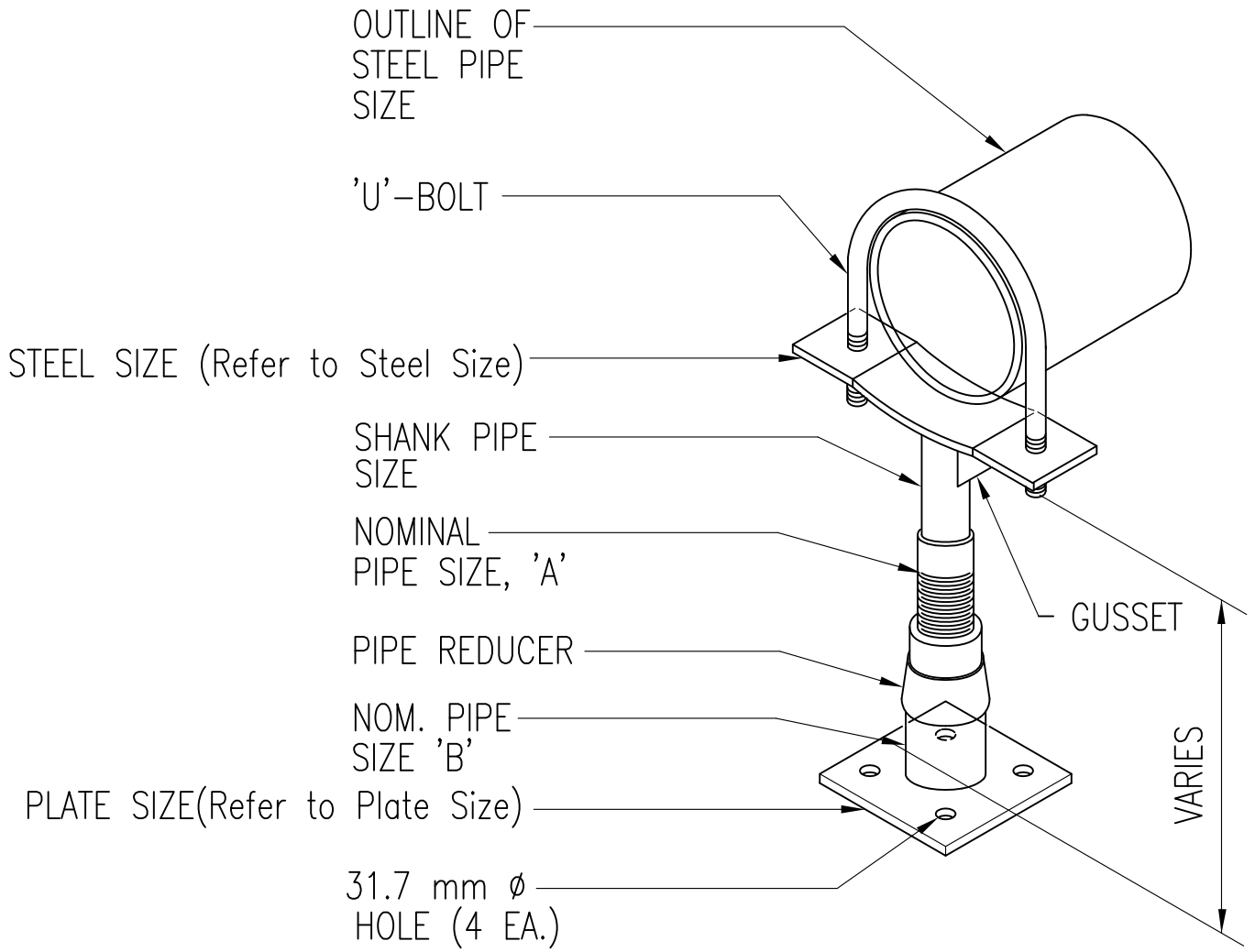

NOTE :

1. MATERIAL – STEEL PIPE / MALLEABLE IRON

PIPE SUPPORT SCHEDULE (mm)						
STL. PIPE SIZE	' A '	' B '	STEEL SIZE	' U ' BOLT	PLATE SIZE	SHANK PIPE SIZE
100 (4")	65	80	9.5x88.9	15	9.5x203 x 203.2	60.3
150 (6")	65	80	12.7x88.9	16	– DO –	60.3
200 (8")	65	80	12.7x88.9	16	– DO –	60.3
250 (10")	65	80	12.7x88.9	20	– DO –	60.3
300 (12")	65	80	12.7x88.9	22	– DO –	60.3

PIPE SADDLE WITH 'U'-BOLT

NOTE:

JKR MEKANIKAL

JASA KEPADA RAKYAT

CAWANGAN KEJURUTERAAN MEKANIKAL
Ibu Pejabat JKR Malaysia

AIR CONDITIONING SYSTEM

PIPE SADDLE WITH 'U' - BOLT

DATE	SCALE
2017	N.T.S

DRAWING NUMBER

CKM/STD/AC/PIPE/REV2017/05

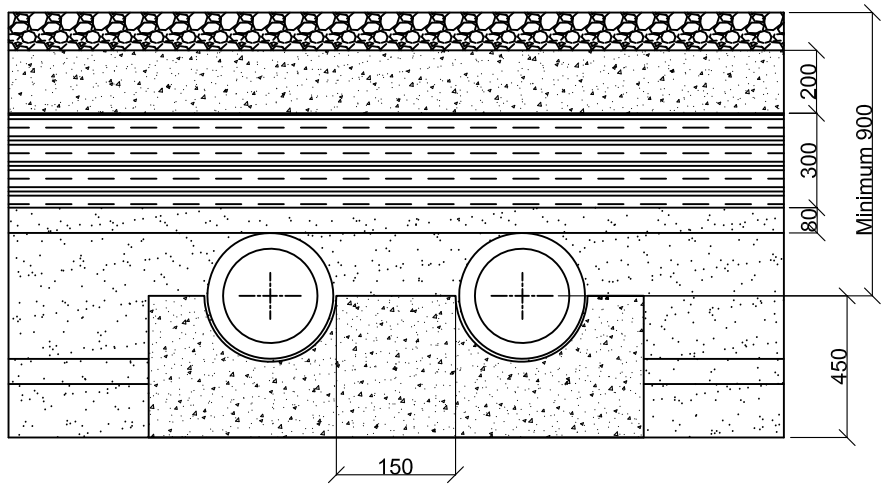

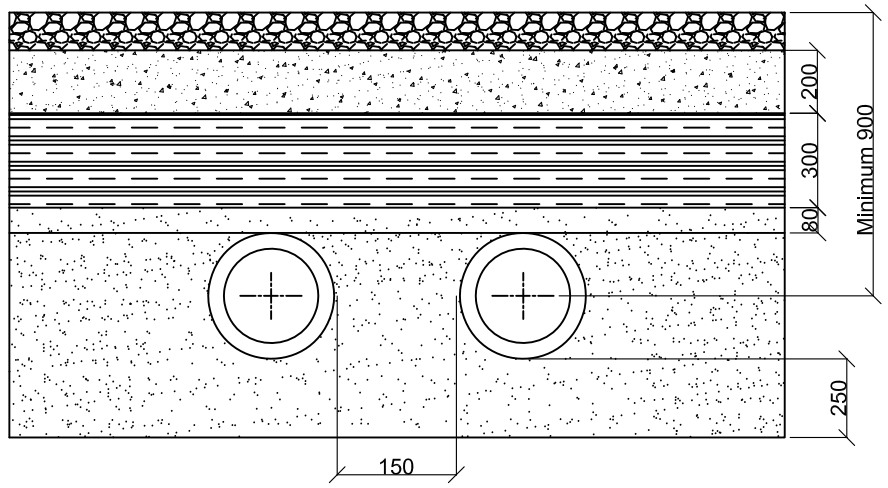

CROSS SECTION OF UNDERGROUND PIPES

PIPES BURIED UNDER THE ROAD

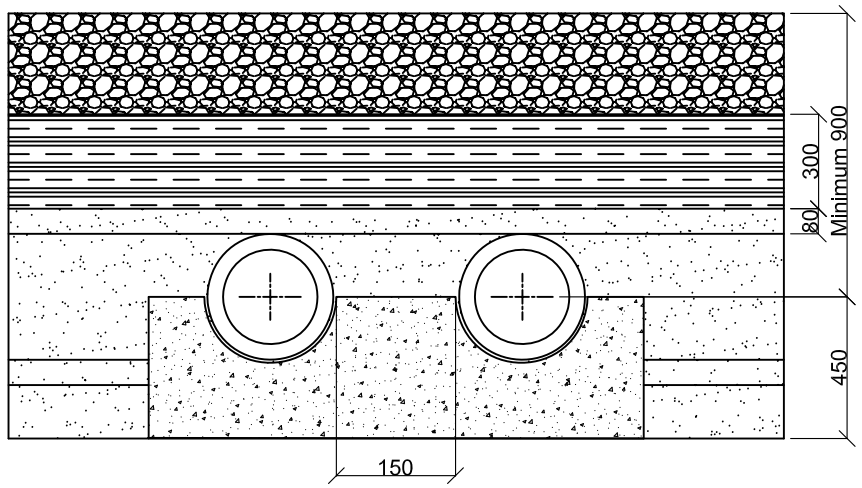

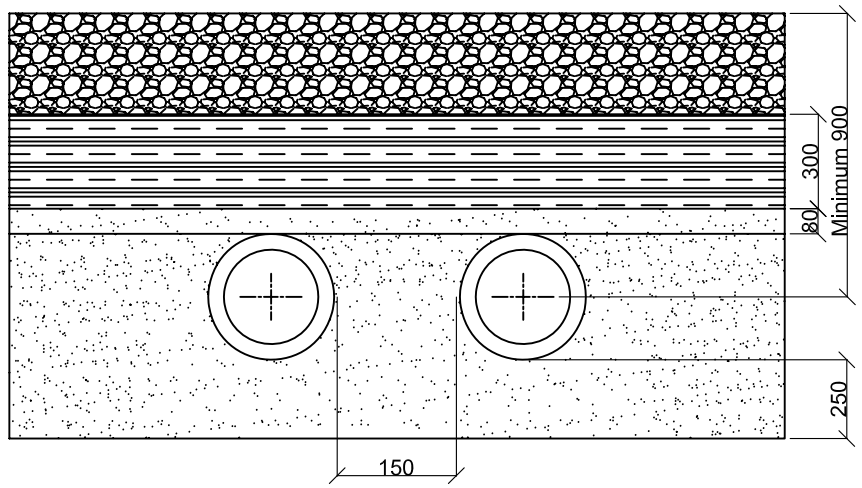

CROSS SECTION OF UNDERGROUND PIPES

PIPES BURIED UNDERGROUND (OTHER THAN UNDER THE ROAD)

LEGEND

- AVAILABLE MATERIAL
- ROCK-FREE BRACKFILL
- SAND BACKFILL
- CONCRETE

NOTE:

JKR MEKANIKAL

JASA KEPADA RAKYAT

CAWANGAN KEJURUTERAAN MEKANIKAL
Ibu Pejabat JKR Malaysia

AIR CONDITIONING SYSTEM

CROSS SECTION OF UNDERGROUND PIPES

DATE	SCALE
2017	N.T.S

DRAWING NUMBER

CKM/STD/AC/PIPE/REV2017/06

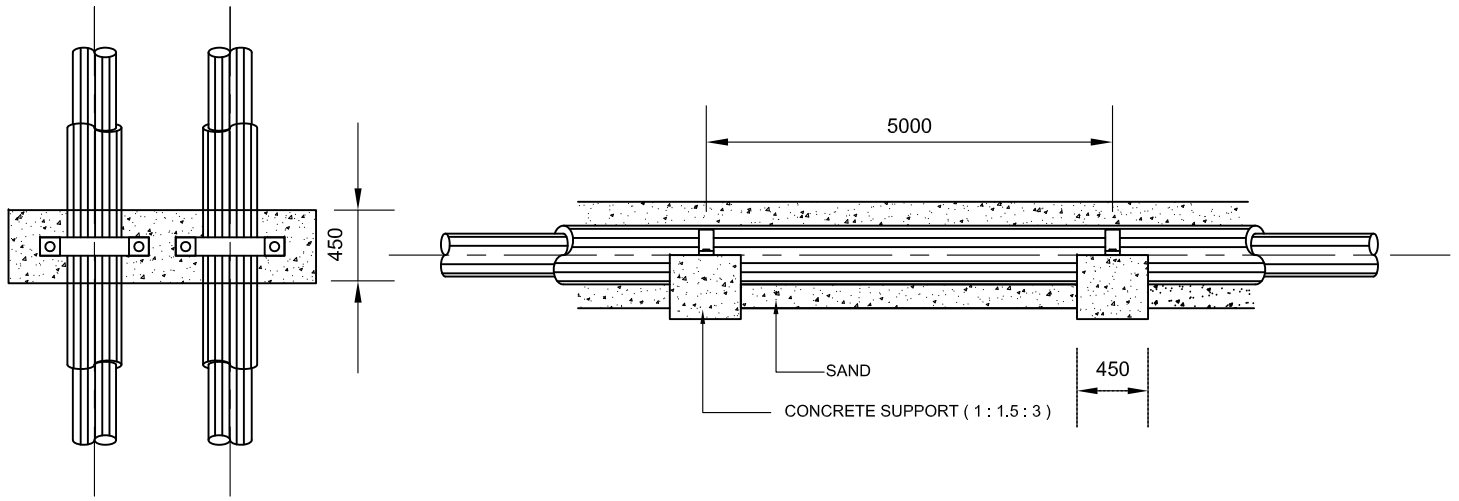

PLAN

SIDE VIEW

DETAIL OF UNDERGROUND PIPE BRACKET

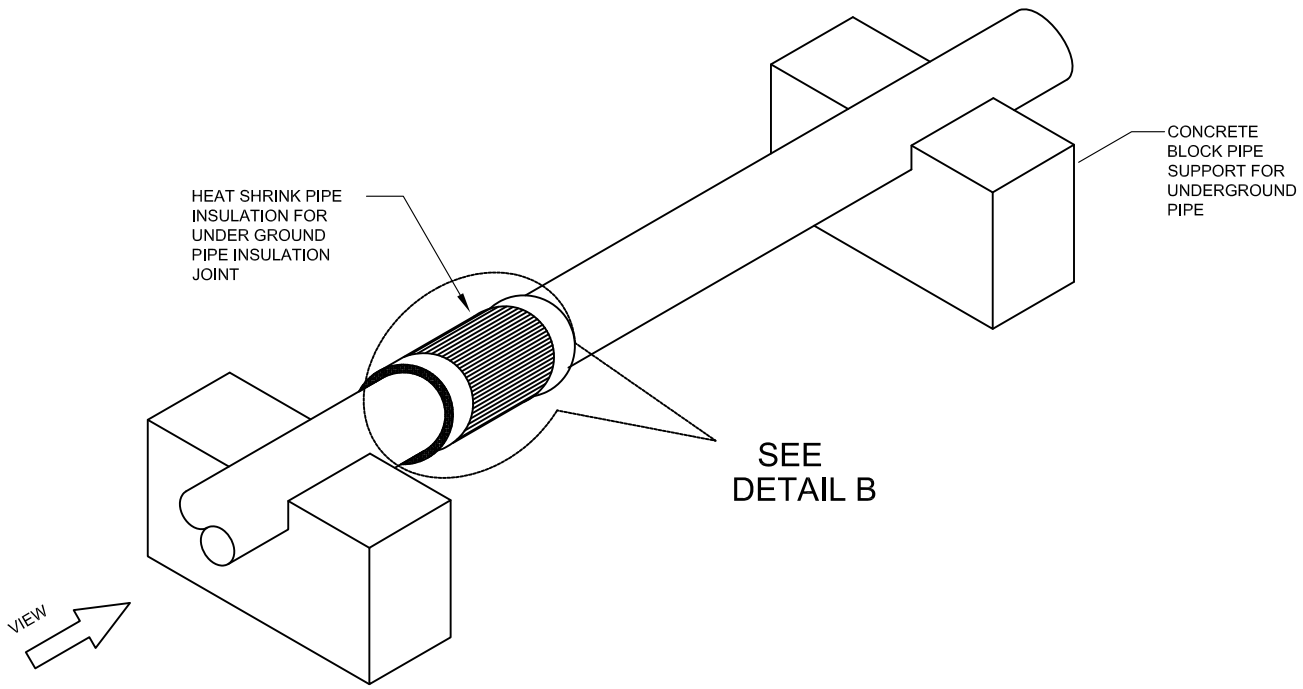

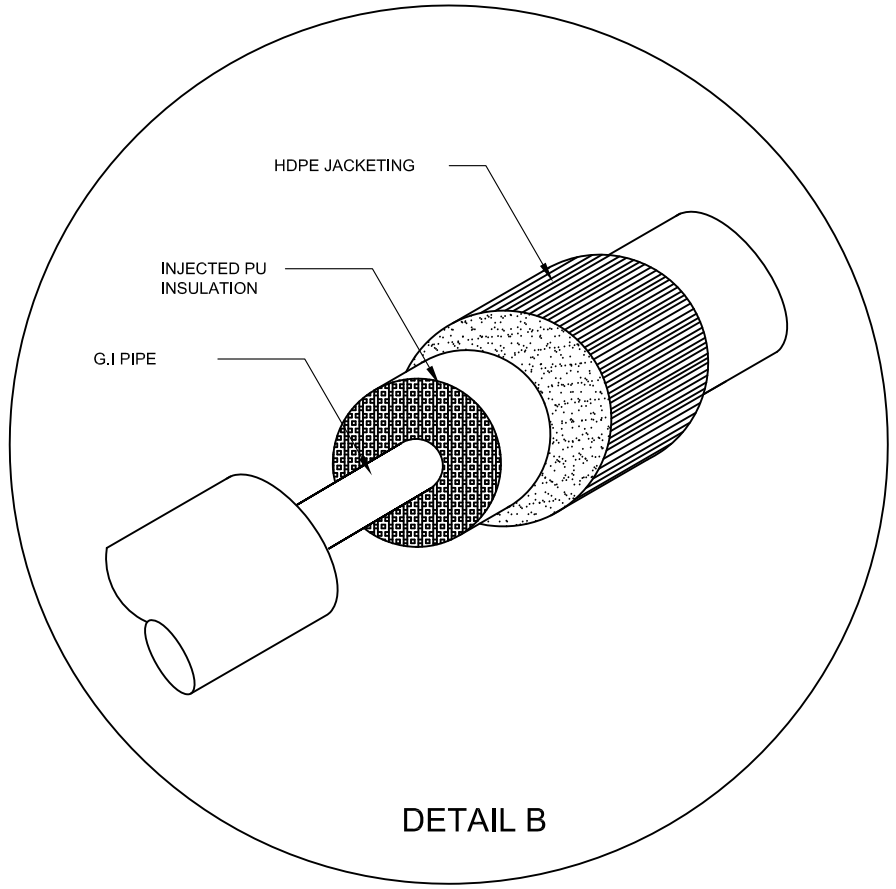

UNDERGROUND PIPE INSULATION JOINT AND SUPPORT

(FOR CHILLED WATER AND CONDENSER WATER PIPES)

NOTE:

JASA KEPADA RAKYAT

CAWANGAN KEJURUTERAAN MEKANIKAL
Ibu Pejabat JKR Malaysia

AIR CONDITIONING SYSTEM

UNDERGROUND PIPE INSULATION JOINT AND SUPPORT

DATE	SCALE
2017	N.T.S

DRAWING NUMBER

CKM/STD/AC/PIPE/REV2017/07

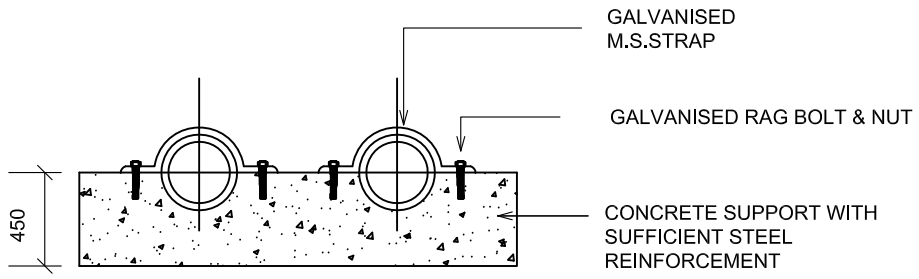

END VIEW

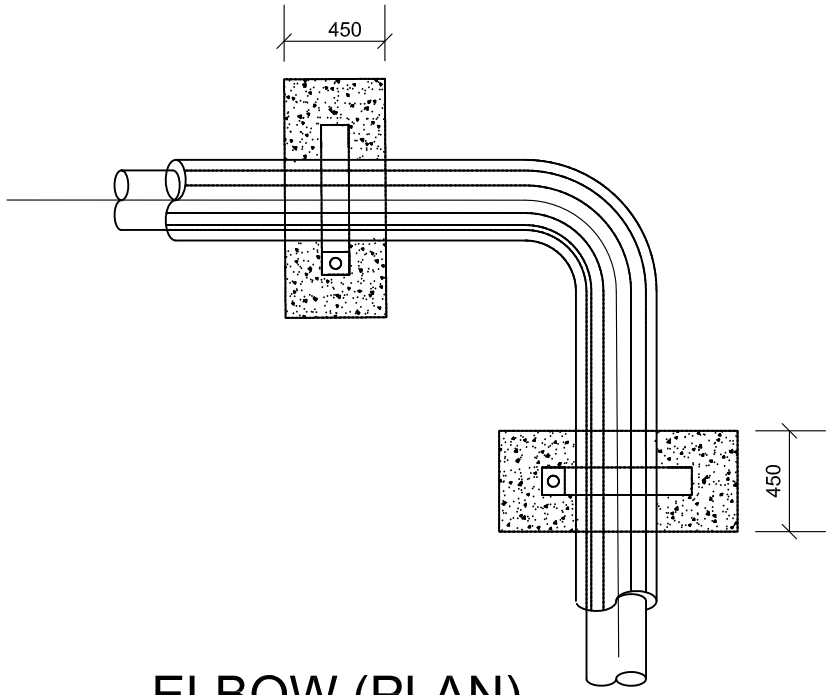

ELBOW (PLAN)

DETAIL DRAWING PRE-INSULATED PIPE BURIED UNDERGROUND

NOTE:

JKR
MEKANIKAL

JASA KEPADA RAKYAT

CAWANGAN KEJURUTERAAN MEKANIKAL
Ibu Pejabat JKR Malaysia

AIR CONDITIONING SYSTEM

DETAIL DRAWING PRE-INSULATION PIPE
BURIED UNDERGROUND

DATE	SCALE
2017	N.T.S

DRAWING NUMBER
CKM/STD/AC/PIPE/REV2017/08

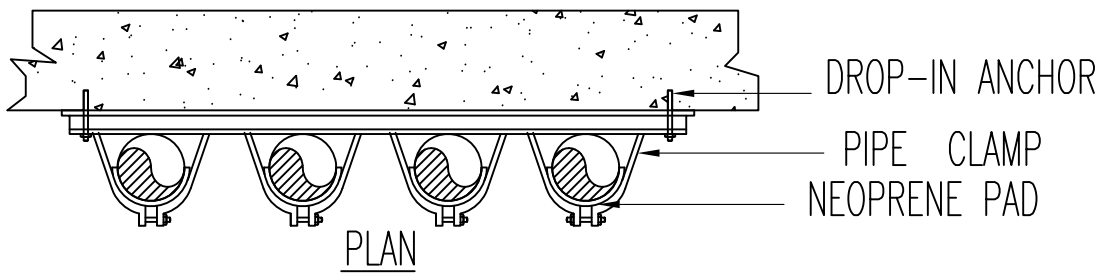

PLAN

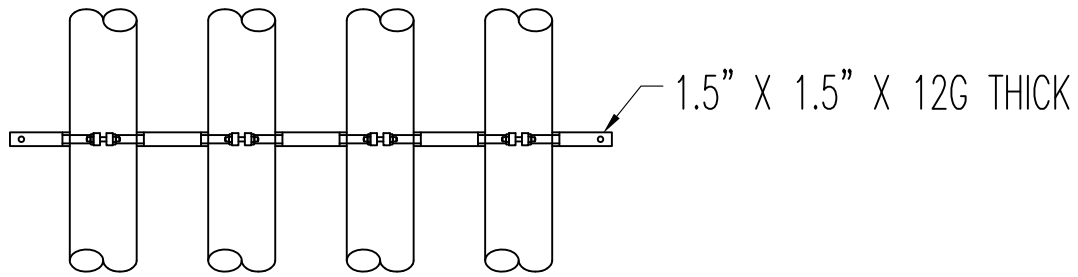

ELEVATION

RISER PIPES BRACKET FOR HORIZONTAL PIPES

PIPE SIZE (MM)	ANCHOR SIZE (MM)
20	10
25	10
32	10
40	10
50	13
60	13
75	13
90	13
100	13
130	13
150	13

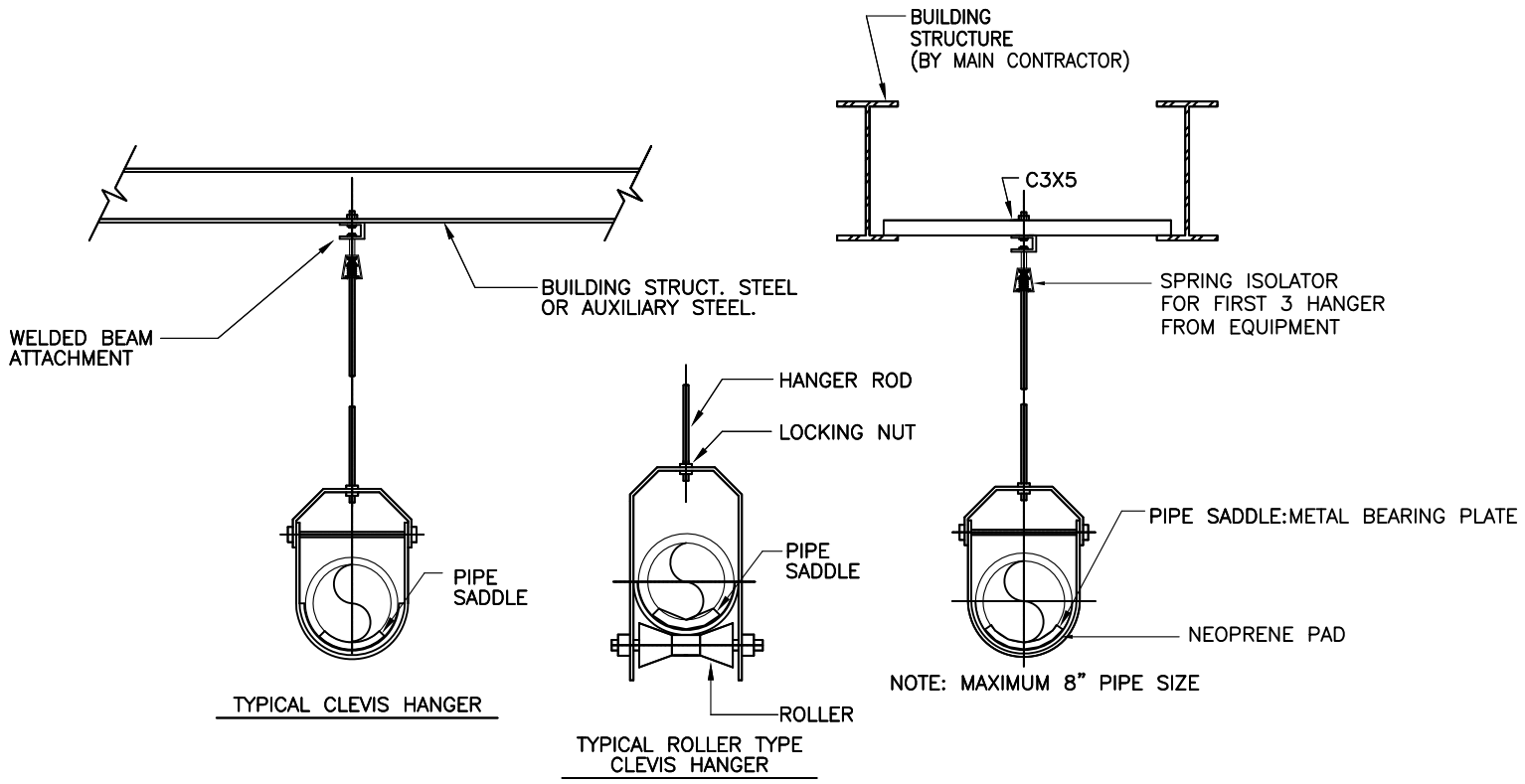

TYPICAL CLEVIS HANGER

TYPICAL ROLLER TYPE CLEVIS HANGER

DETAIL - PIPE HANGER TYPES

NOTE:

JKR MEKANIKAL

JASA KEPADA RAKYAT

CAWANGAN KEJURUTERAAN MEKANIKAL
Ibu Pejabat JKR Malaysia

AIR CONDITIONING SYSTEM

DETAIL OF PIPES HANGER, AND BRACKET

DATE	SCALE
2017	N.T.S

DRAWING NUMBER

CKM/STD/AC/PIPE/REV2017/09

AIR HANDLING UNIT

JKR
MEKANIKAL

JASA KEPADA RAKYAT

NOTES: STEEL BRACKET FOR HANGER SHALL BE FIXED TO THE CONCRETE/SLAB WITH SUITABLE SIZE OF ANCHOR BOLT RECOMMENDED BY THE MANUFACTURER

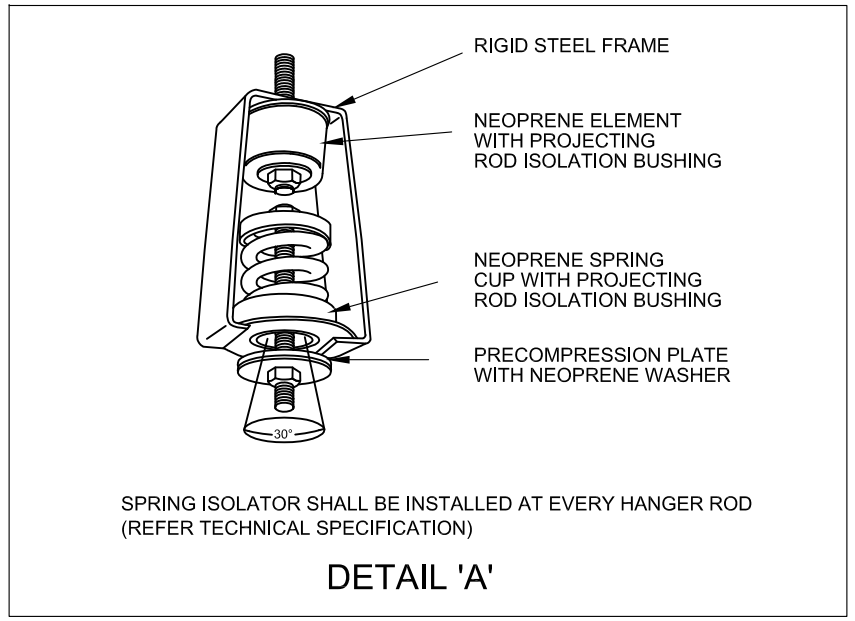

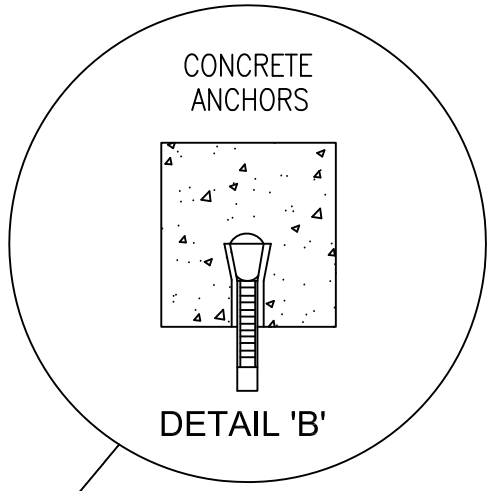

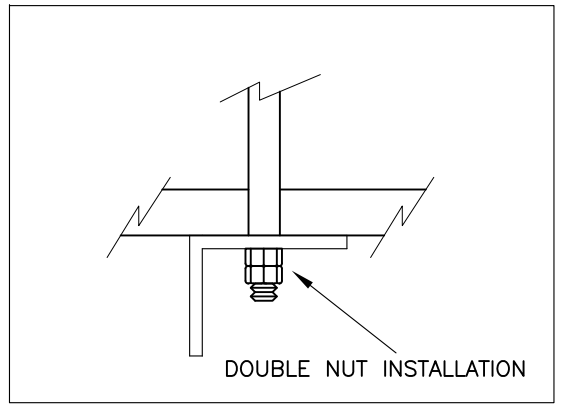

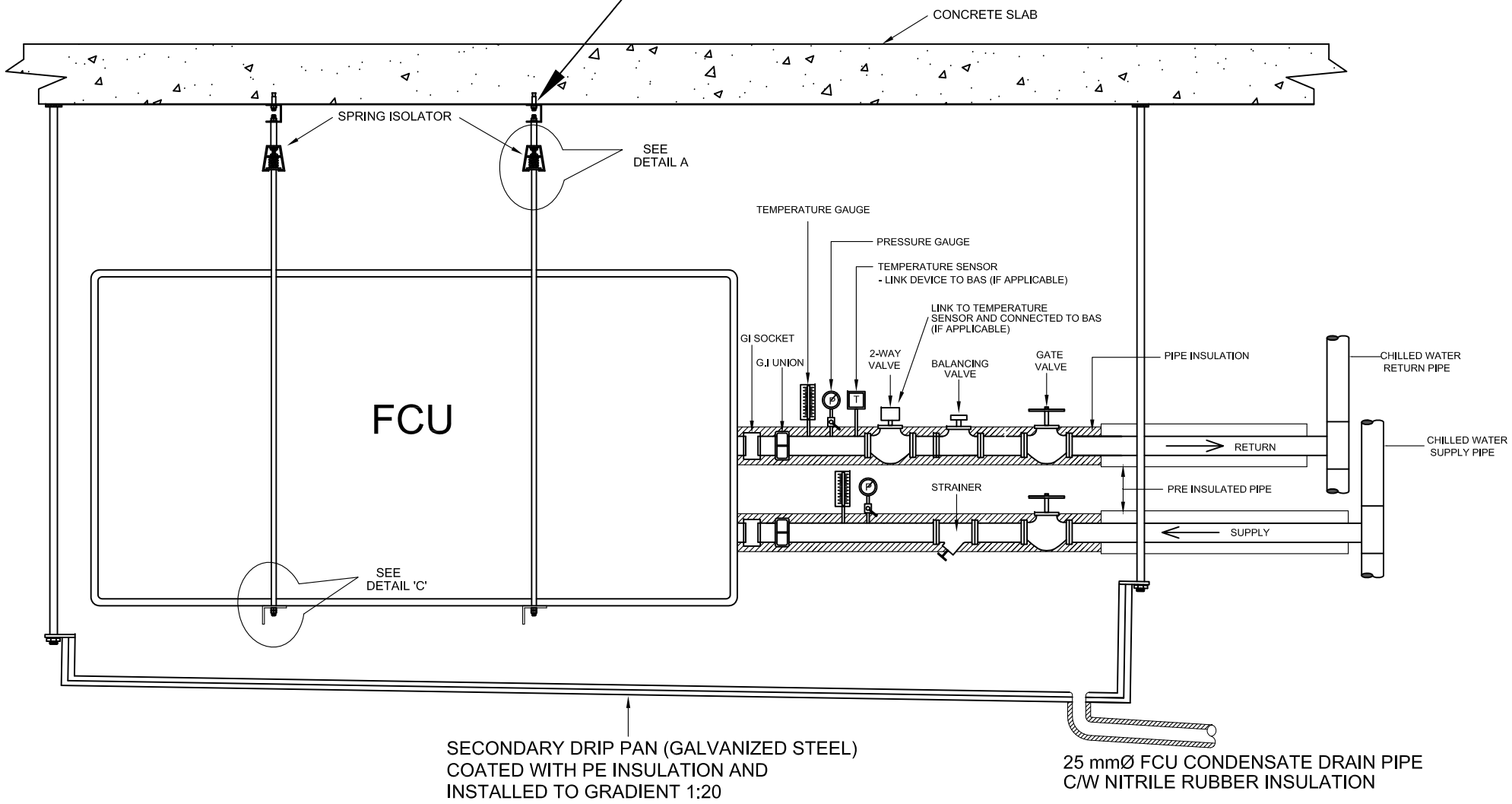

TYPICAL FAN COIL UNIT (FCU) PIPING CONNECTION USING 2-WAY VALVE

NOTE:

PETUNJUK

- HEAVY DUTY PRESSURE GAUGE
- HEAVY DUTY TEMPERATURE GAUGE
- TEMPERATURE SENSOR

JKR MEKANIKAL

JASA KEPADA RAKYAT

CAWANGAN KEJURUTERAAN MEKANIKAL
Ibu Pejabat JKR Malaysia

AIR CONDITIONING SYSTEM

TYPICAL FCU CONNECTION USING 2-WAY VALVE

DATE	SCALE
2017	N.T.S

DRAWING NUMBER

CKM/STD/AC/AHU/REV2017/01

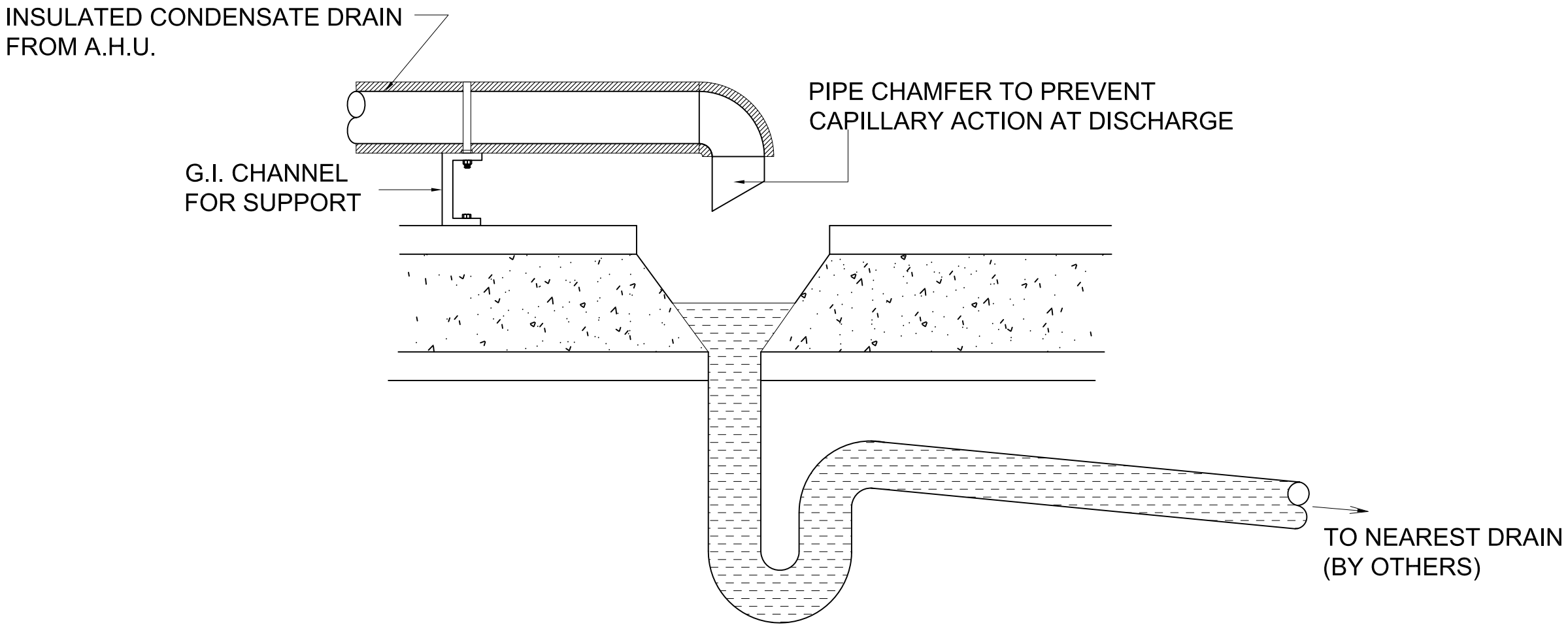

DETAILS OF CONDENSATE DRAIN

NOTE:

JKR MEKANIKAL

JASA KEPADA RAKYAT

CAWANGAN KEJURUTERAAN MEKANIKAL
Ibu Pejabat JKR Malaysia

AIR CONDITIONING SYSTEM

DETAILS OF CONDENSATE DRAIN

DATE	SCALE
2017	N.T.S

DRAWING NUMBER

CKM/STD/AC/AHU/REV2017/10

NOTES: STEEL BRACKET FOR HANGER SHALL BE FIXED TO THE CONCRETE/SLAB WITH SUITABLE SIZE OF ANCHOR BOLT RECOMMENDED BY THE MANUFACTURER

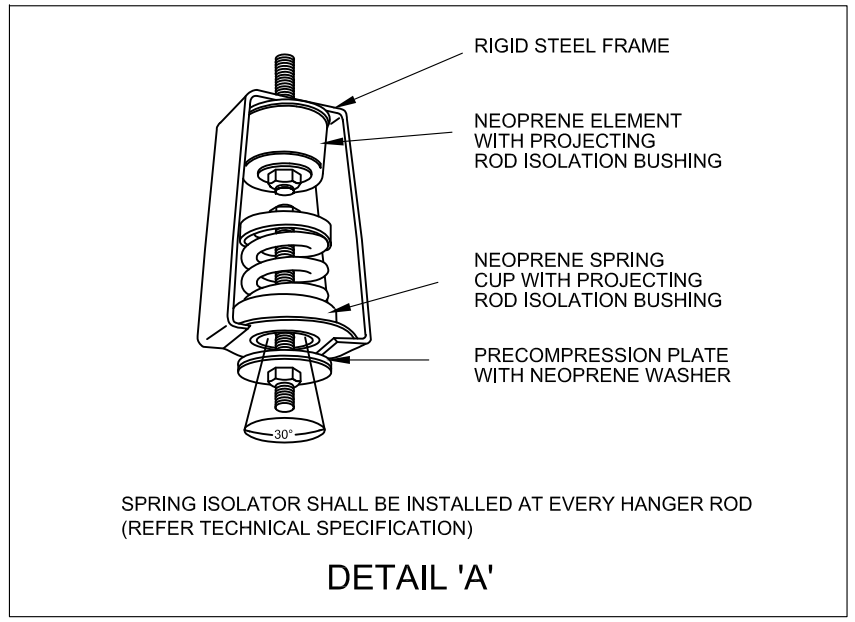

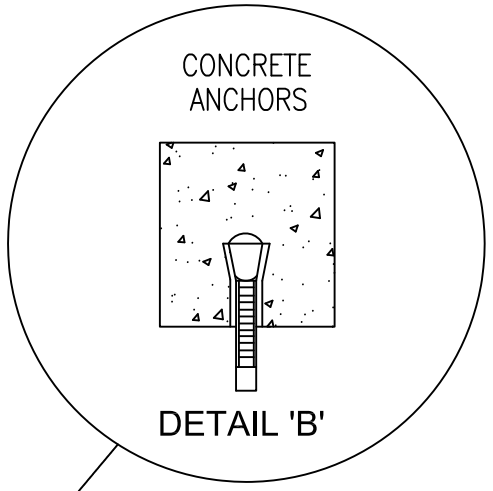

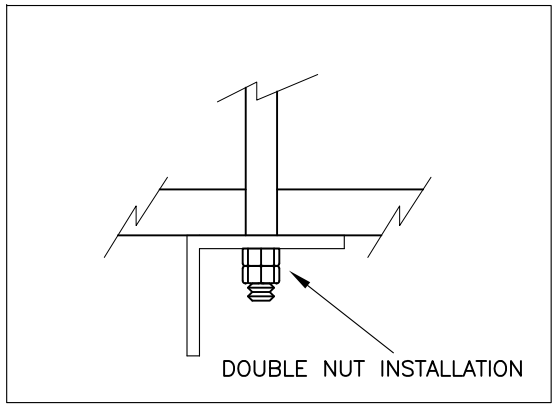

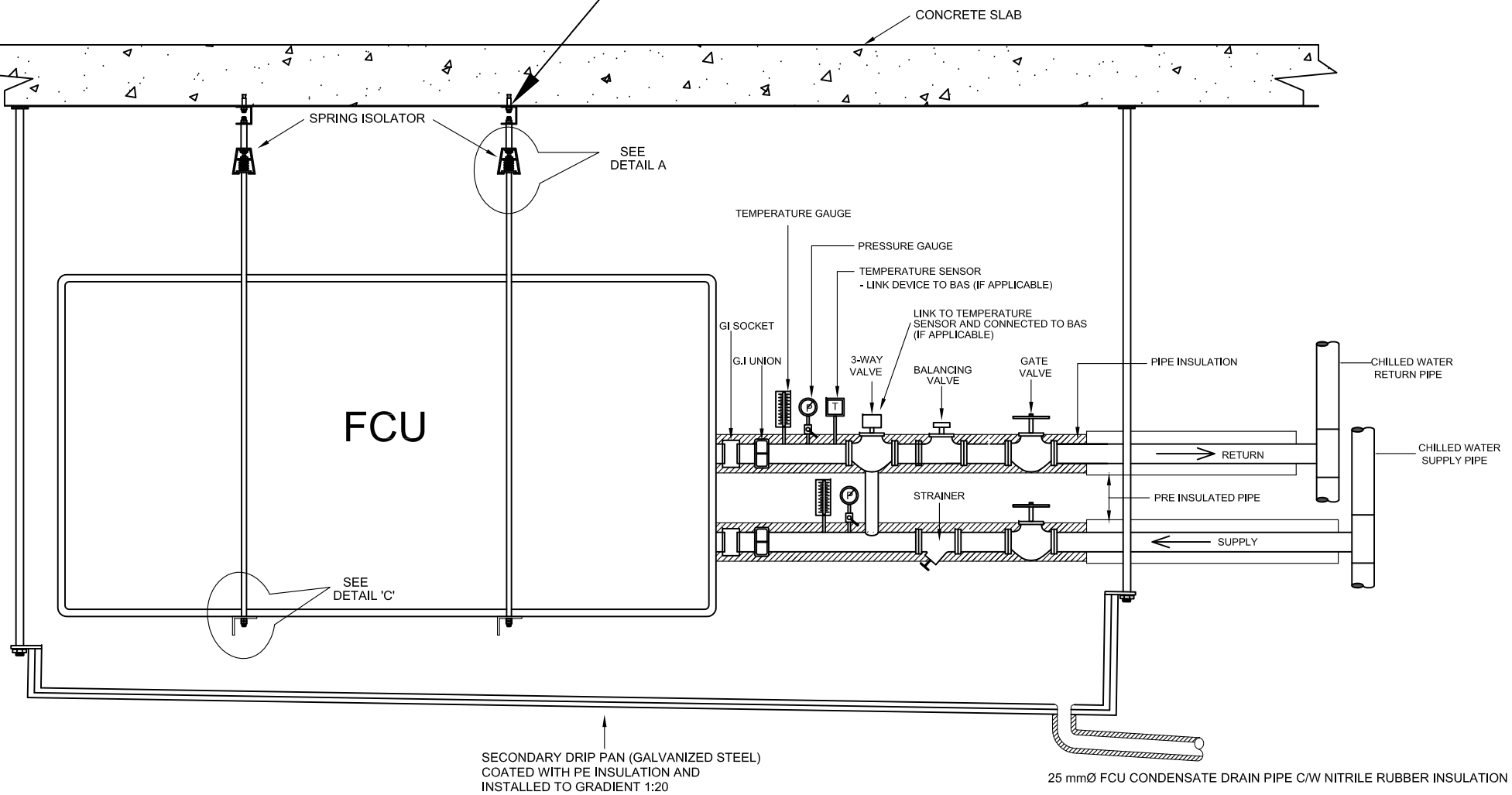

TYPICAL CONNECTION USING 3-WAY VALVE FOR FAN COIL UNIT(FCU) IN EVERY BRANCH

NOTE:

PETUNJUK

- HEAVY DUTY PRESSURE GAUGE
- HEAVY DUTY TEMPERATURE GAUGE
- TEMPERATURE SENSOR

JKR MEKANIKAL

JASA KEPADA RAKYAT

CAWANGAN KEJURUTERAAN MEKANIKAL
Ibu Pejabat JKR Malaysla

AIR CONDITIONING SYSTEM

TYPICAL FCU CONNECTION USING 3-WAY VALVE

DATE	SCALE
2017	N.T.S

DRAWING NUMBER

CKM/STD/AC/AHU/REV2017/02

NOTE:

COOLING COIL SHALL BE SIZED WITH THE FACE MAXIMUM VELOCITY OF 550 FPM.

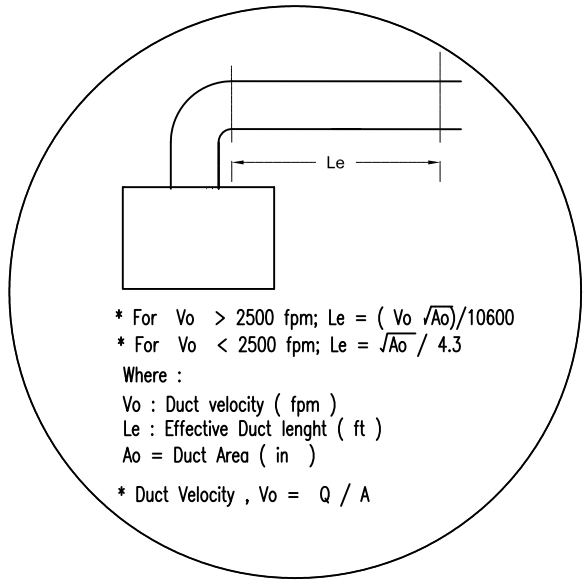

NOTE :
THE LENGTH OF INTERNAL INSULATION SHALL BE TAKEN AS 5 METER FROM THE FAN OUTLET OR 1 METER BEYOND THE FIRST BEND, WHICHEVER IS THE LONGEST

ALL AHU & FCU SHALL HAVE MINIMUM STRAIGHT DUCT LENGTH OF OF 2½ TIMES DUCT DIAMETER OR LONGEST SIDE FOR RECTANGULAR DUCT AFTER THE FAN OUTLET BEFORE ANY BEND.

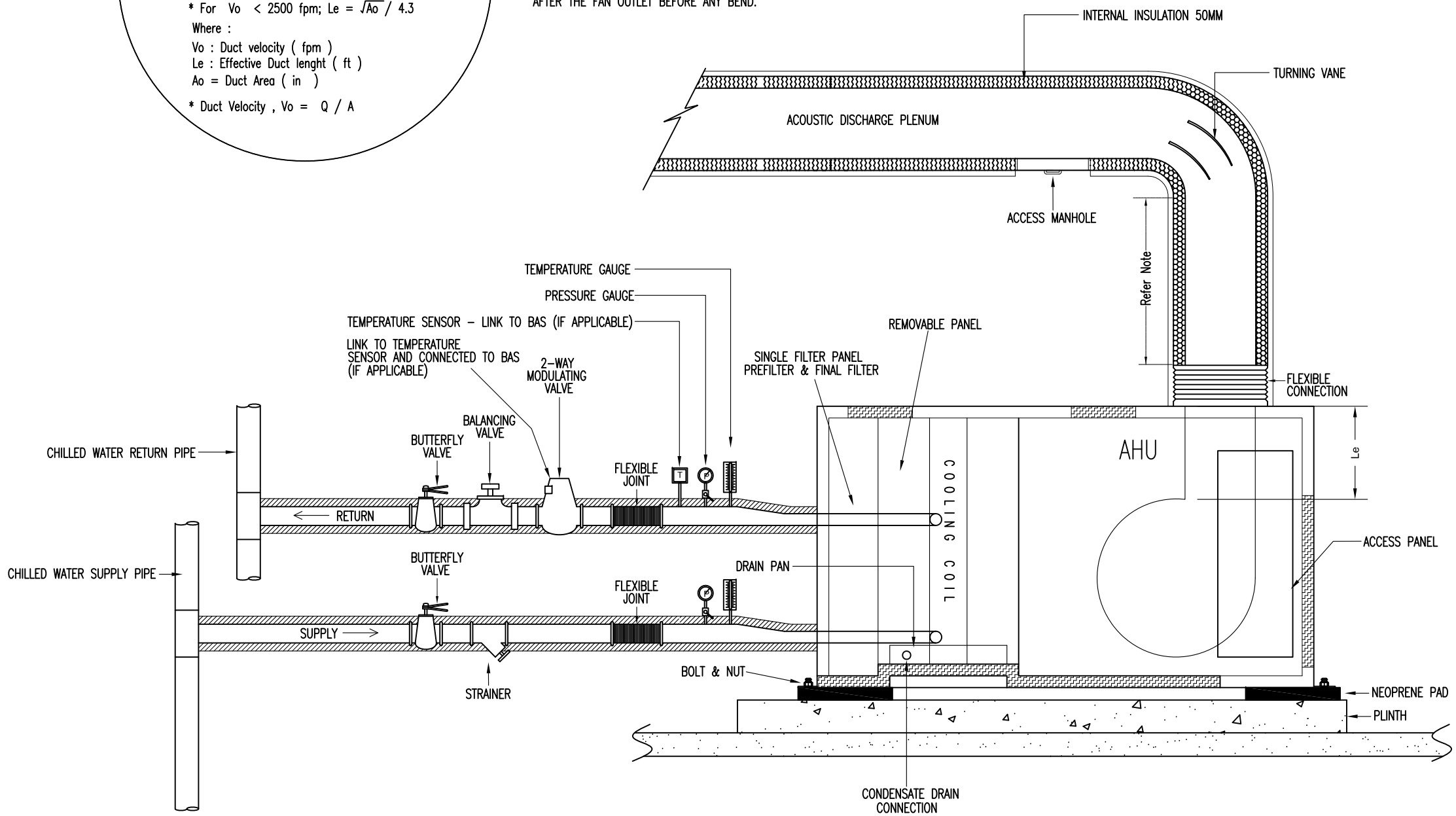

TYPICAL AHU PIPING CONNECTION USING 2-WAY VALVE

NOTE:

PETUNJUK

HEAVY DUTY PRESSURE GAUGE

HEAVY DUTY TEMPERATURE GAUGE

TEMPERATURE SENSOR

JKR MEKANIKAL

JASA KEPADA RAKYAT

CAWANGAN KEJURUTERAAN MEKANIKAL
Ibu Pejabat JKR Malaysia

AIR CONDITIONING SYSTEM

TYPICAL AHU CONNECTION USING 2 WAY VALVE

DATE	SCALE
2017	N.T.S

DRAWING NUMBER

CKM/STD/AC/AHU/REV2017/03

NOTE:

COOLING COIL SHALL BE SIZED WITH THE FACE MAXIMUM VELOCITY OF 550 FPM.

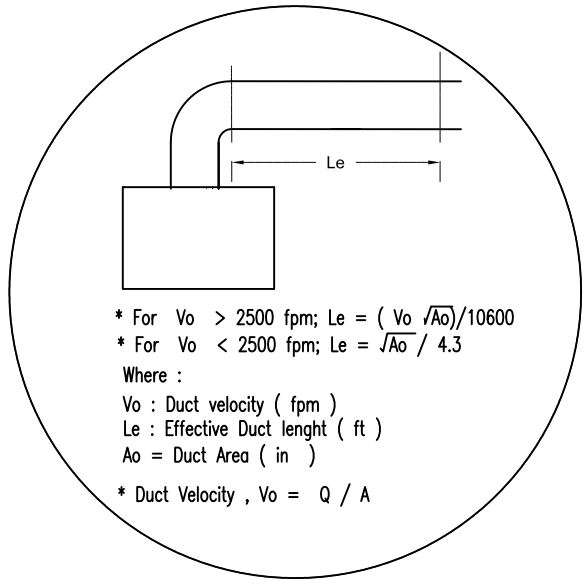

NOTE :
THE LENGTH OF INTERNAL INSULATION SHALL BE TAKEN AS 5 METER FROM THE FAN OUTLET OR 1 METER BEYOND THE FIRST BEND, WHICHEVER IS THE LONGEST

ALL AHU & FCU SHALL HAVE MINIMUM STRAIGHT DUCT LENGTH OF OF 2½ TIMES DUCT DIAMETER OR LONGEST SIDE FOR RECTANGULAR DUCT AFTER THE FAN OUTLET BEFORE ANY BEND.

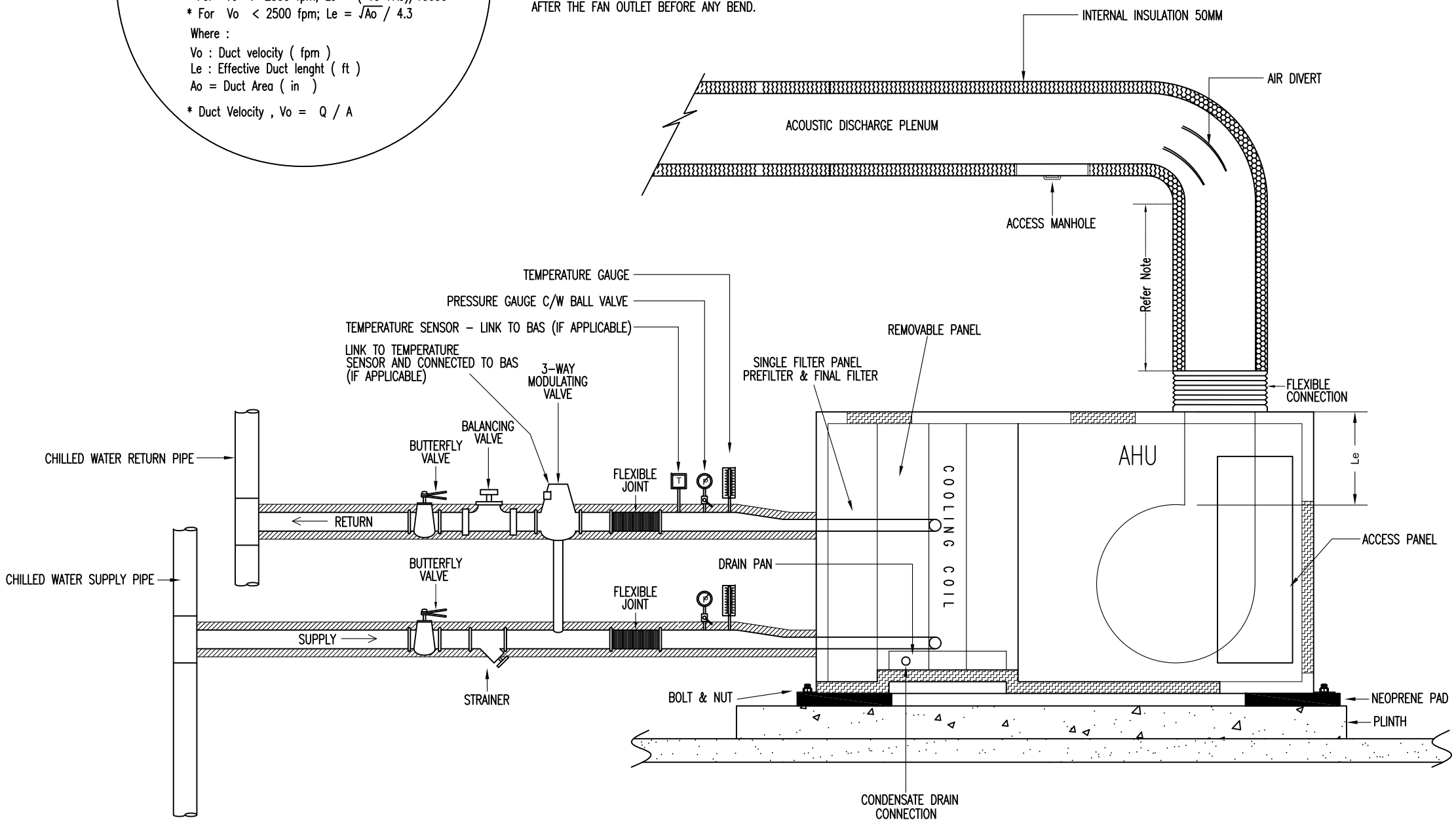

TYPICAL AHU PIPING CONNECTION USING 3-WAY VALVE

NOTE:

PETUNJUK

HEAVY DUTY PRESSURE GAUGE

HEAVY DUTY TEMPERATURE GAUGE

TEMPERATURE SENSOR

JKR MEKANIKAL

JASA KEPADA RAKYAT

CAWANGAN KEJURUTERAAN MEKANIKAL
Ibu Pejabat JKR Malaysia

AIR CONDITIONING SYSTEM

TYPICAL AHU CONNECTION USING 3 WAY VALVE

DATE	SCALE
2017	N.T.S

DRAWING NUMBER

CKM/STD/AC/AHU/REV2017/04

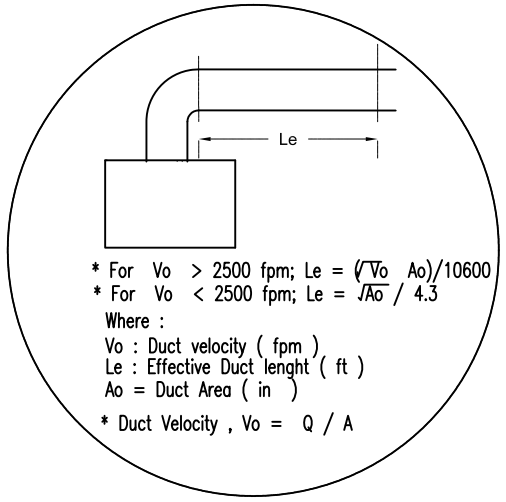

NOTE

THE LENGTH OF INTERNAL INSULATION SHALL BE TAKEN AS 5 METER FROM THE FAN OUTLET OR 1 METER BEYOND THE FIRST BEND, WHICHEVER IS THE LONGEST

ALL AHU & FCU SHALL HAVE MINIMUM STRAIGHT DUCT LENGTH OF OF 2½ TIMES DUCT DIAMETER OR LONGEST SIDE FOR RECTANGULAR DUCT AFTER THE FAN OUTLET BEFORE ANY BEND.

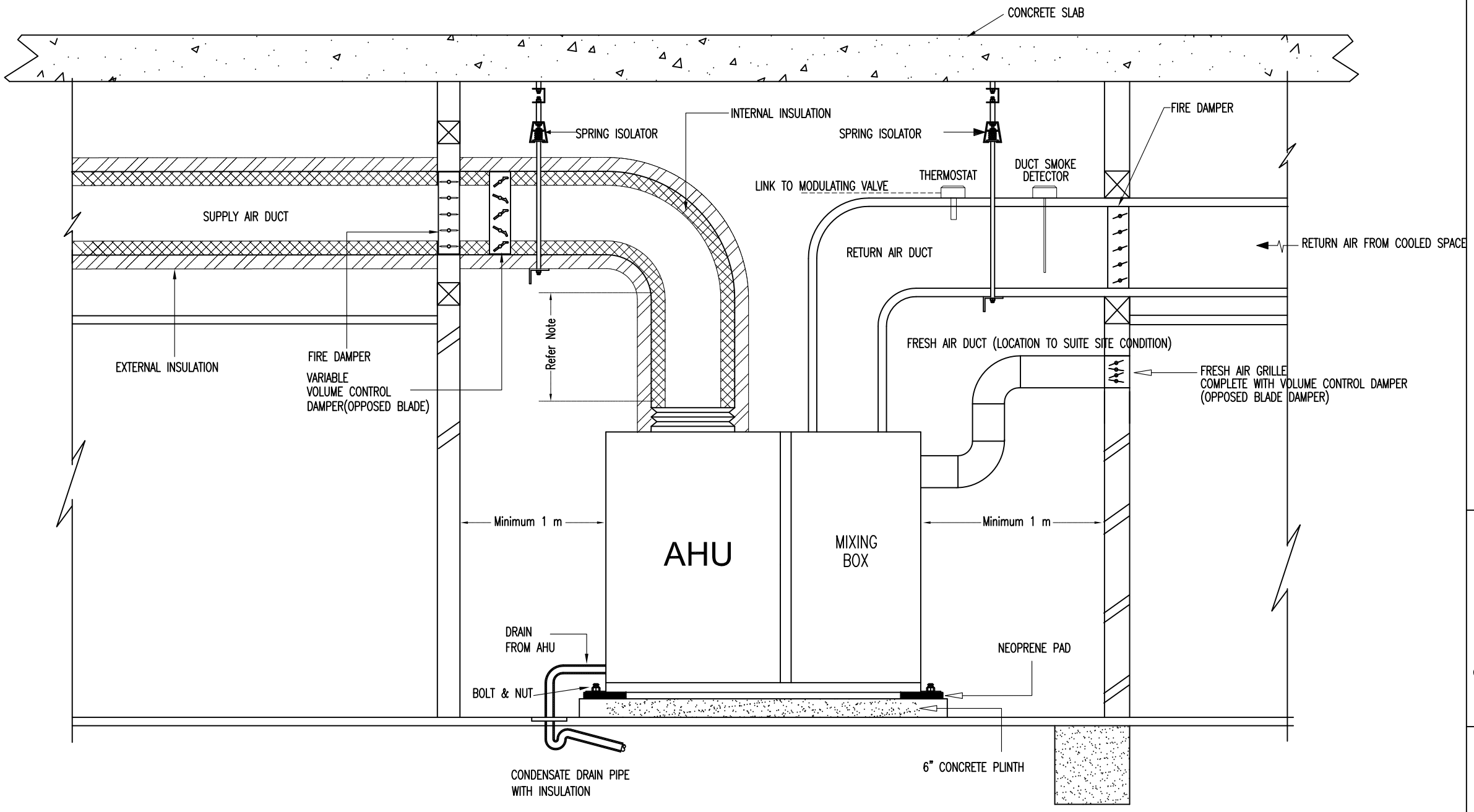

TYPICAL AHU INSTALLATION WITH MIXING BOX

NOTE:

THE LENGTH OF INTERNAL INSULATION SHALL BE

JKR MEKANIKAL

JASA KEPADA RAKYAT

CAWANGAN KEJURUTERAAN MEKANIKAL
Ibu Pejabat JKR Malaysia

AIR CONDITIONING SYSTEM

TYPICAL AHU INSTALLATION WITH MIXING BOX

DATE	SCALE
2017	N.T.S

DRAWING NUMBER

CKM/STD/AC/AHU/REV2017/05

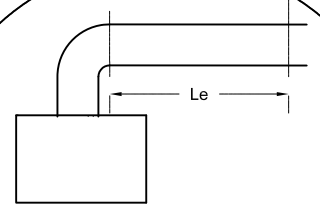

* For Vo > 2500 fpm; Le = (√Vo Ao)/10600
* For Vo < 2500 fpm; Le = √Ao / 4.3

Where :
Vo : Duct velocity (fpm)
Le : Effective Duct lenght (ft)
Ao = Duct Area (in)

* Duct Velocity , Vo = Q / A

NOTE

THE LENGTH OF INTERNAL INSULATION SHALL BE TAKEN AS 5 METER FROM THE FAN OUTLET OR 1 METER BEYOND THE FIRST BEND, WHICHEVER IS THE LONGEST

ALL AHU & FCU SHALL HAVE MINIMUM STRAIGHT DUCT LENGTH OF OF 2½ TIMES DUCT DIAMETER OR LONGEST SIDE FOR RECTANGULAR DUCT AFTER THE FAN OUTLET BEFORE ANY BEND.

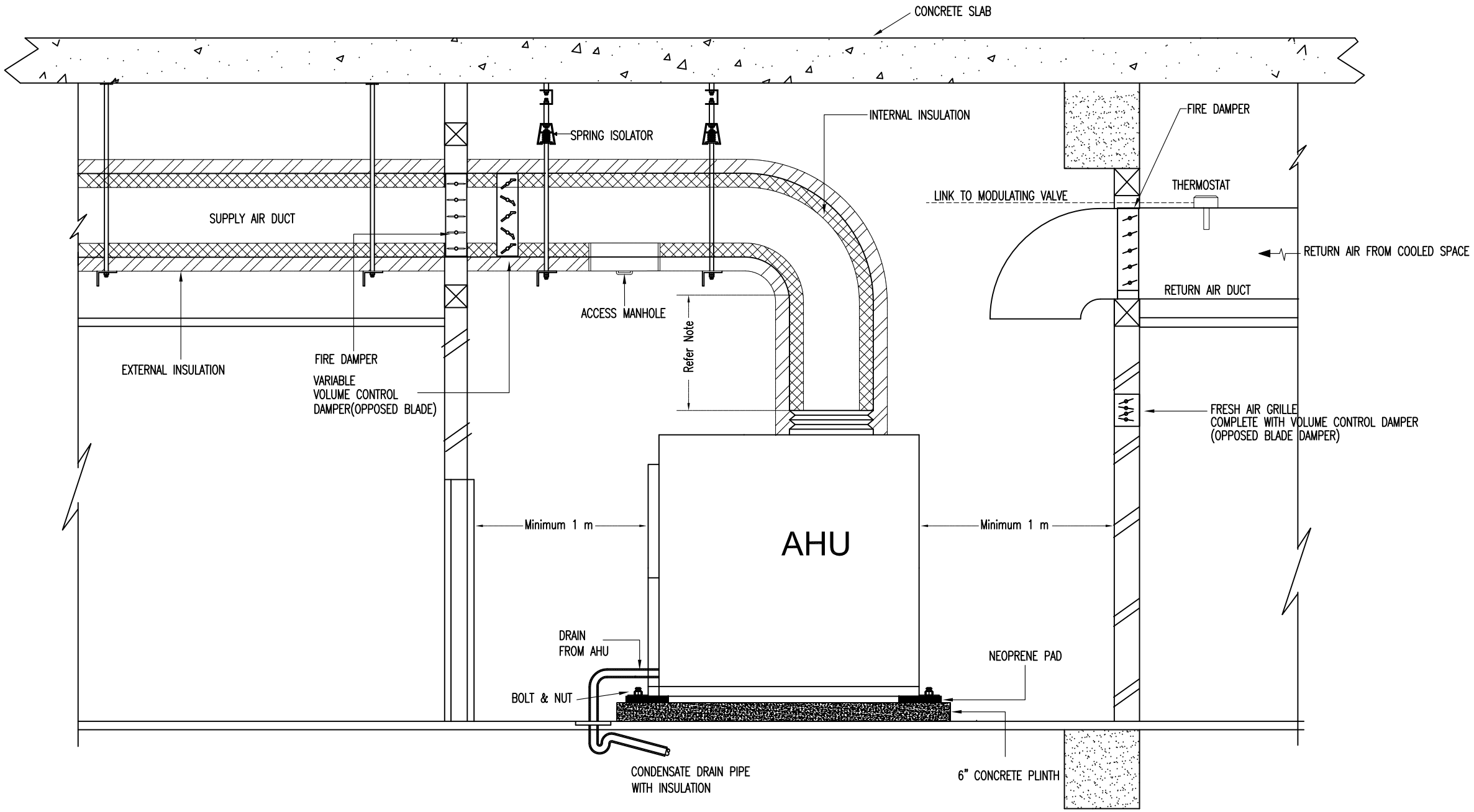

TYPICAL AHU INSTALLATION WITHOUT MIXING BOX

NOTE:

JKR MEKANIKAL

JASA KEPADA RAKYAT

CAWANGAN KEJURUTERAAN MEKANIKAL
Ibu Pejabat JKR Malaysia

AIR CONDITIONING SYSTEM

TYPICAL AHU INSTALLATION WITHOUT MIXING BOX

DATE	SCALE
2017	N.T.S

DRAWING NUMBER
CKM/STD/AC/AHU/REV2017/06

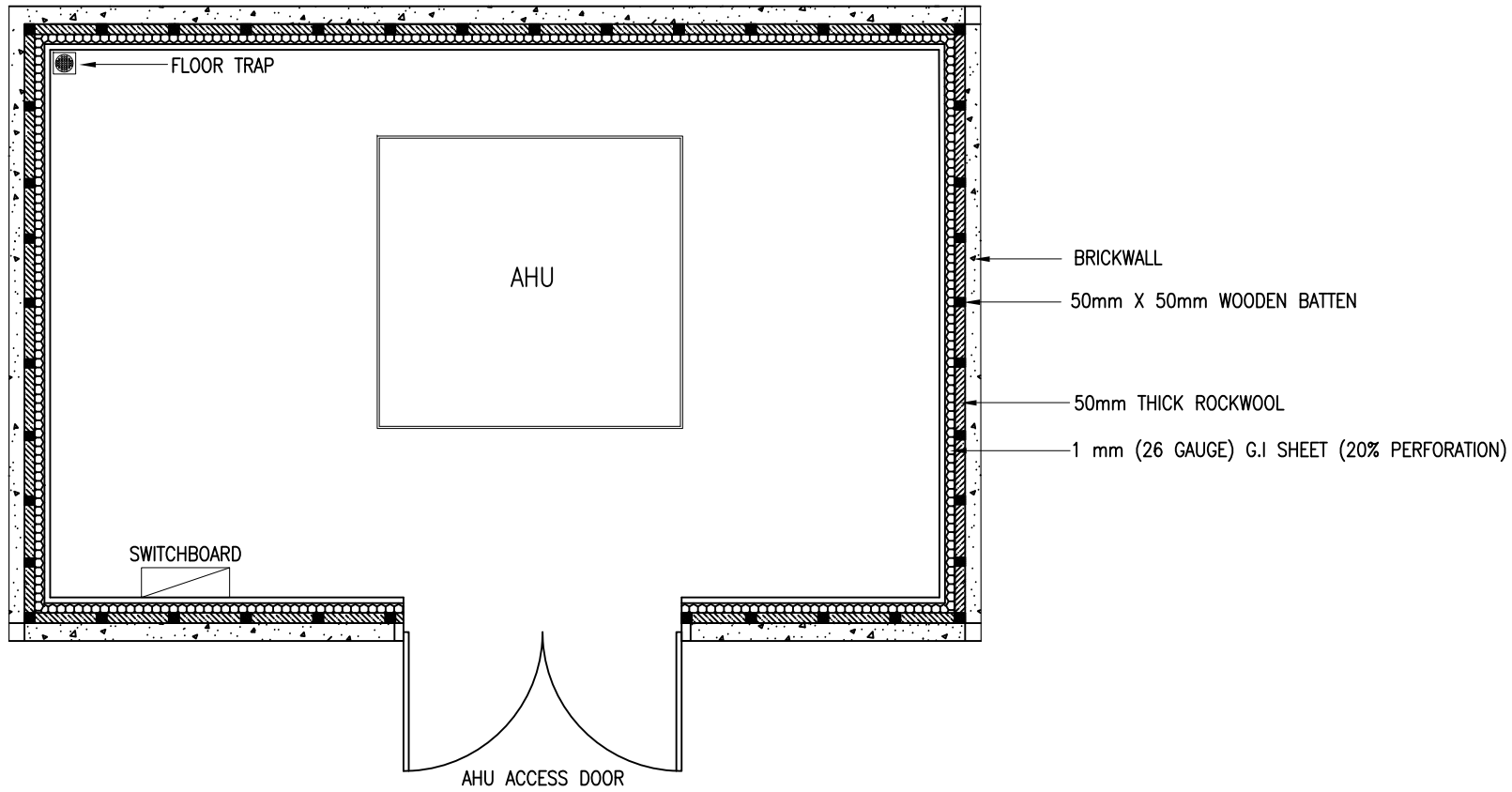

PLAN VIEW

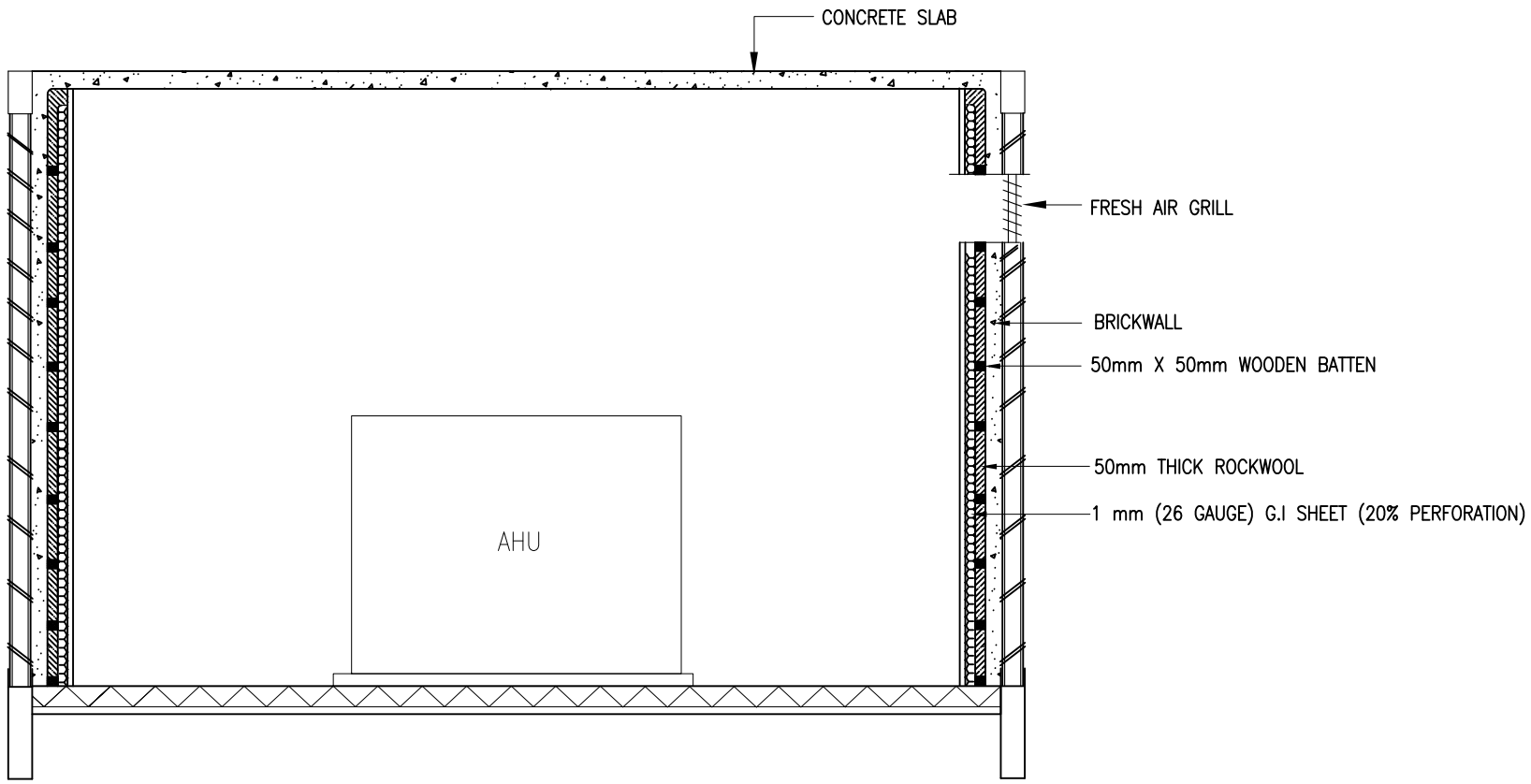

SECTION VIEW

NOTE:

JKR MEKANIKAL

JASA KEPADA RAKYAT

CAWANGAN KEJURUTERAAN MEKANIKAL
Ibu Pejabat JKR Malaysia

AIR CONDITIONING SYSTEM

DETAIL OF AHU ROOM INSULATION

DATE	SCALE
2017	N.T.S

DRAWING NUMBER

CKM/STD/AC/AHU/REV2017/07

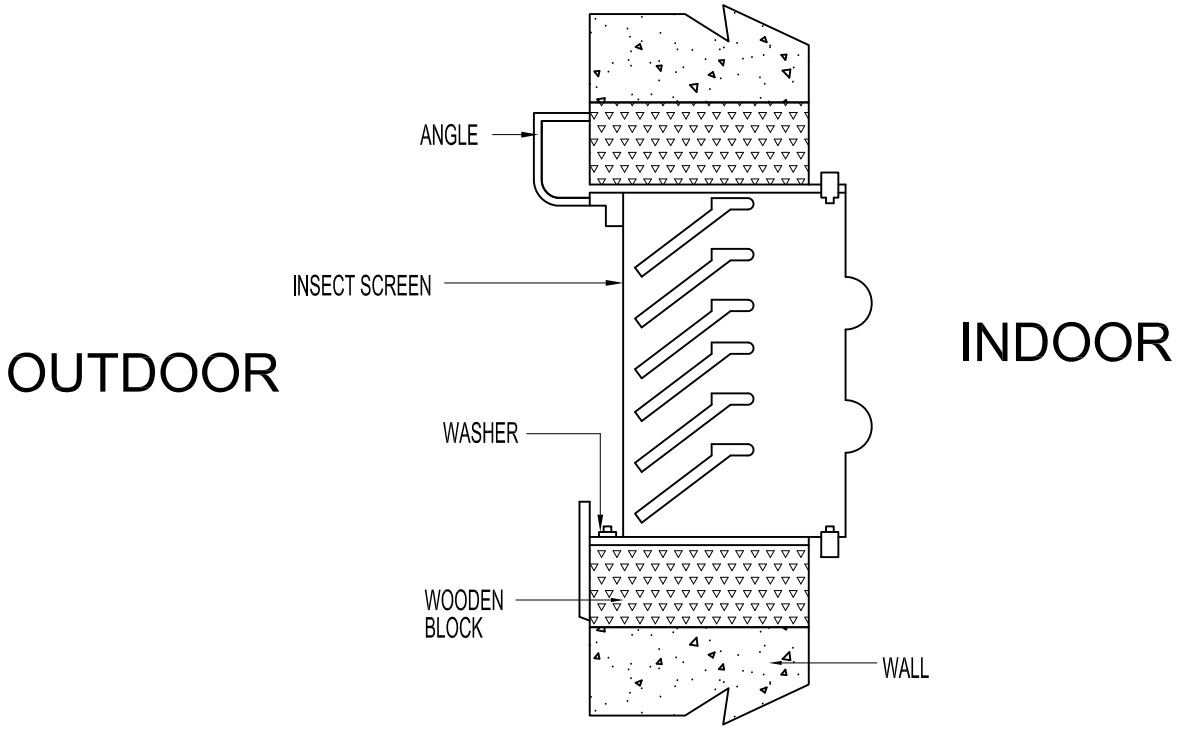

FRESH AIR INTAKE GRILL

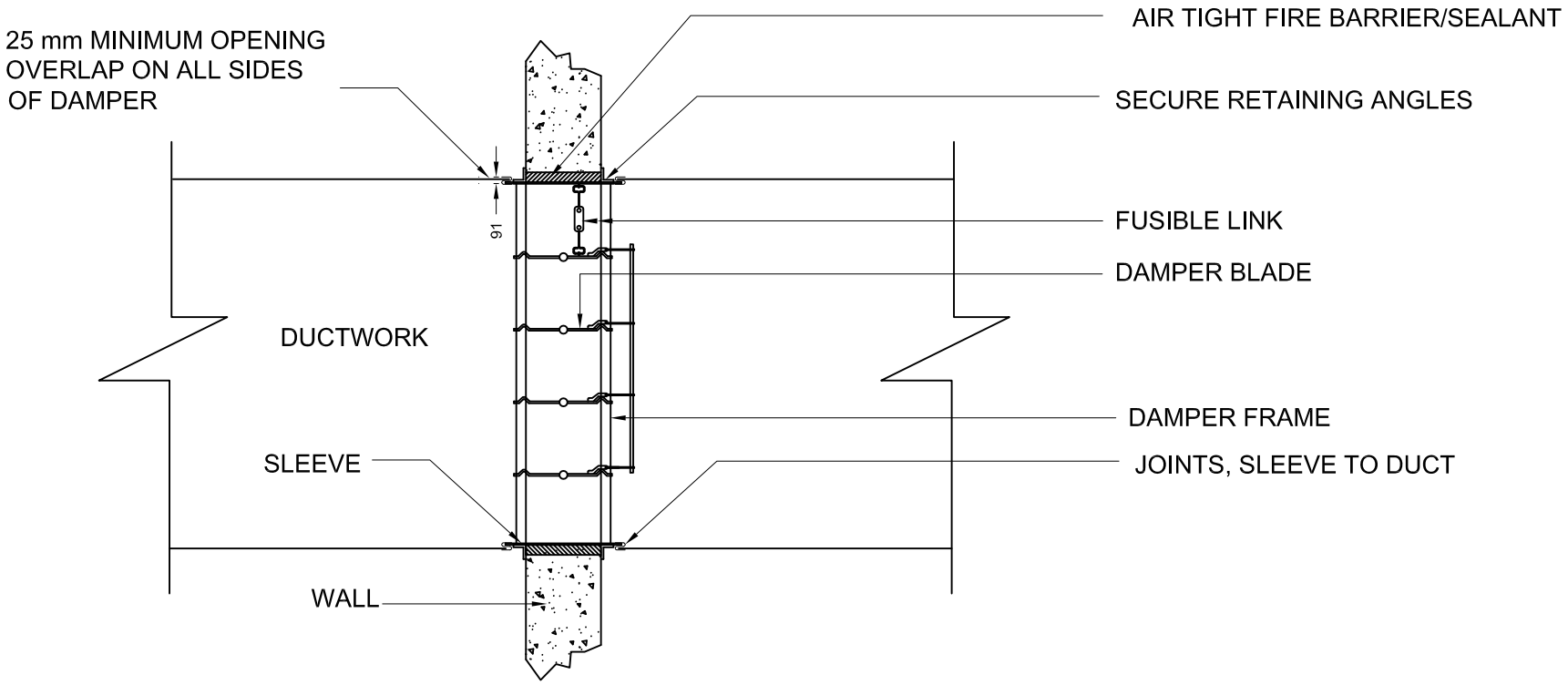

FIRE DAMPER INSTALLATION DETAIL

NOTE:

JKR MEKANIKAL

JASA KEPADA RAKYAT

CAWANGAN KEJURUTERAAN MEKANIKAL
Ibu Pejabat JKR Malaysia

AIR CONDITIONING SYSTEM

FIRE DAMPER INSTALLATION DETAIL

DATE	SCALE
2017	N.T.S

DRAWING NUMBER

CKM/STD/AC/AHU/REV2017/08

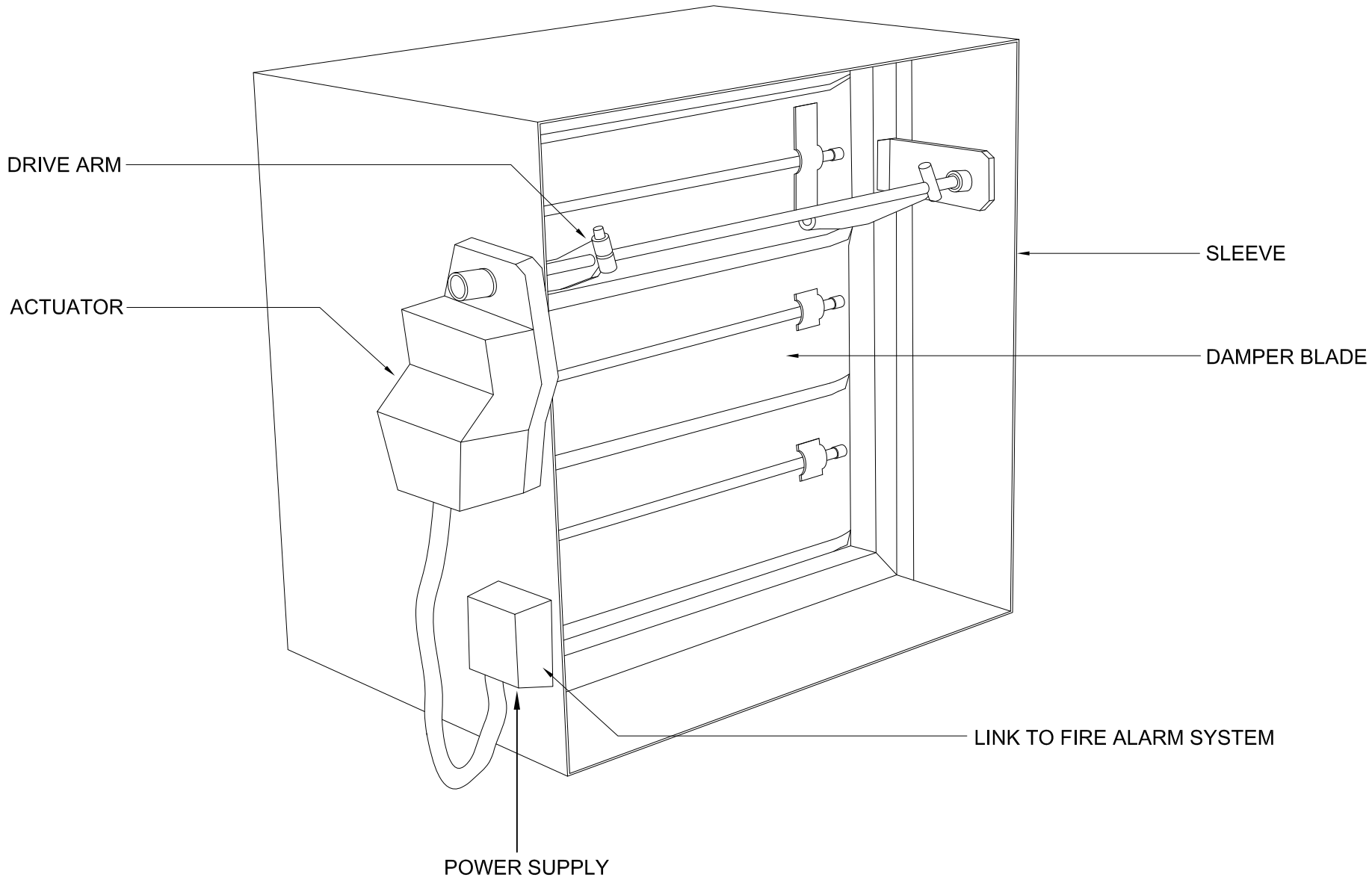

MOTORISED FIRE DAMPER DETAIL

NOTE:

JKR MEKANIKAL

JASA KEPADA RAKYAT

CAWANGAN KEJURUTERAAN MEKANIKAL
Ibu Pejabat JKR Malaysia

AIR CONDITIONING SYSTEM

MOTORISED FIRE DAMPER DETAIL

DATE	SCALE
2017	N.T.S

DRAWING NUMBER

CKM/STD/AC/AHU/REV2017/09

DUCTING

JKR
MEKANIKAL

JASA KEPADA RAKYAT

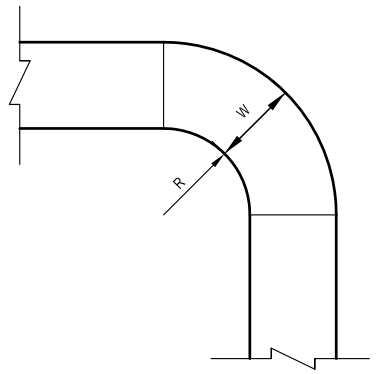

(R) – GREATER THAN OR EQUAL TO (W)
TYPE 1 – RADIUSED BEND

TYPE 1 RADIUSED BEND

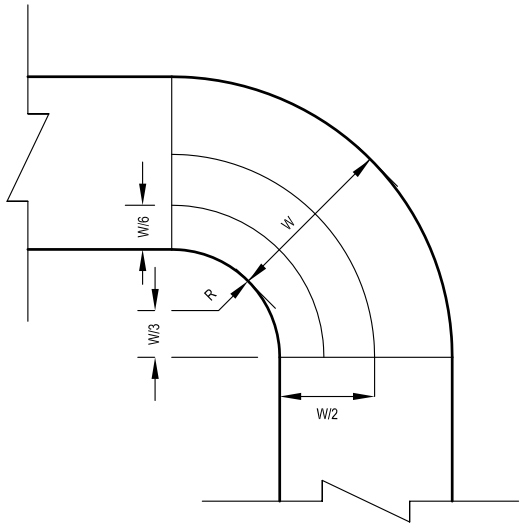

(R) – PREFERABLY W/4 BUT NOT LESS THAN 3"

TYPE 2 RADIUSED BEND

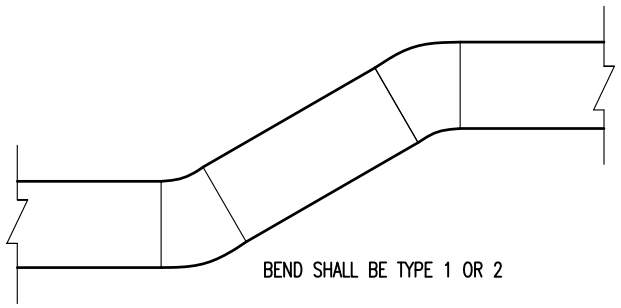

OFFSET DUCT

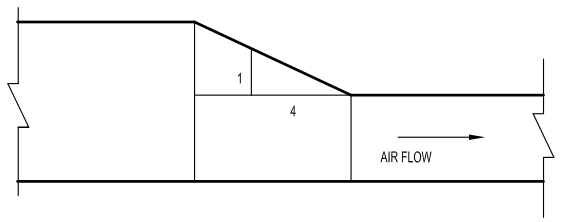

SLOPE OF ANY SIDE SHALL NOT EXCEED 1:4

CONVERGING SECTION (SUPPLY DUCT)

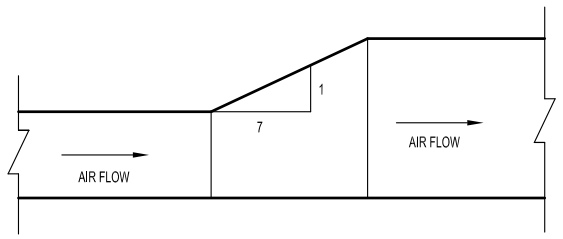

SLOPE OF ANY SIDE SHALL NOT EXCEED 1:7

DIVERGING SECTION (RETURN DUCT)

NOTE:

JKR MEKANIKAL

JASA KEPADA RAKYAT

CAWANGAN KEJURUTERAAN MEKANIKAL
Ibu Pejabat JKR Malaysia

AIR CONDITIONING SYSTEM

DUCT CONSTRUCTION DETAIL

DATE	SCALE
2017	N.T.S

DRAWING NUMBER
CKM/STD/AC/DUCT/REV2017/01

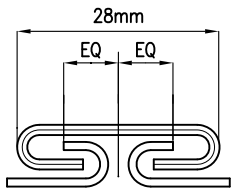

DRIVE SLIP

SLIP JOINT

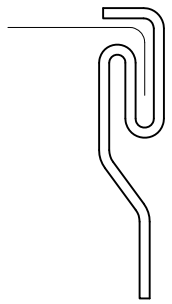

PITTSBURGH LOCK

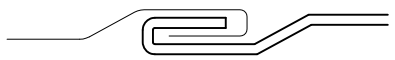

ACME LOCK GROOVE SEAM

LONGITUDINAL SEAMS

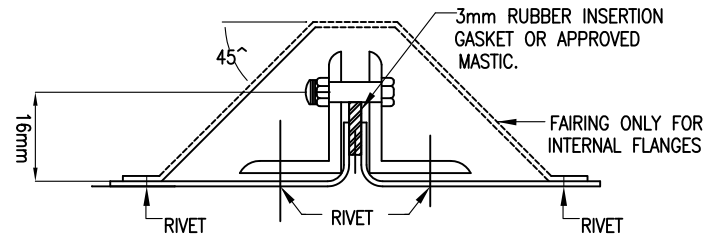

FLANGED JOINT

TRANSVERSE JOINTS

NOTE :

ALL DUCT JOINTS (SLIP AND TRANSVERSE) SHALL BE APPLIED WITH APPROVED DUCT SEALANTS. BITUMINOUS DUCT SEALANT IS STRICTLY PROHIBITED.

SCHEDULE OF DUCT CONSTRUCTION

Max. Size of Duct (MM)	Thickness of Sheet Metal (MM)	Hanger rod size for ducts (MM)	Trapeze angle (MM)	Type of transverse joint connection	Type of bracing
UP TO 300	0.5 (26 SWG)	6.0	25 X 25 X 3	S.Drive, pocket or bar slips, on 7' 10" centers	None
301 TO 450	0.6 (24 SWG)	6.0	25 X 25 X 3		
451 TO 750	0.6 (24 SWG)	6.0	25 X 25 X 3	S.Drive, 1" pocket or 1" bar slips of 7' 10" centers	1" x 1" x 1/8" angle, 4' from joint
751 TO 1050	0.8 (22 SWG)	9.0	32 X 32 X 3	1 1/2" angle connection, or 1 1/2" pocket, or 1 1/2" bar slips with 1 3/8" x 1/8" bar reinforcement on 7'10" centers	1 1/2" x 1 1/2" x 1/8 angle, 4' from joint
1501 TO 1350	1.0 (20 SWG)	9.0	38 X 38 X 3		
1351 TO 1500	1.0 (20 SWG)	9.0	38 X 38 X 3		
1501 TO 2100	1.2 (18 SWG)	9.0	50 X 50 X 4.5	1 1/2" angle connection, or 1 1/2" pocket, or 1 1/2" bar slips with 1 3/8" x 1/8" bar reinforcement on 3'9" centers	1 1/2" x 1 1/2" x 3/16" diagonal angles or 1 1/2" x 1 1/2 x 3/16" angle, 2' from joint
2101 TO 2400	1.2 (18 SWG)	9.0	50 X 50 X 6		
Above 2400	1.2 (18 SWG)	9.0	50 X 50 X 6	2" angle connection or 2" pocket or 2" bar slips with 2" x 1/8" bar reinforcement on 3'9" centers	2" x 2" x 1/4" diagonal angles or 2" x 2" x 1/4" angle, 2' from joint

SCHEDULE OF DUCT CONSTRUCTION

NOTE:

JKR MEKANIKAL

JASA KEPADA RAKYAT

CAWANGAN KEJURUTERAAN MEKANIKAL
Ibu Pejabat JKR Malaysia

AIR CONDITIONING SYSTEM

DUCT CONSTRUCTION DETAIL

DATE	SCALE
2017	N.T.S

DRAWING NUMBER

CKM/STD/AC/DUCT/REV2017/10

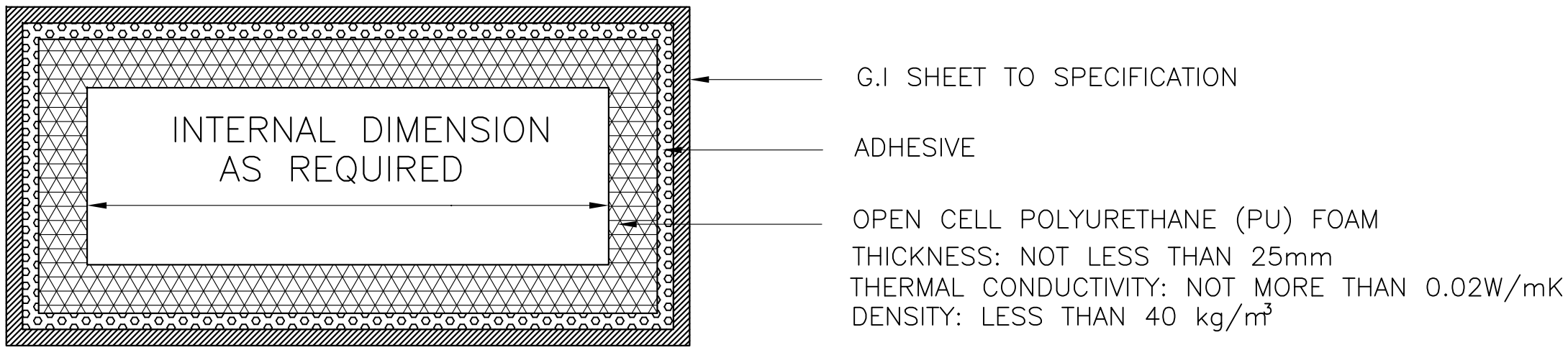

INTERNAL DUCT INSULATION WITH POLYURETHANE (PU)

NOTE:

JKR MEKANIKAL

JASA KEPADA RAKYAT

CAWANGAN KEJURUTERAAN MEKANIKAL
Ibu Pejabat JKR Malaysia

AIR CONDITIONING SYSTEM

INTERNAL DUCT INSULATION
WITH POLYURETHANE (PU)

DATE	SCALE
2017	N.T.S

DRAWING NUMBER

CKM/STD/AC/DUCT/REV2017/11

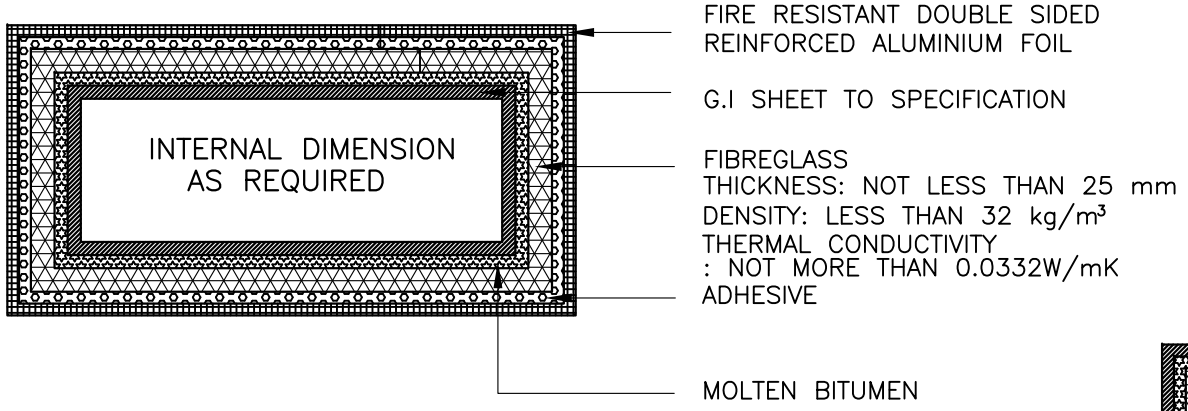

EXTERNAL DUCT INSULATION WITH FIBREGLASS

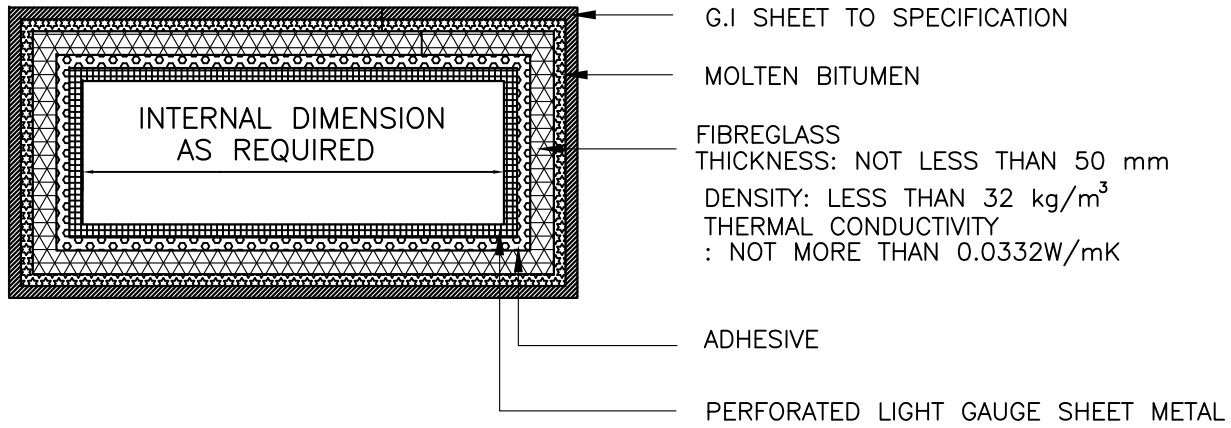

INTERNAL DUCT INSULATION WITH FIBREGLASS

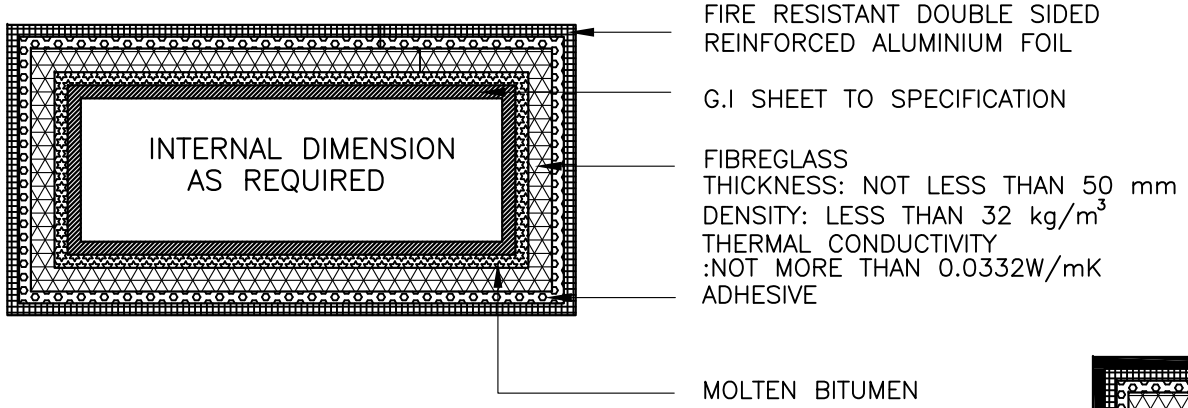

EXTERNAL DUCT INSULATION WITH FIBREGLASS
FOR DUCT INSTALLED IMMEDIATELY
BELOW ROOF OR IN ANY VERTICAL SHAFT

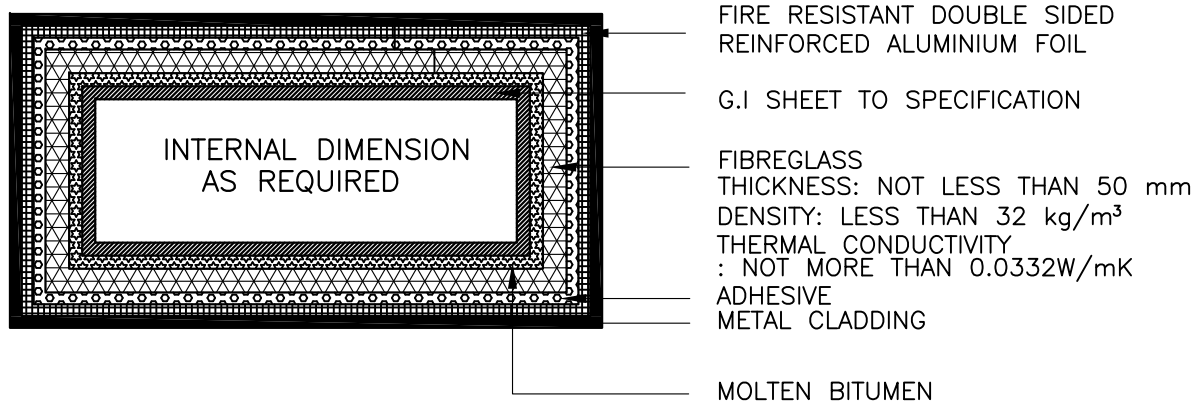

EXTERNAL DUCT INSULATION WITH FIBREGLASS
FOR DUCT INSTALLED INSIDE AHU ROOM OR
EXPOSED TO WEATHER OR ALL DUCTWORKS
FOR SERVING 24 HRS ROOMS.

TYPICAL DUCT INSULATION WITH FIBREGLASS MATERIAL

NOTE:

JKR MEKANIKAL

JASA KEPADA RAKYAT

CAWANGAN KEJURUTERAAN MEKANIKAL
Ibu Pejabat JKR Malaysia

AIR CONDITIONING SYSTEM

TYPICAL DUCT INSULATION
WITH FIBREGLASS MATERIAL

DATE	SCALE
2017	N.T.S

DRAWING NUMBER
CKM/STD/AC/DUCT/REV2017/12

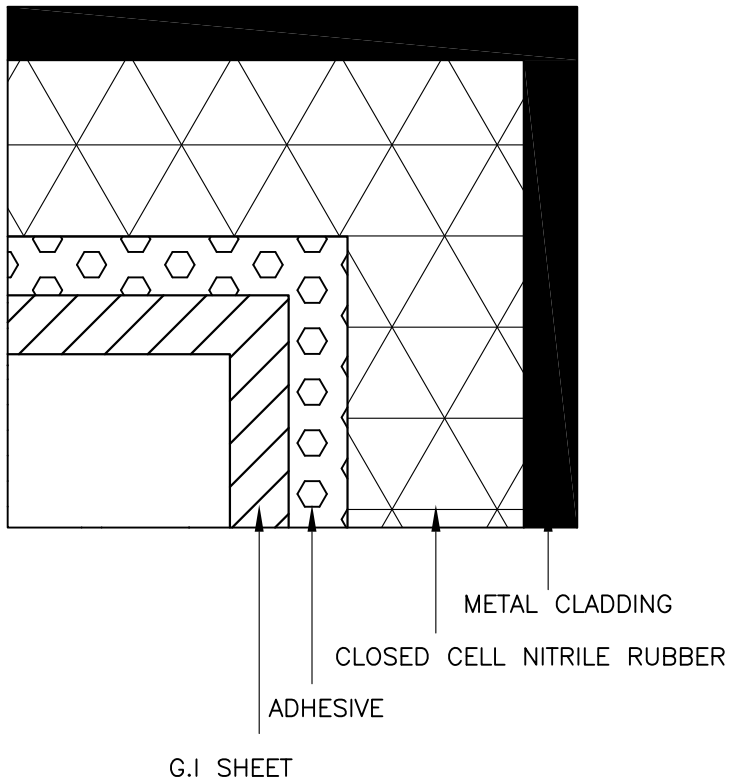

DETAIL A

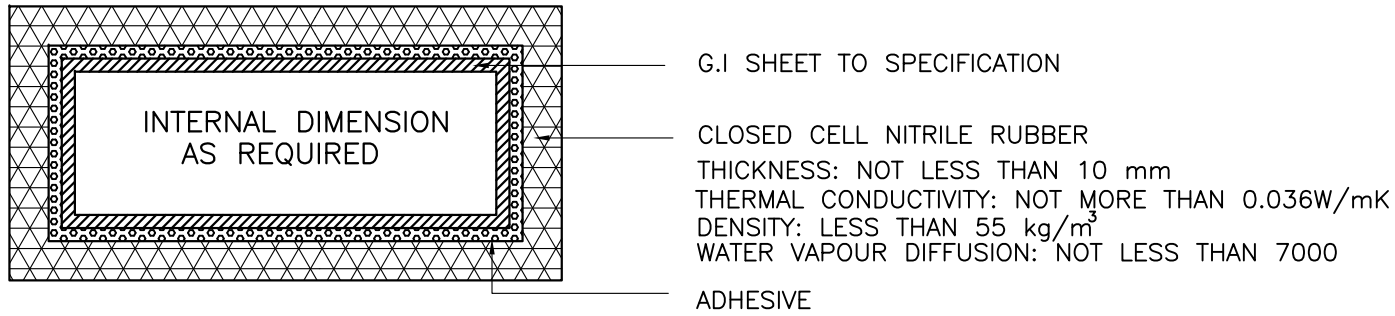

EXTERNAL DUCT INSULATION WITH NITRILE RUBBER

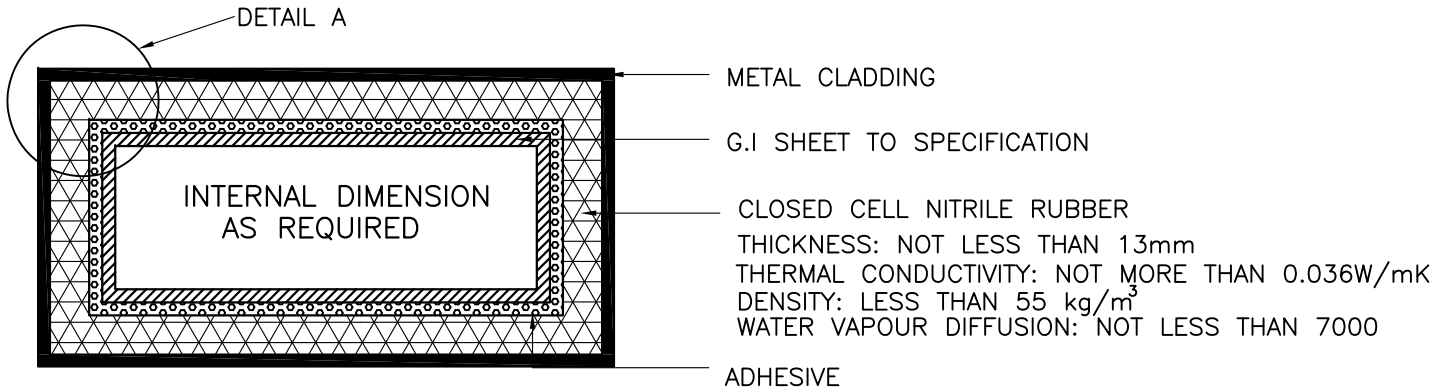

EXTERNAL DUCT INSULATION WITH NITRILE RUBBER
FOR DUCT INSTALLED INSIDE AHU ROOM OR
EXPOSED TO WEATHER OR ALL DUCTWORKS
FOR SERVING 24 HRS ROOMS.

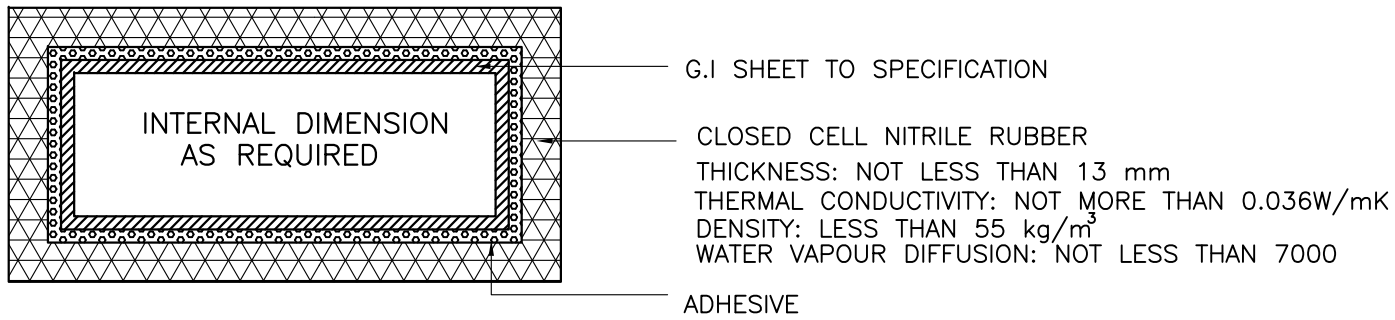

EXTERNAL DUCT INSULATION WITH NITRILE RUBBER
FOR DUCT INSTALLED IMMEDIATELY
BELOW ROOF OR IN ANY VERTICAL SHAFT

TYPICAL DUCT INSULATION WITH CLOSED CELL NITRILE RUBBER MATERIAL

NOTE:

JKR MEKANIKAL

JASA KEPADA RAKYAT

CAWANGAN KEJURUTERAAN MEKANIKAL
Ibu Pejabat JKR Malaysia

AIR CONDITIONING SYSTEM

TYPICAL DUCT INSULATION WITH CLOSED CELL CELL NITRILE RUBBER MATERIAL

DATE	SCALE
2017	N.T.S

DRAWING NUMBER
CKM/STD/AC/DUCT/REV2017/13

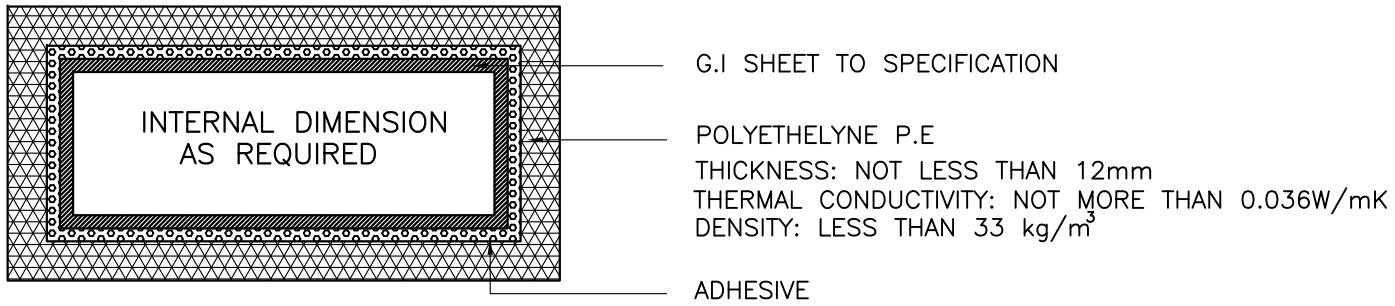

EXTERNAL DUCT INSULATION WITH POLYETHYLENE (PE)

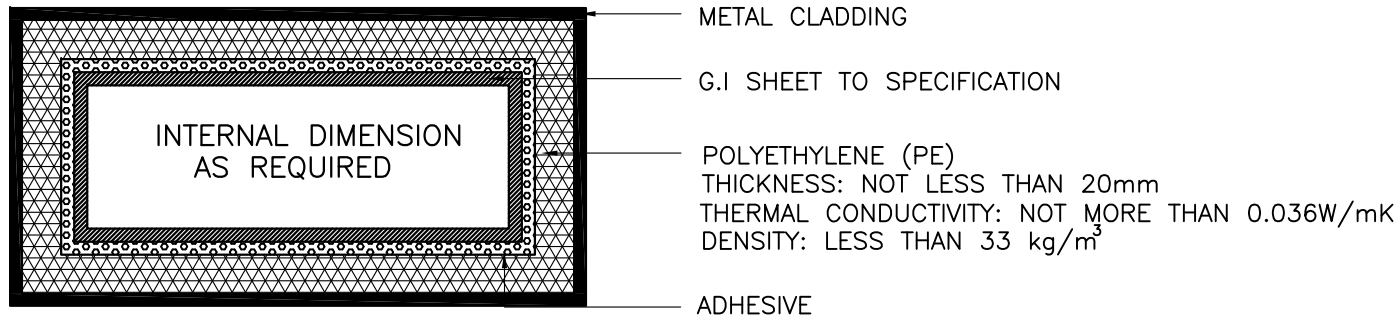

EXTERNAL DUCT INSULATION WITH POLYETHYLENE (PE)
FOR DUCT INSTALLED INSIDE AHU ROOM OR
EXPOSED TO WEATHER OR ALL DUCTWORKS
FOR SERVING 24 HRS ROOMS.

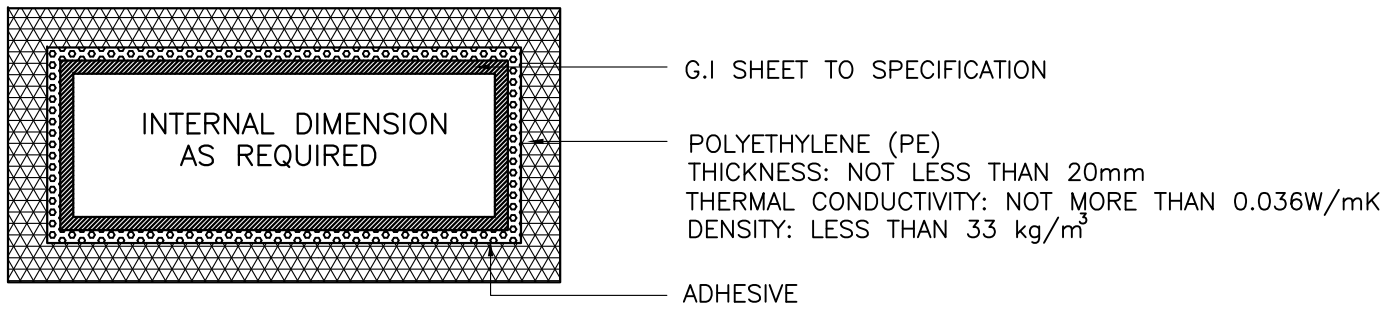

EXTERNAL DUCT INSULATION WITH POLYETHYLENE (PE)
FOR DUCT INSTALLED IMMEDIATELY
BELOW ROOF OR IN ANY VERTICAL SHAFT

TYPICAL DUCT INSULATION WITH POLYETHYLENE (PE) MATERIAL

NOTE : POLYETHYLENE (PE) SHALL NOT BE APPLY FOR INTERNAL DUCT INSULATION.

NOTE:

JASA KEPADA RAKYAT

CAWANGAN KEJURUTERAAN MEKANIKAL
Ibu Pejabat JKR Malaysia

AIR CONDITIONING SYSTEM

TYPICAL DUCT INSULATION
WITH POLYETHYLENE (PE) MATERIAL

DATE	SCALE
2017	N.T.S

DRAWING NUMBER
CKM/STD/AC/DUCT/REV2017/14

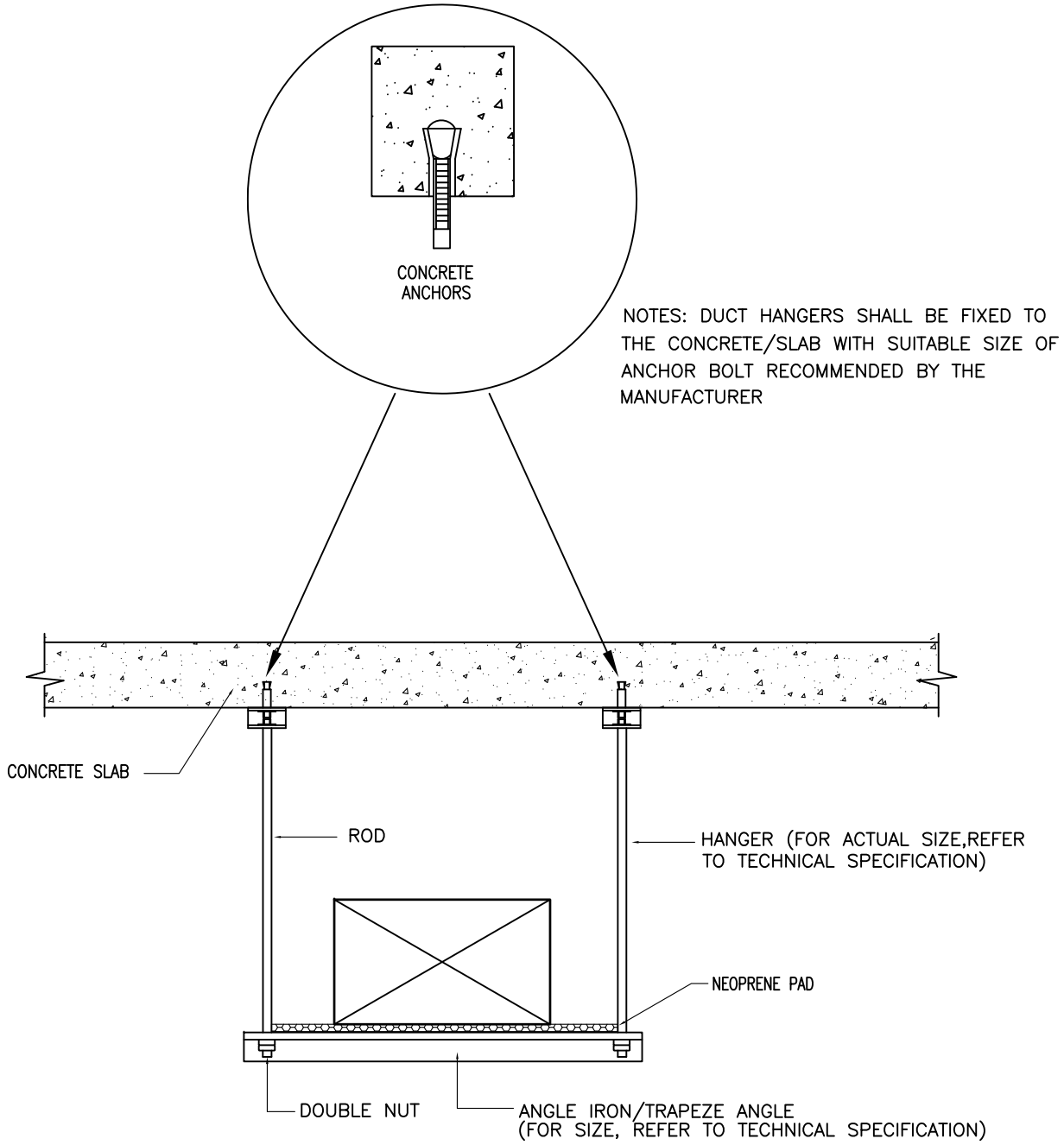

NOTES: DUCT HANGERS SHALL BE FIXED TO THE CONCRETE/SLAB WITH SUITABLE SIZE OF ANCHOR BOLT RECOMMENDED BY THE MANUFACTURER

TYPICAL DUCT SUPPORT AND HANGER (TRAPEZE ANGLE) OUTSIDE MECHANICAL ROOM

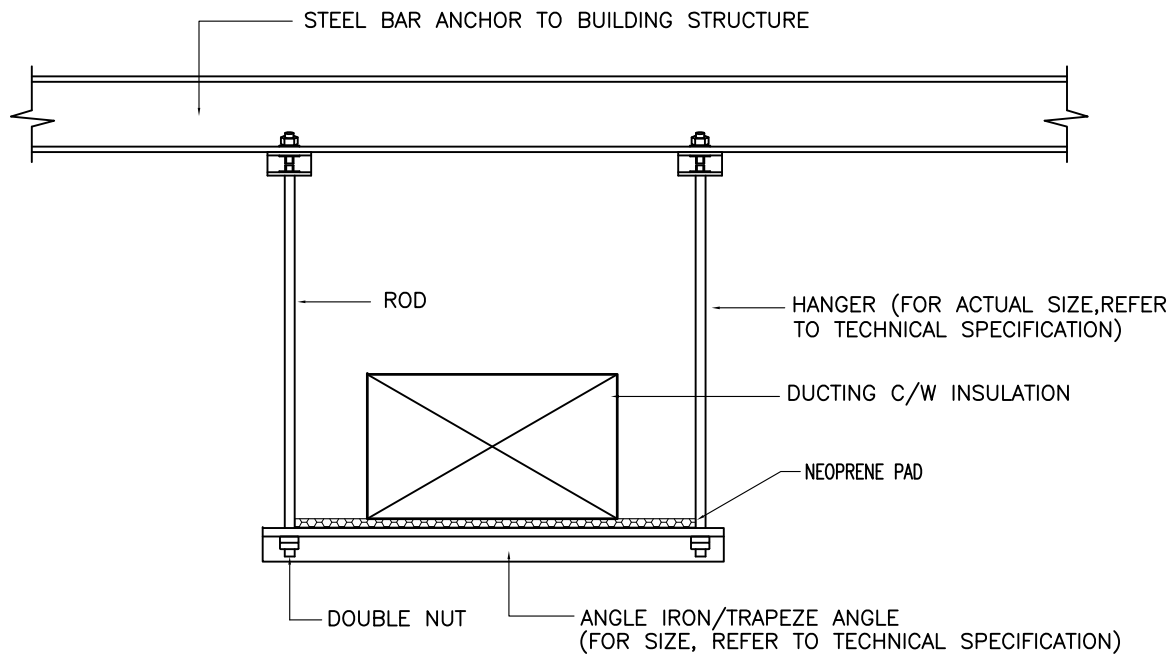

TYPICAL DUCT SUPPORT AND HANGER OUTSIDE MECHANICAL ROOM

NOTE:

JKR MEKANIKAL

JASA KEPADA RAKYAT

CAWANGAN KEJURUTERAAN MEKANIKAL
Ibu Pejabat JKR Malaysia

AIR CONDITIONING SYSTEM

DUCT SUPPORT DETAIL
(OUTSIDE MECHANICAL ROOM)

DATE	SCALE
2017	N.T.S

DRAWING NUMBER

CKM/STD/AC/DUCT/REV2017/15

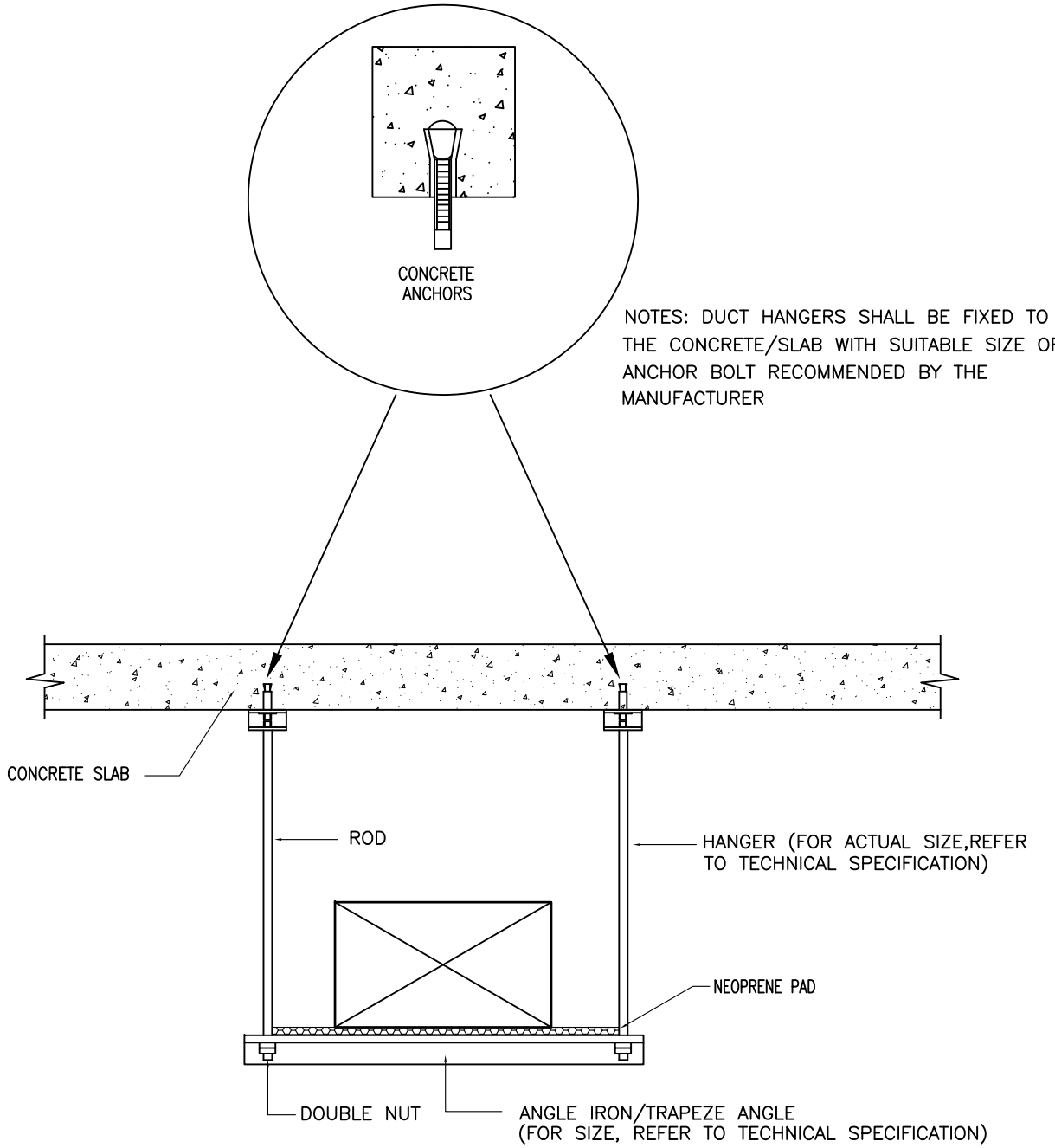

NOTES: DUCT HANGERS SHALL BE FIXED TO THE CONCRETE/SLAB WITH SUITABLE SIZE OF ANCHOR BOLT RECOMMENDED BY THE MANUFACTURER

TYPICAL DUCT SUPPORT AND HANGER (TRAPEZE ANGLE) INSIDE MECHANICAL ROOM

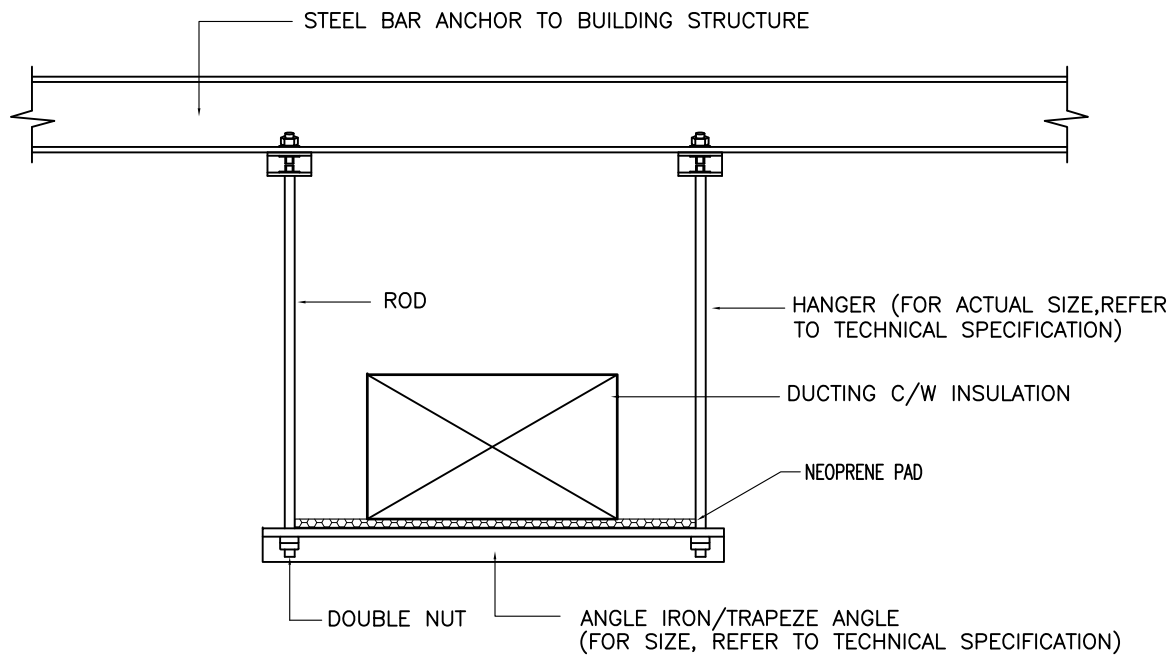

TYPICAL DUCT SUPPORT AND HANGER INSIDE MECHANICAL ROOM

NOTE:

JKR MEKANIKAL

JASA KEPADA RAKYAT

CAWANGAN KEJURUTERAAN MEKANIKAL
Ibu Pejabat JKR Malaysia

AIR CONDITIONING SYSTEM

DUCT SUPPORT DETAIL
(INSIDE MECHANICAL ROOM)

DATE	SCALE
2017	N.T.S

DRAWING NUMBER
CKM/STD/AC/DUCT/REV2017/16

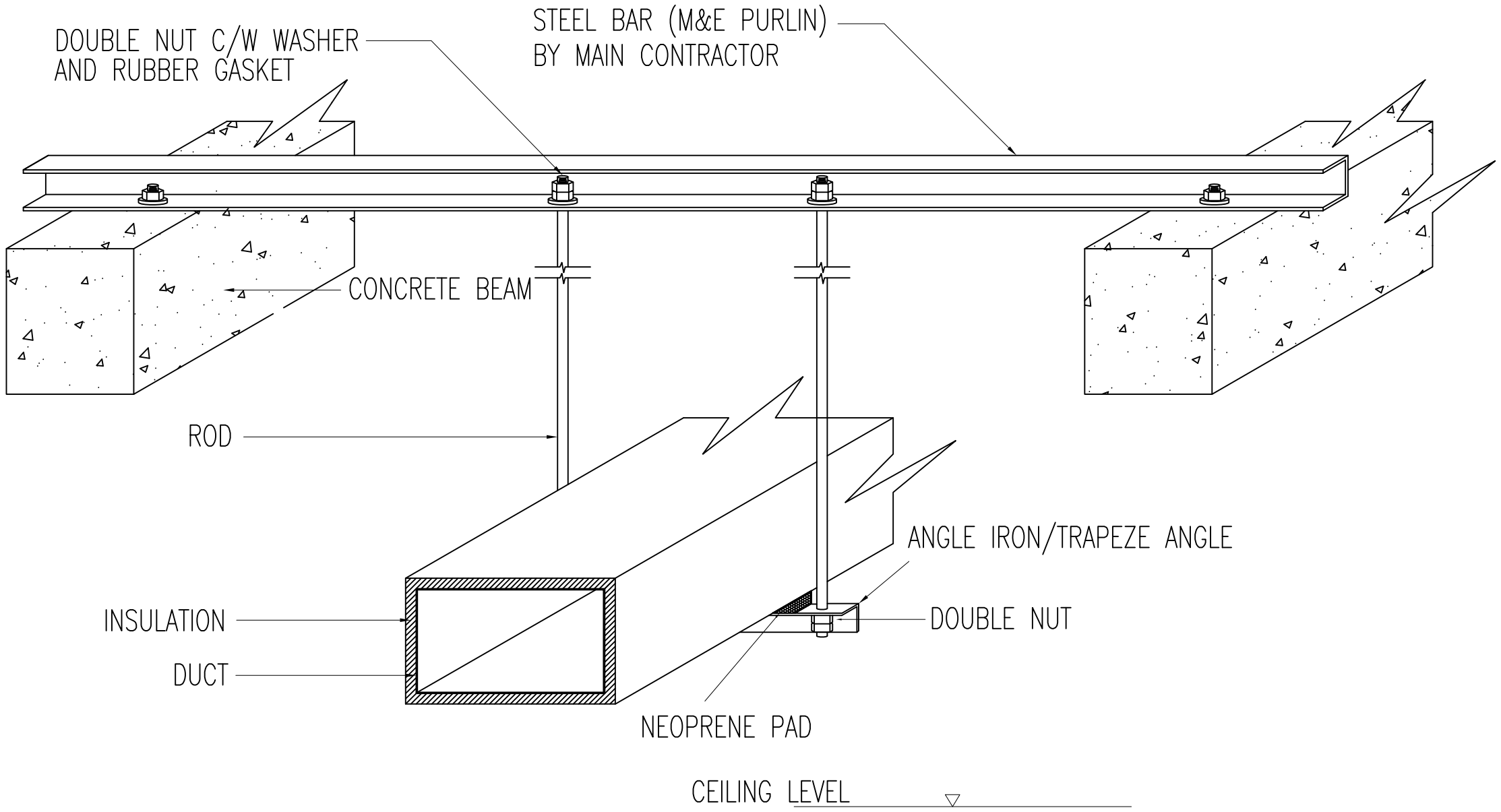

TYPICAL DUCT SUPPORT AND HANGER (UNDER THE ROOF)

NOTE:

JKR MEKANIKAL

JASA KEPADA RAKYAT

CAWANGAN KEJURUTERAAN MEKANIKAL
Ibu Pejabat JKR Malaysia

AIR CONDITIONING SYSTEM

DUCT SUPPORT DETAIL (UNDER THE ROOF)

DATE	SCALE
2017	N.T.S

DRAWING NUMBER

CKM/STD/AC/DUCT/REV2017/17

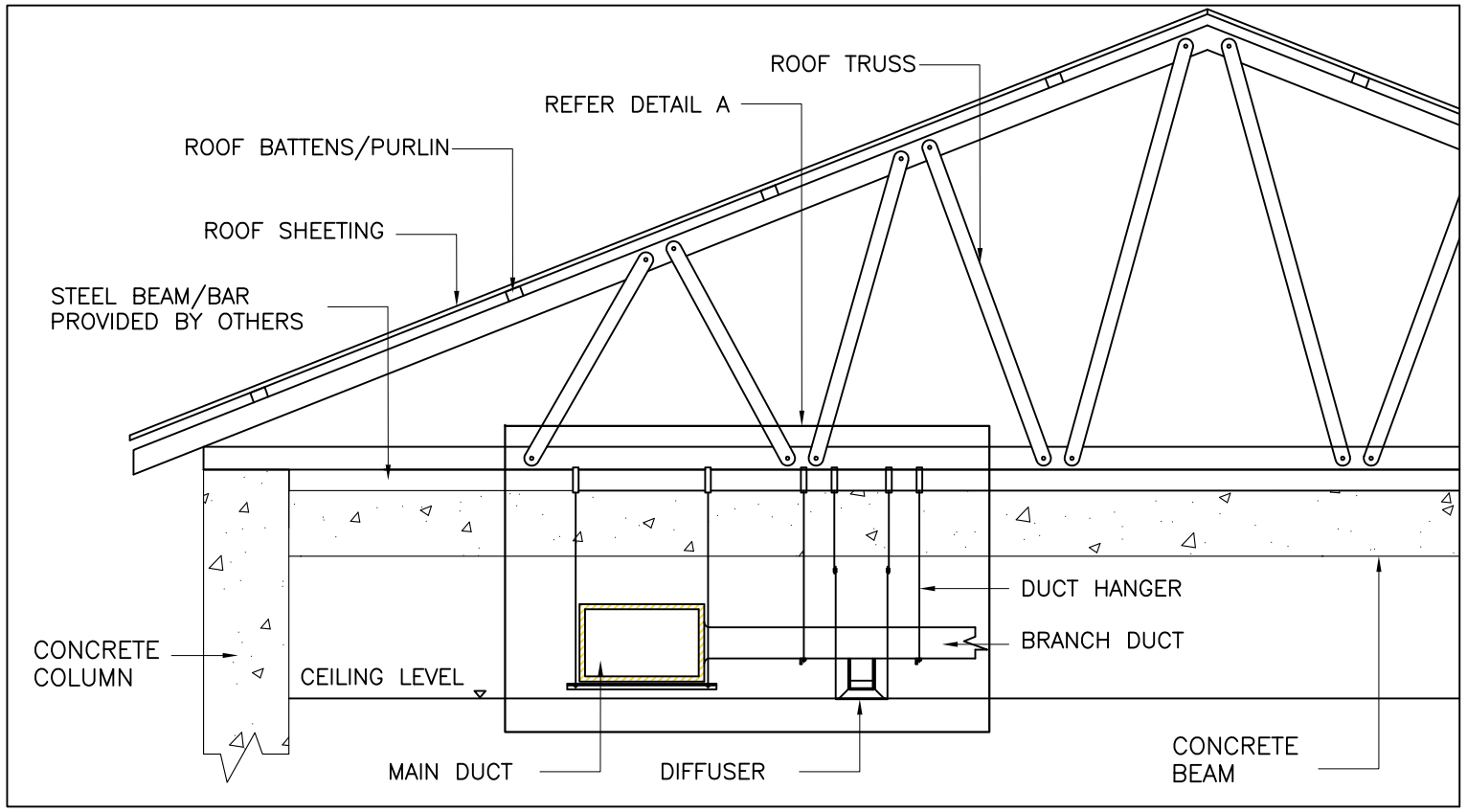

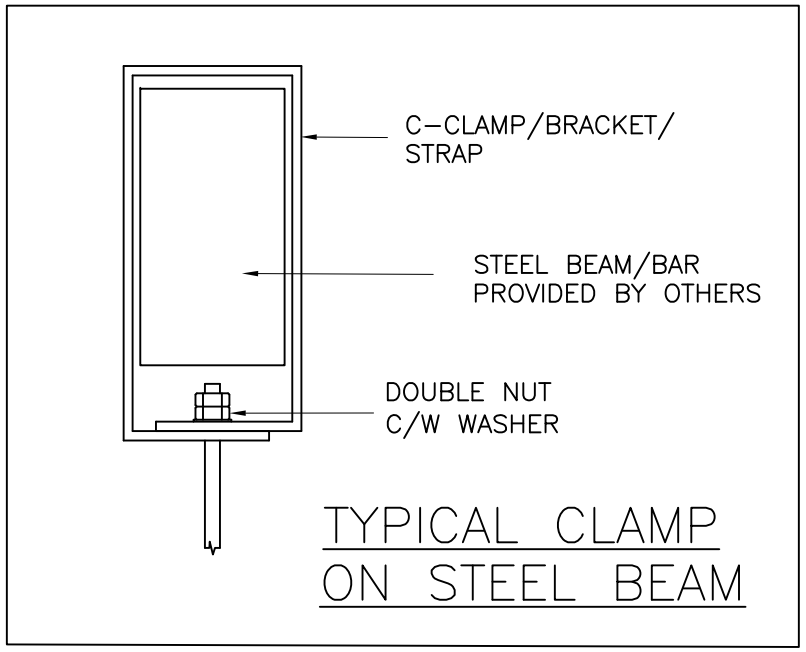

TYPICAL DUCT/ DIFFUSER SUPPORT AND HANGER (UNDER THE ROOF)

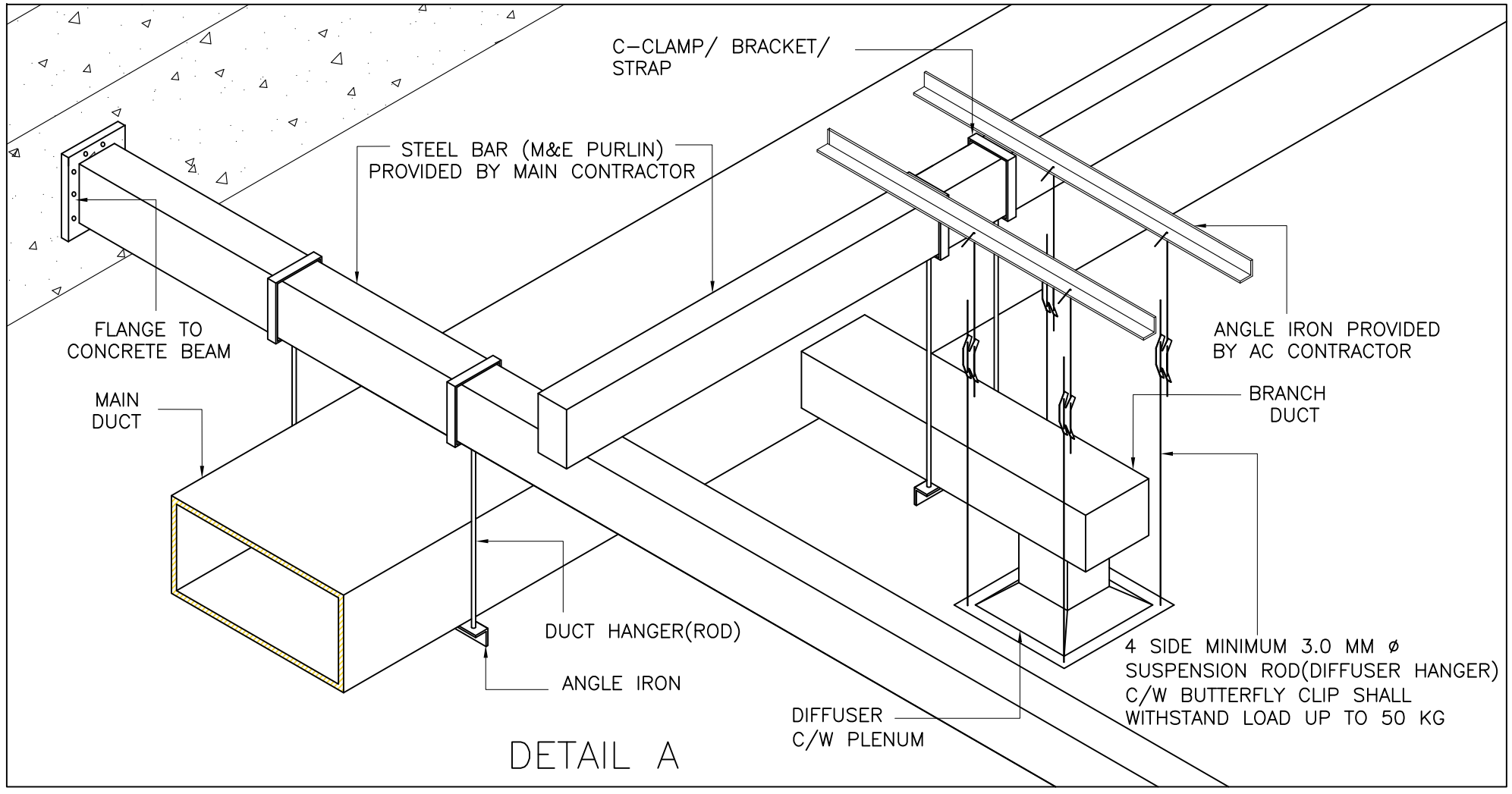

NOTE:

JASA KEPADA RAKYAT

CAWANGAN KEJURUTERAAN MEKANIKAL
Ibu Pejabat JKR Malaysia

AIR CONDITIONING SYSTEM

TYPICAL DUCT/ DIFFUSER SUPPORT
AND HANGER (UNDER THE ROOF)

DATE	SCALE
2017	N.T.S

DRAWING NUMBER
CKM/STD/AC/DUCT/REV2017/18

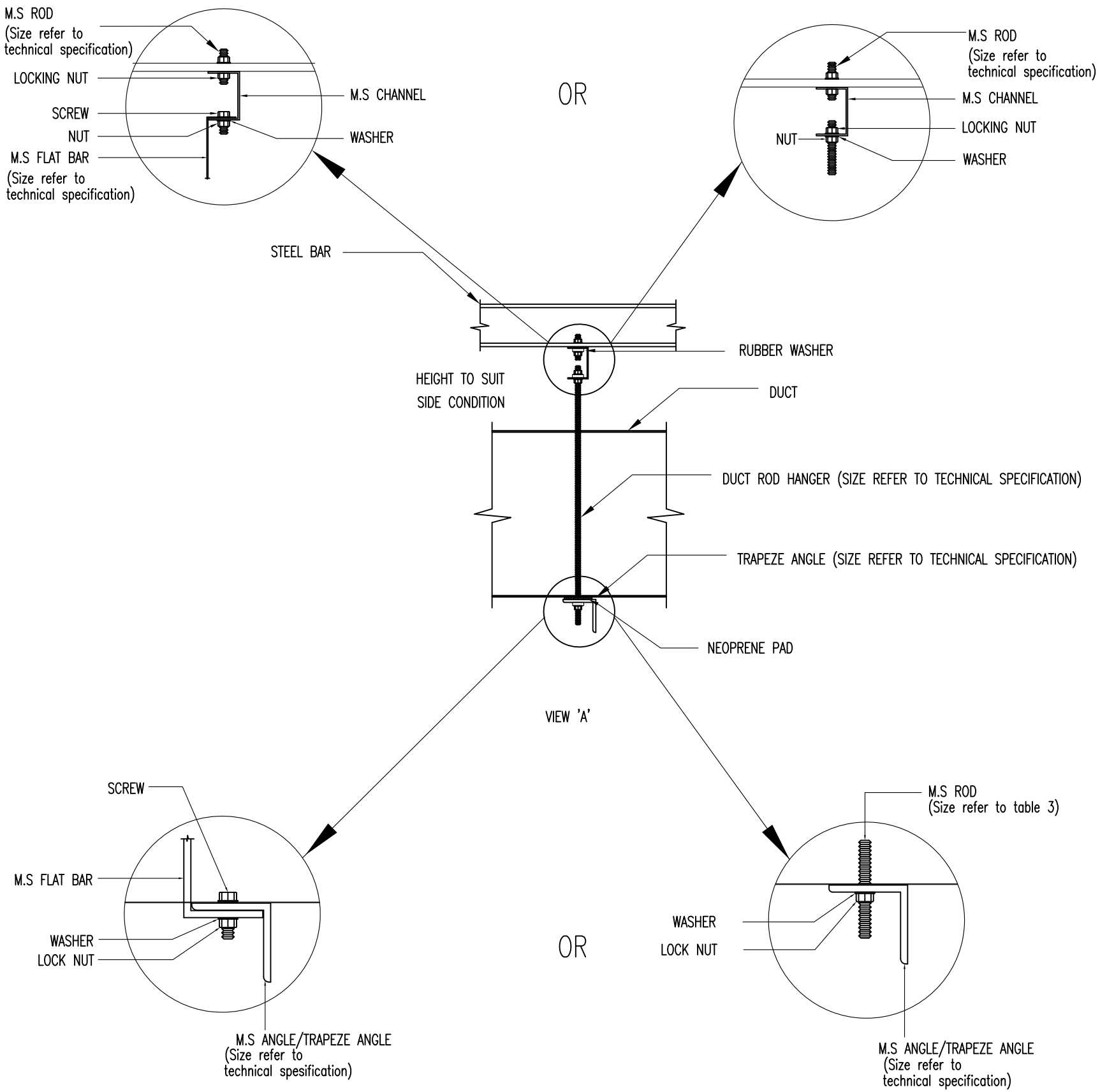

DUCT SUPPORT AND BRACKET DETAIL

NOTE:

JASA KEPADA RAKYAT

CAWANGAN KEJURUTERAAN MEKANIKAL
Ibu Pejabat JKR Malaysia

AIR CONDITIONING SYSTEM

DUCT SUPPORT AND BRACKET DETAIL

DATE	SCALE
2017	N.T.S

DRAWING NUMBER
CKM/STD/AC/DUCT/REV2017/19

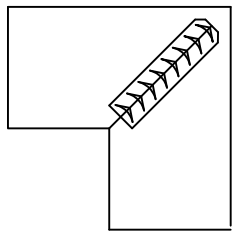

SQUARE ELBOW

FIGURE 1

NOTE:

NUMBER AND CONSTRUCTION OF VANES
SHALL FOLLOW SMACNA, HVAC DUCT CONTRUCTION

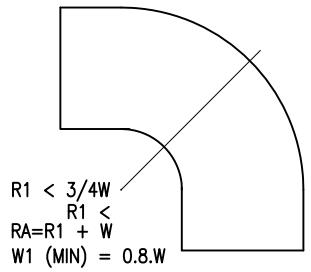

UNVANE ELBOW

FIGURE 2

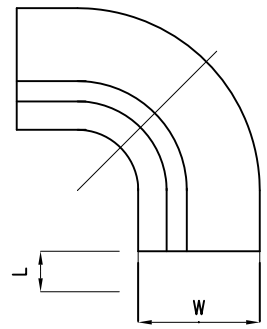

SHORT RADIUS ELBOW

FIGURE 3

VANES	R1 min.	R1 max.
ONE	1/2 W	3/4 W
TWO	1/4 W	1/2 W

Ra = Ri + W
L = W/3
W1 (MIN.) = 0.8W

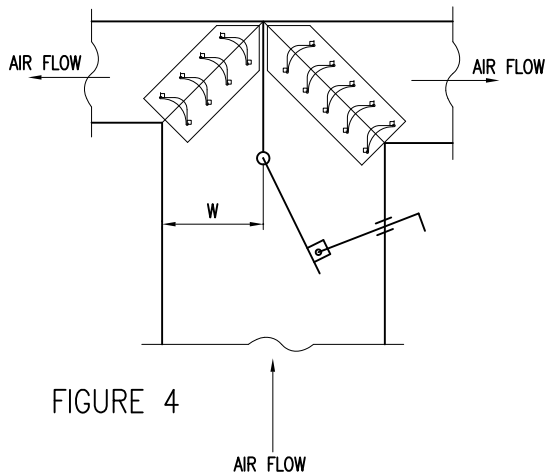

FIGURE 4

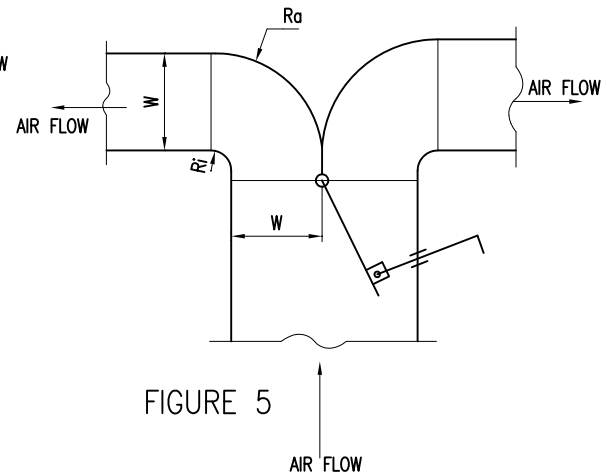

FIGURE 5

TEES AND TAKE-OFFS

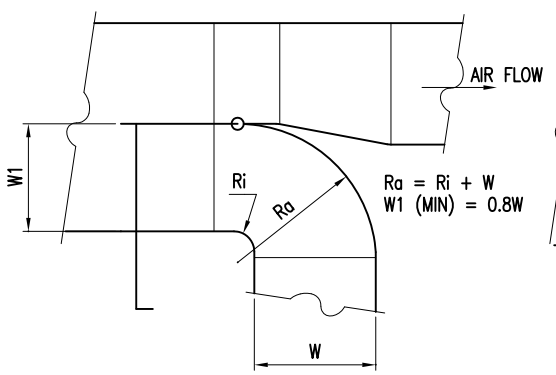

FIGURE 6

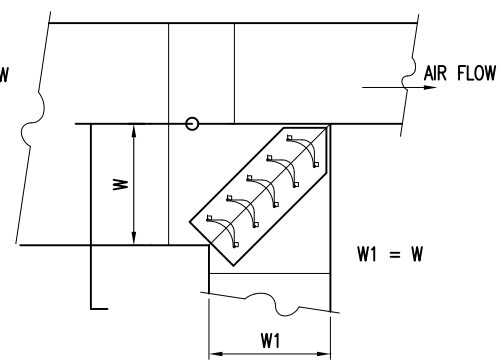

FIGURE 7

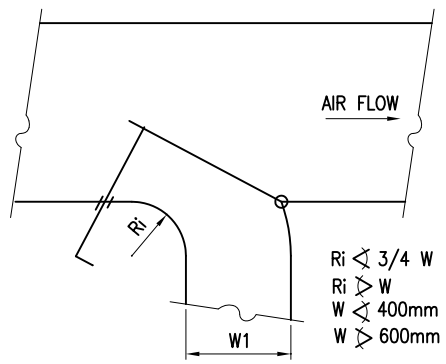

FIGURE 8

TEES AND TAKE-OFFS

NOTE:

JKR MEKANIKAL

JASA KEPADA RAKYAT

CAWANGAN KEJURUTERAAN MEKANIKAL
Ibu Pejabat JKR Malaysia

AIR CONDITIONING SYSTEM

DUCT CONSTRUCTION DETAIL

DATE	SCALE
2017	N.T.S

DRAWING NUMBER

CKM/STD/AC/DUCT/REV2017/02

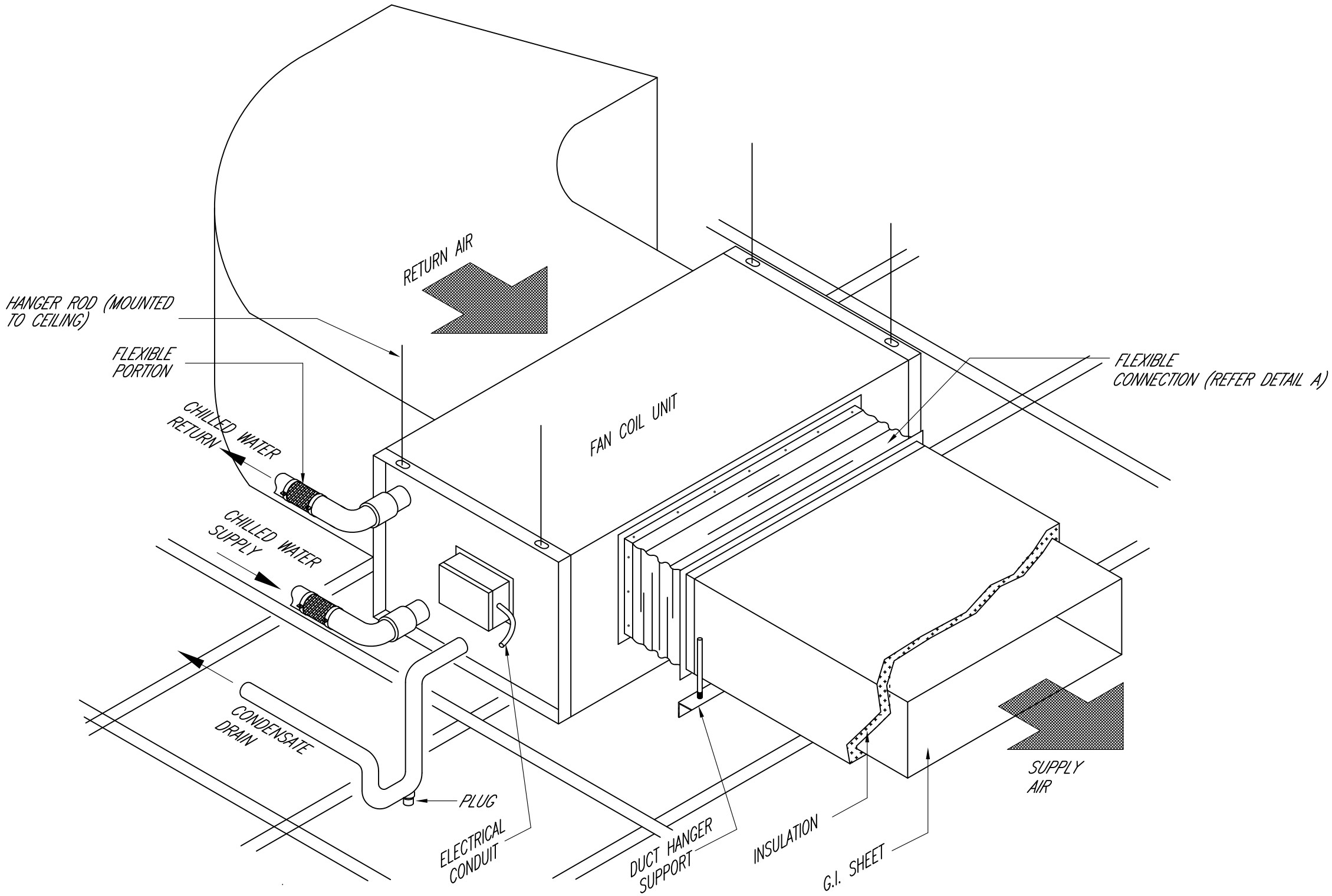

DUCT CONNECTION DETAIL FOR FAN COIL UNIT (FCU)

NOTE:

JKR MEKANIKAL

JASA KEPADA RAKYAT

CAWANGAN KEJURUTERAAN MEKANIKAL
Ibu Pejabat JKR Malaysia

AIR CONDITIONING SYSTEM

DUCT CONNECTION DETAIL
FOR FAN COIL UNIT (FCU)

DATE	SCALE
2017	N.T.S

DRAWING NUMBER

CKM/STD/AC/DUCT/REV2017/20

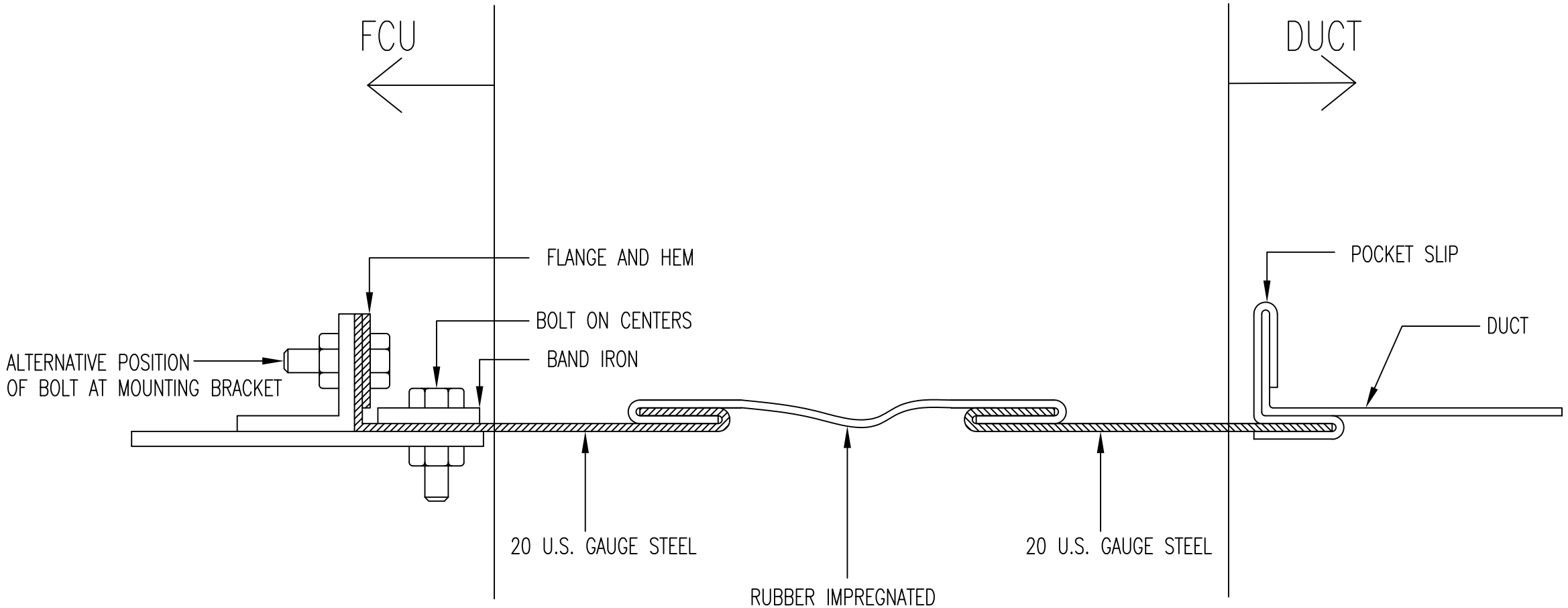

DETAIL A – FLEXIBLE CONNECTION FOR RECTANGULAR (FAN OUTLET/INLET)

NOTE:

JASA KEPADA RAKYAT

CAWANGAN KEJURUTERAAN MEKANIKAL
Ibu Pejabat JKR Malaysia

AIR CONDITIONING SYSTEM

FLEXIBLE CONNECTION FOR
RECTANGULAR (FAN OUTLET/INLET)

DATE	SCALE
2017	N.T.S

DRAWING NUMBER
CKM/STD/AC/DUCT/REV2017/21

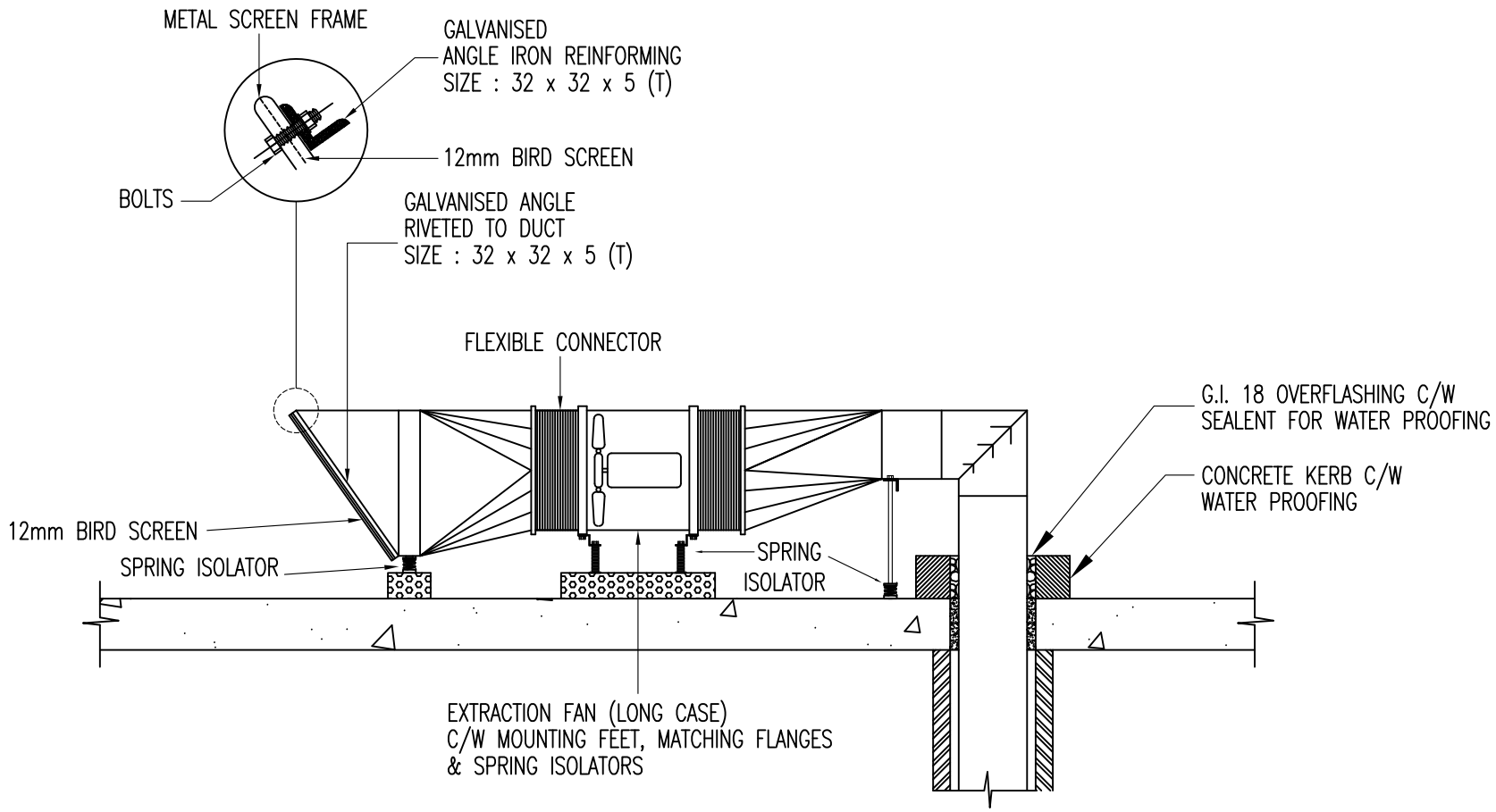

ROOF MOUNTED EXTRACTION FAN DETAILS

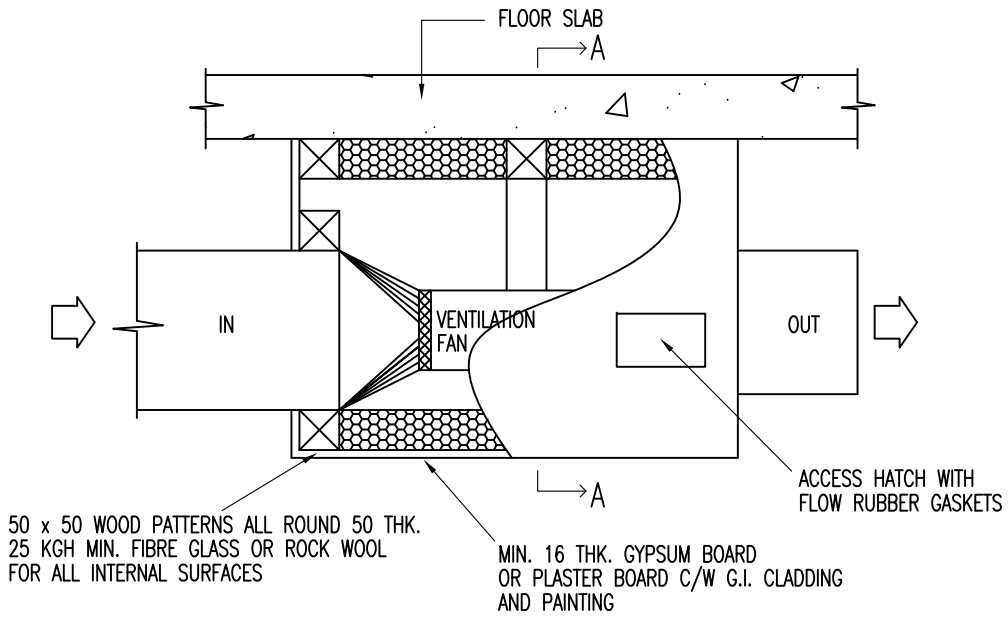

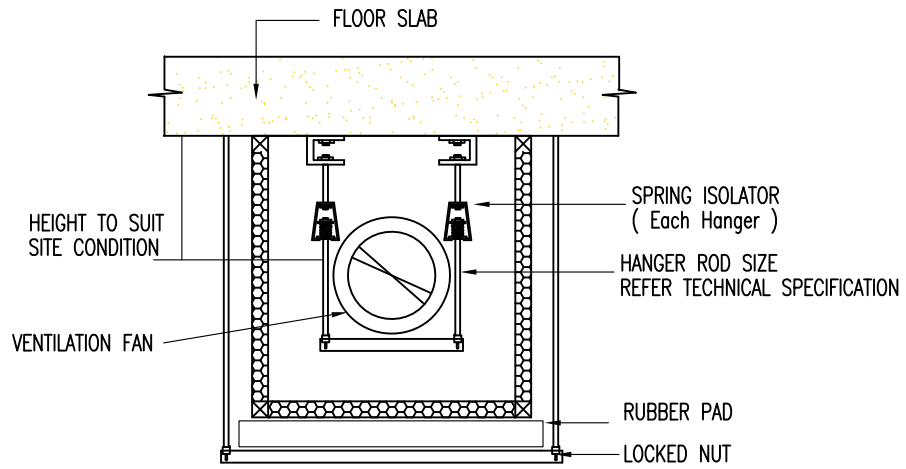

SECTION A–A

NOTE:

1. CLEARANCE MIN. 150mm ALL ROUND THE FAN
2. ALL JOINTS AND JUNCTIONS TO BE CAULKED AIR TIGHT

VENTILATION FAN – NOISE CONTROL DETAIL INSTALLATION

NOTE:

JKR MEKANIKAL

JASA KEPADA RAKYAT

CAWANGAN KEJURUTERAAN MEKANIKAL
Ibu Pejabat JKR Malaysia

AIR CONDITIONING SYSTEM

DETAIL OF VENTILATION SYSTEM INSTALLATION

DATE	SCALE
2017	N.T.S

DRAWING NUMBER

CKM/STD/AC/DUCT/REV2017/22

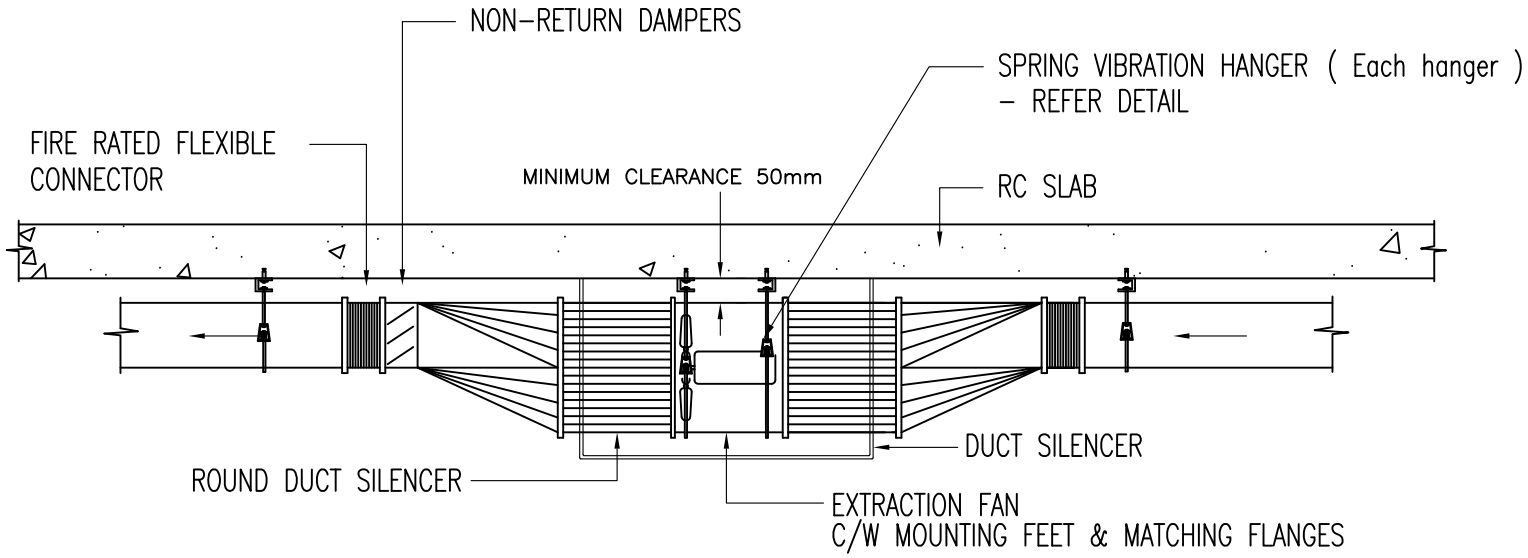

VENTILATION SUPPLY & EXHAUST FAN DETAILS WITH DUCT SILENCERS

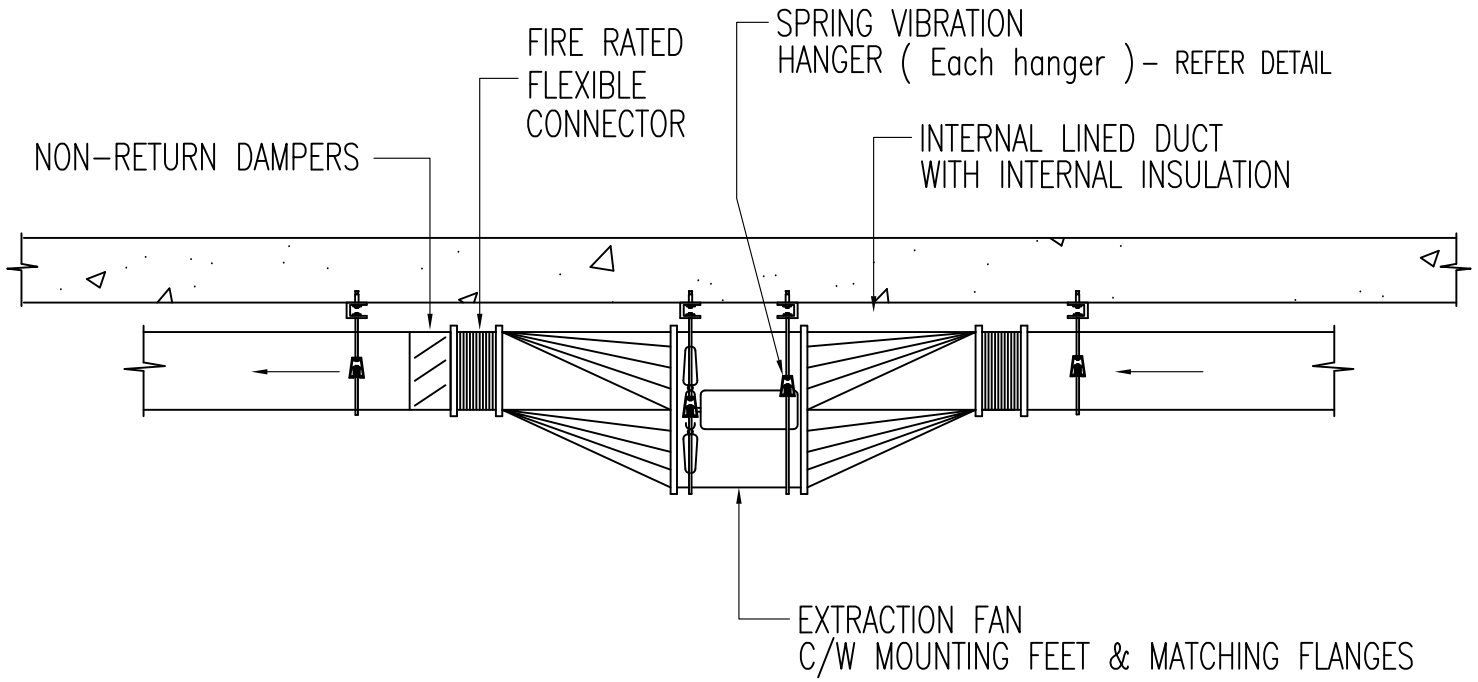

GENERAL VENTILATION FAN DETAILS

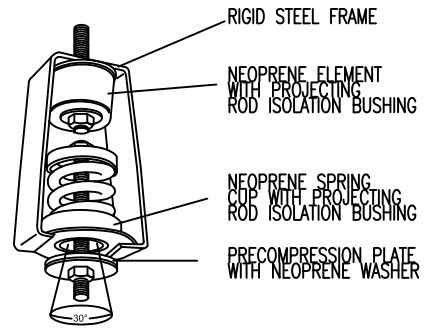

DETAIL SPRING

NOTE:

JKR MEKANIKAL

JASA KEPADA RAKYAT

CAWANGAN KEJURUTERAAN MEKANIKAL
Ibu Pejabat JKR Malaysia

AIR CONDITIONING SYSTEM

DETAIL OF VENTILATION SYSTEM INSTALLATION

DATE	SCALE
2017	N.T.S

DRAWING NUMBER

CKM/STD/AC/DUCT/REV2017/23

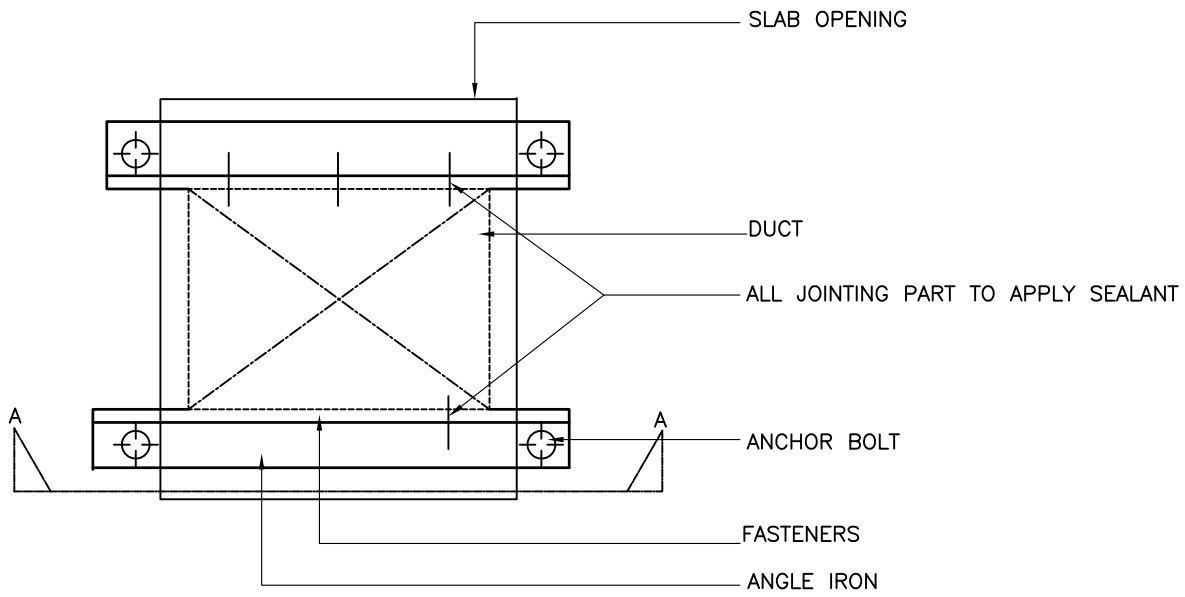

PLAN

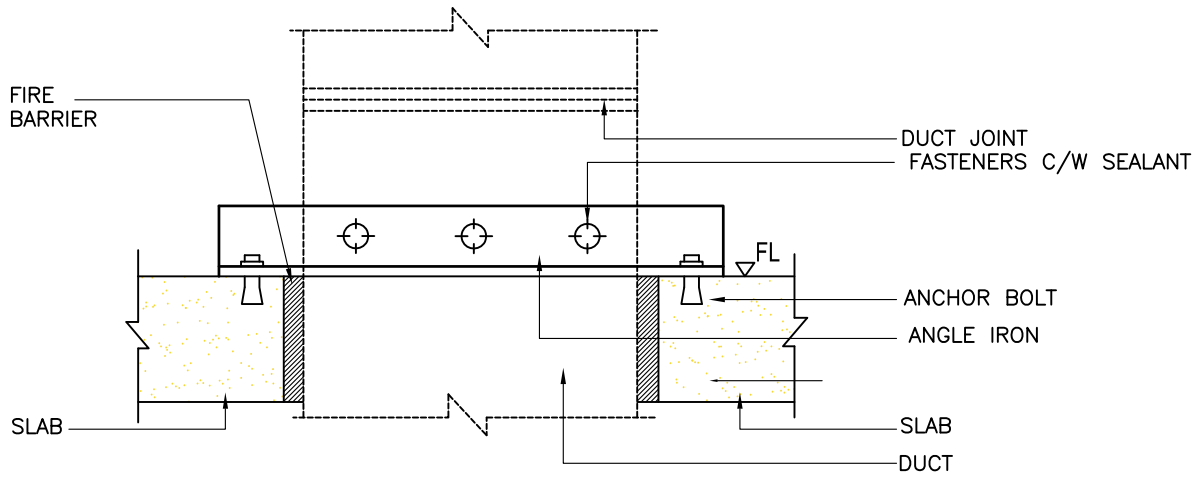

SECTION A–A

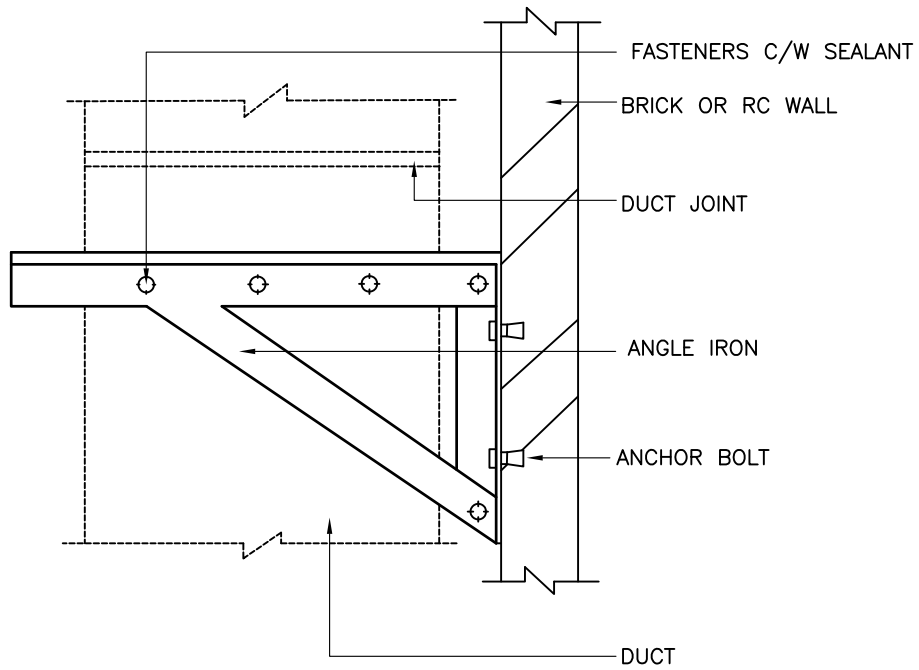

DUCT SUPPORT FOR DUCT RISER
ANCHORING INTO R.C WALL OR BRICK WALL

NOTE:

JKR MEKANIKAL

JASA KEPADA RAKYAT

CAWANGAN KEJURUTERAAN MEKANIKAL
Ibu Pejabat JKR Malaysia

AIR CONDITIONING SYSTEM

DUCT SUPPORT AND BRACKET DETAIL

DATE	SCALE
2017	N.T.S

DRAWING NUMBER

CKM/STD/AC/DUCT/REV2017/24

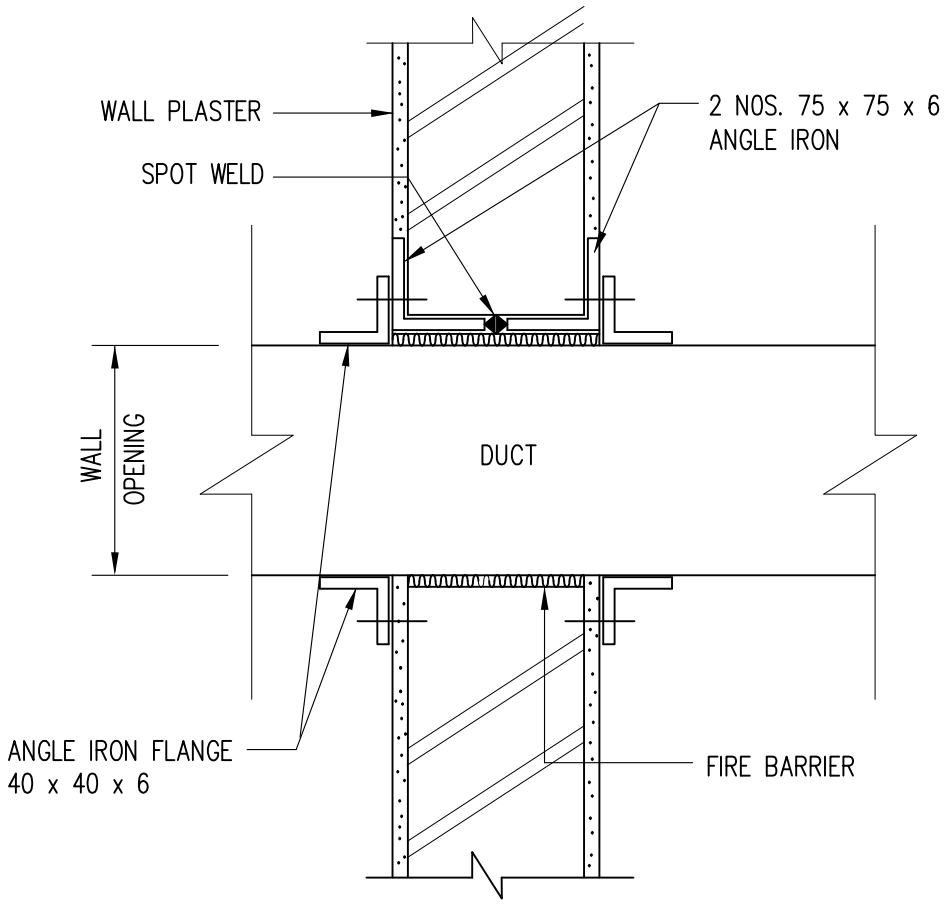

SECTION A/-

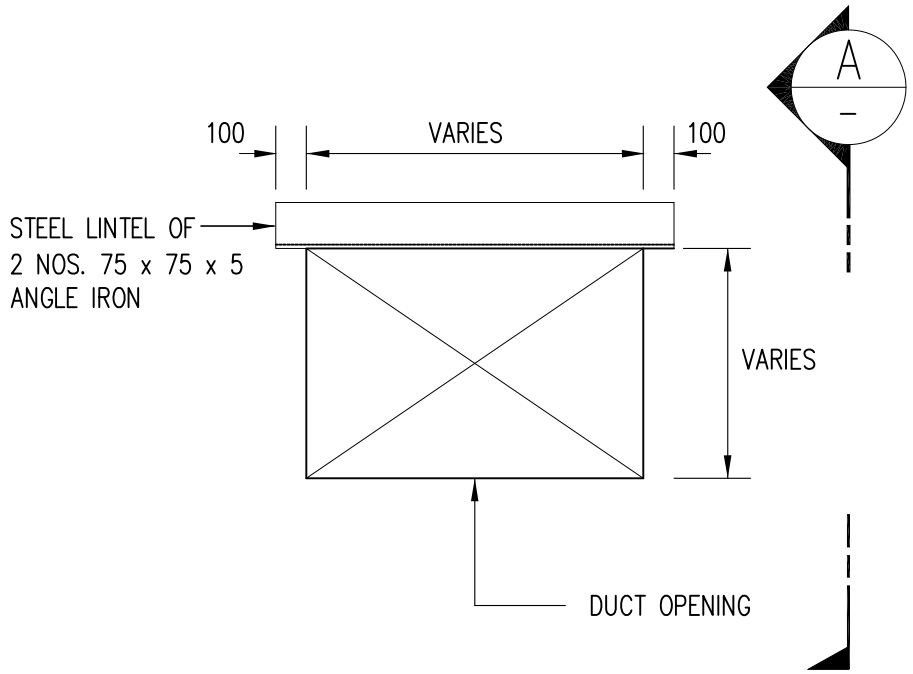

ELEVATION

STANDARD DETAIL OF DUCT FIRE BARRIER THROUGH FLOOR SLAB & FIRE COMPARTMENT WALL

NOTE:

JASA KEPADA RAKYAT

CAWANGAN KEJURUTERAAN MEKANIKAL
Ibu Pejabat JKR Malaysia

AIR CONDITIONING SYSTEM

DUCT PENETRATION DETAIL

DATE	SCALE
2017	N.T.S

DRAWING NUMBER
CKM/STD/AC/DUCT/REV2017/25

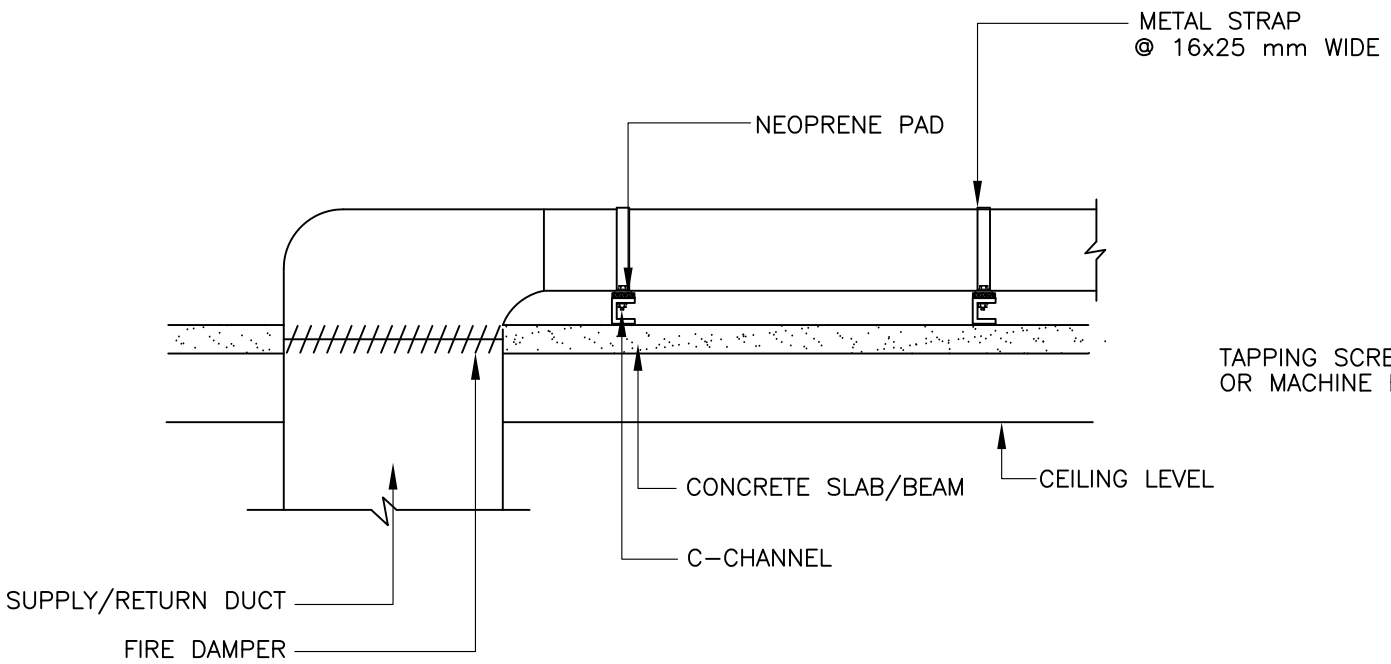

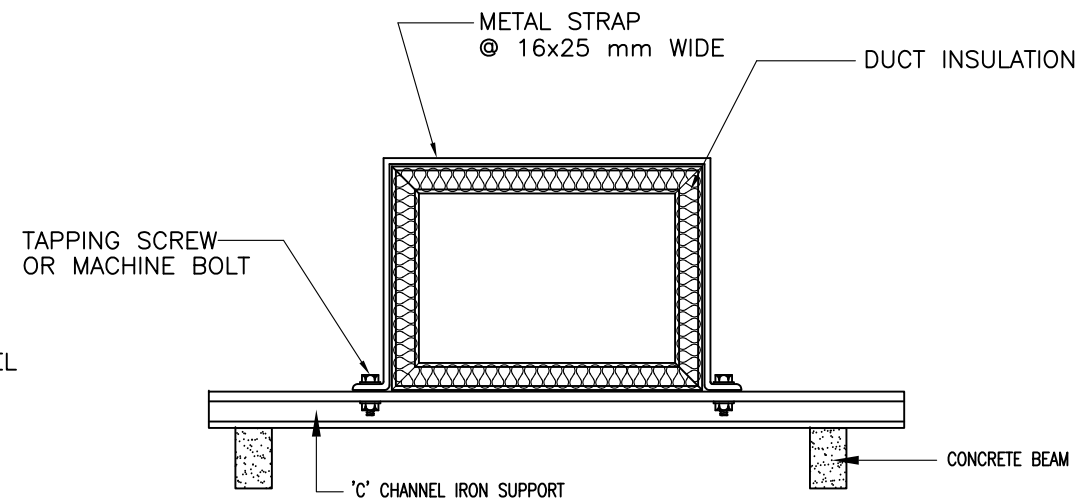

NOTE:
POSITION OF 'C' CHANNELS TO SUPPORT THE DUCTS
SHALL BE DETERMINED AT SITE

DUCT SUPPORT AND BRACKET DETAIL

NOTE:

JASA KEPADA RAKYAT

CAWANGAN KEJURUTERAAN MEKANIKAL
Ibu Pejabat JKR Malaysia

AIR CONDITIONING SYSTEM

DUCT SUPPORT AND BRACKET DETAIL

DATE	SCALE
2017	N.T.S

DRAWING NUMBER
CKM/STD/AC/DUCT/REV2017/26

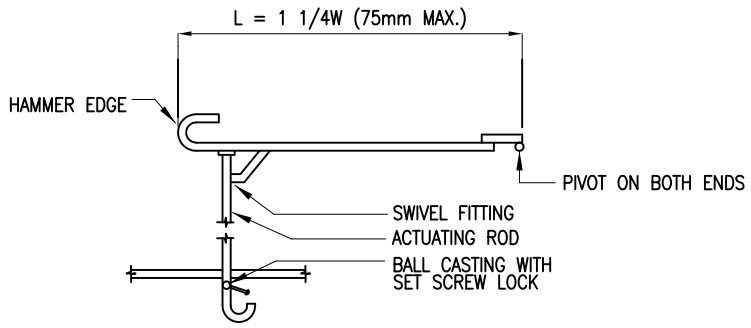

TYPE A

SPLITTER DAMPERS

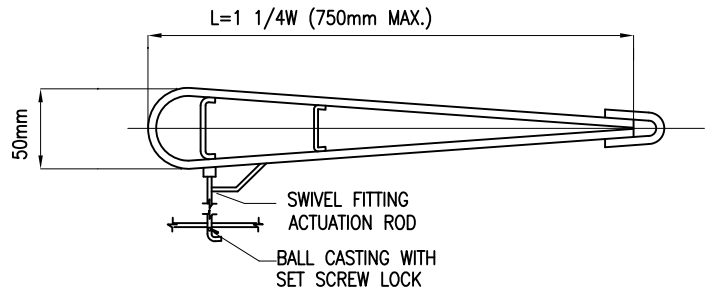

TYPE B

SPLITTER DAMPERS

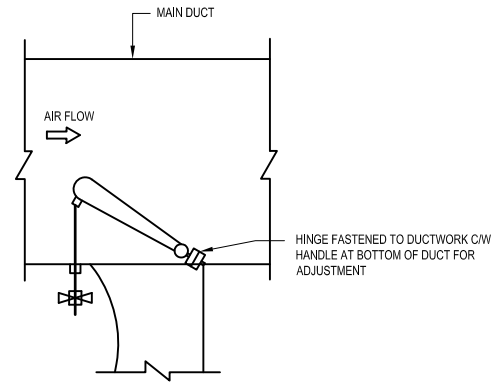

INSTALLATION OF SPLITTER DAMPER

SCHEDULE OF SPLITTER DAMPER

DUCT WIDTH (W)	DUCT HEIGHT 0 – 600 MM					DUCT HEIGHT 601 – 1500 MM					DUCT HEIGHT ABOVE 1500 MM				
	SPLITTER TYPE	SIZE OF HINGE	NO. OF HINGES	SIZE OF ADJUST ROD	NO. OF RODS	SPLITTER TYPE	SIZE OF HINGES	NO. OF HINGES	SIZE OF ADJUST ROD	NO. OF RODS	SPLITTER TYPE	SIZE OF HINGES	NO. OF HINGES	SIZE OF ADJUST ROD	NO. OF RODS
SPLITTER DAMPERS FOR BRANCH TAKE OFFS															
UP TO 400 MM	TYPE A	50 MM HINGE	2	5 MM	1	TYPE B	HINGE ROD 5 MMO	CONT.	5 MM	2	TYPE B	HINGE ROD 5 MM	CONT.	8 MMO	3
451 MM TO 700 MM	TYPE B	HINGE ROD 15 MM	CONT.	5 MM	1	TYPE A	HINGE ROD 20 MMO	CONT.	5 MM	2	TYPE B	HINGE ROD 20 MM	CONT.	8 MMO	3
SPLITTER DAMPERS FOR TEES AND SIMILAR															
UP TO 450 MM	TYPE A	50 MM HINGE	2	5 MM	1	TYPE B	HINGE ROD 15 MMO	CONT.	5 MMO	2	TYPE B	HINGE ROD 20 MMO	CONT.	8 MMO	3
451 MM TO 700 MM	TYPE B	HINGE ROD 15 MMO	CONT.	5 MM	1	TYPE A	HINGE ROD 20 MMO	CONT.	5 MMO	2	TYPE B	HINGE ROD 25 MMO	CONT.	8 MMO	3

SPLITTER DAMPER DETAIL

NOTE:

JASA KEPADA RAKYAT

CAWANGAN KEJURUTERAAN MEKANIKAL
Ibu Pejabat JKR Malaysia

AIR CONDITIONING SYSTEM

SPLITTER DAMPER DETAIL

DATE	SCALE
2017	N.T.S

DRAWING NUMBER

CKM/STD/AC/DUCT/REV2017/27

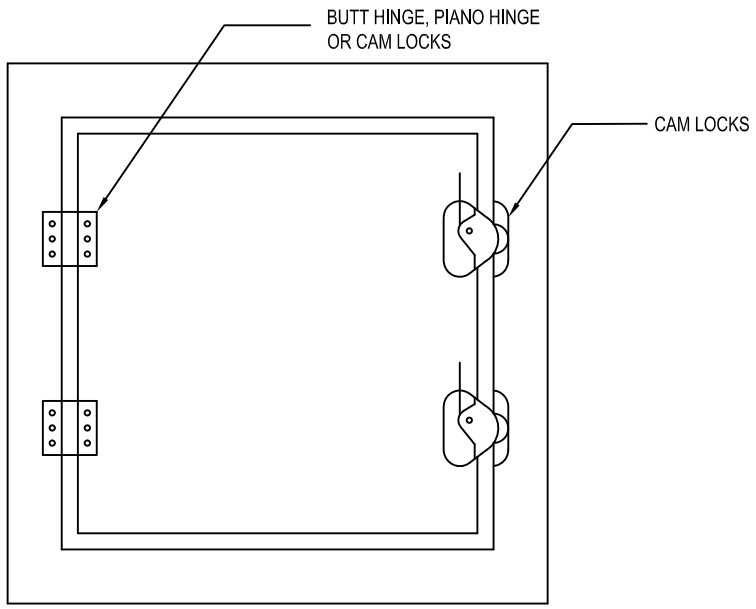

ACCESS DOOR

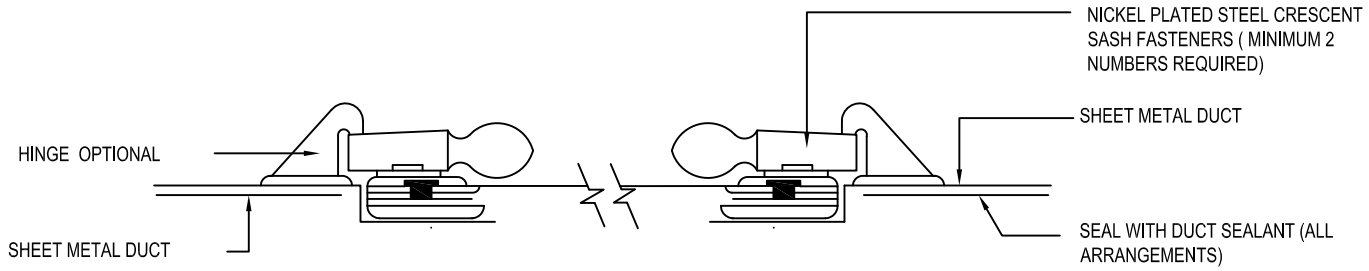

STANDARD DUCTWORK

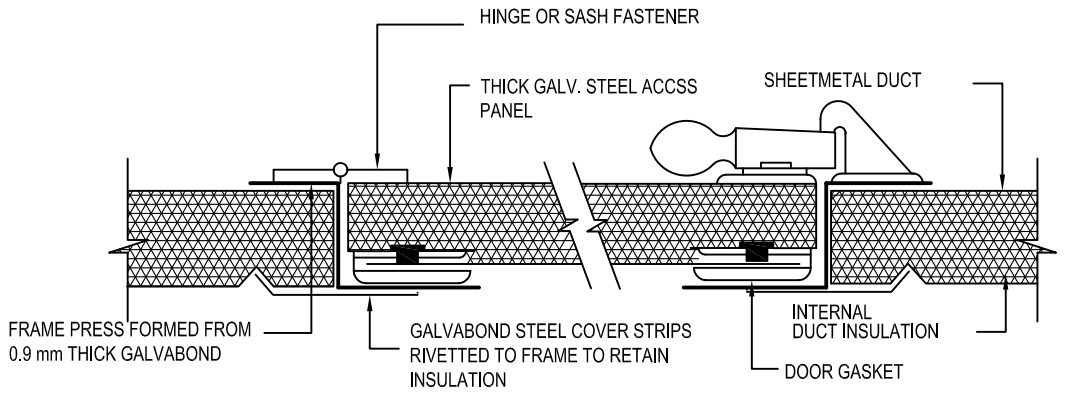

INTERNALLY INSULATED DUCTWORK

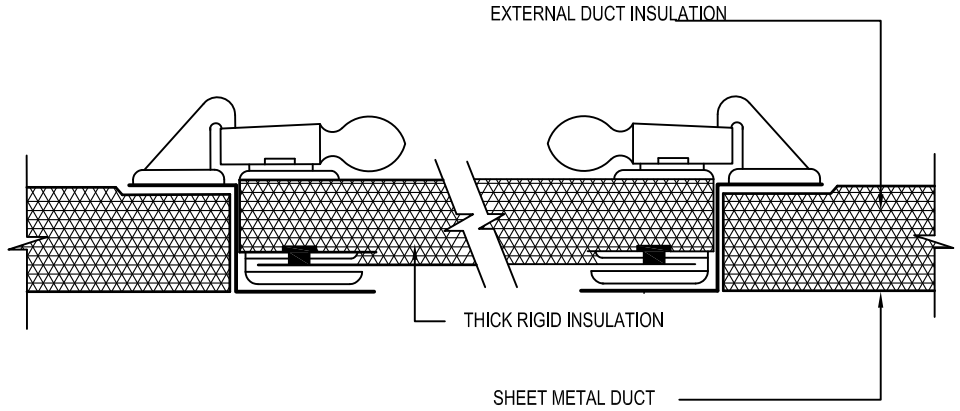

EXTERNALLY INSULATED DUCTWORK

NOTES: 1) ACCESS OPENING SIZE SHALL BE MINIMUM OF 600 mm X 450 mm

2) FOR SMALLER DUCT WIDTH,DIMENSION MAY BE TO REDUCE
THE WIDTH OR DEPTH OF DUCT

DUCTWORK ACCESS PANELS

NOTE:

JKR MEKANIKAL

JASA KEPADA RAKYAT

CAWANGAN KEJURUTERAAN MEKANIKAL
Ibu Pejabat JKR Malaysia

AIR CONDITIONING SYSTEM

DUCTWORK ACCESS PANELS

DATE	SCALE
2017	N.T.S

DRAWING NUMBER

CKM/STD/AC/DUCT/REV2017/28

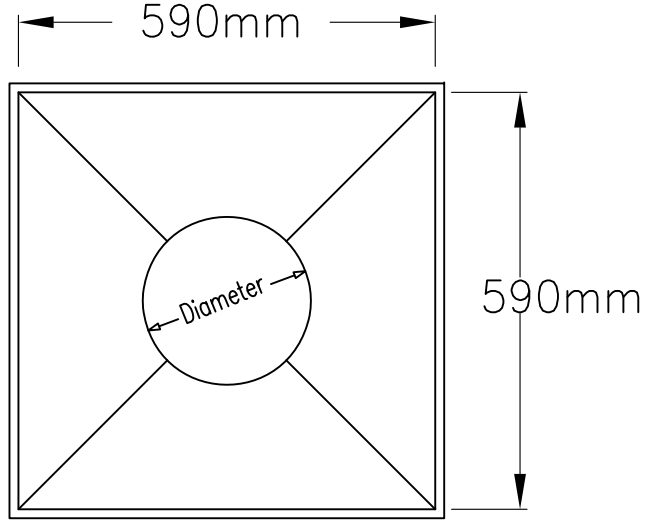

TOP VIEW

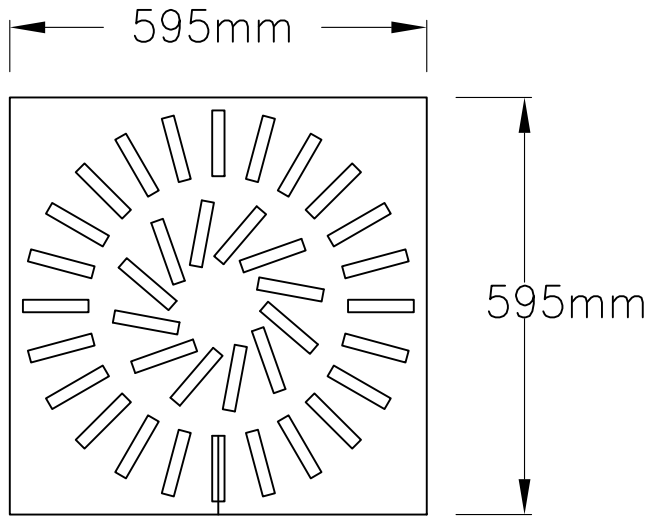

BOTTOM VIEW

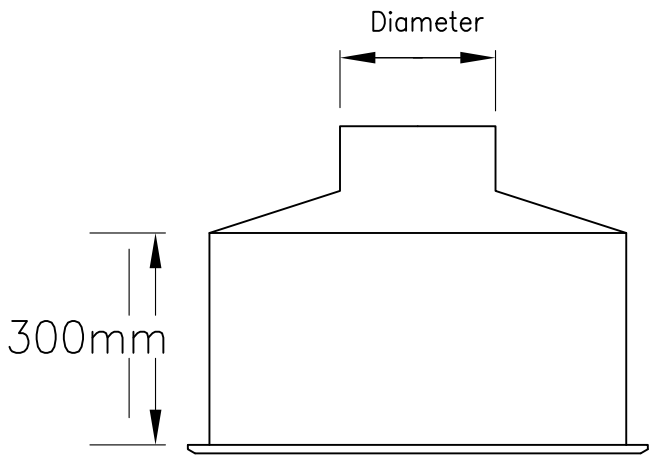

SIDE VIEW

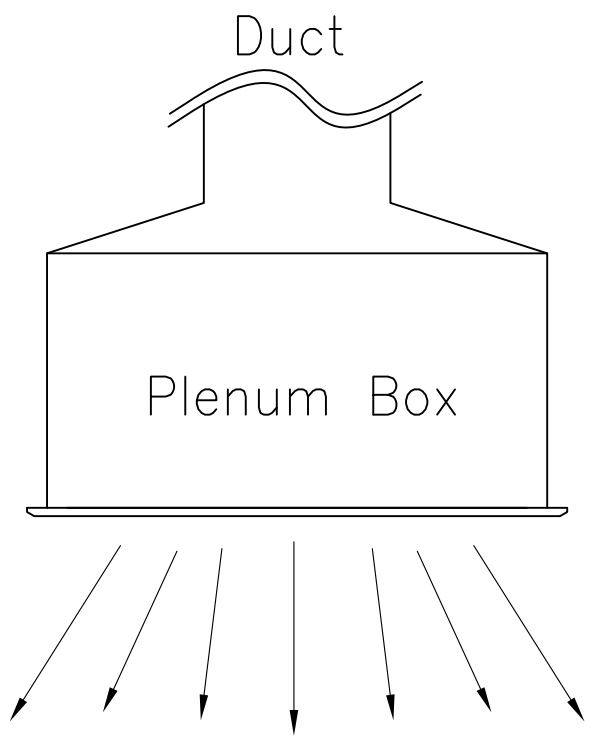

SQUARE SWIRL DIFFUSER DETAIL

NOTE:

JKR MEKANIKAL

JASA KEPADA RAKYAT

CAWANGAN KEJURUTERAAN MEKANIKAL
Ibu Pejabat JKR Malaysia

AIR CONDITIONING SYSTEM

SQUARE SWIRL DIFFUSER DETAIL

DATE	SCALE
2017	N.T.S

DRAWING NUMBER

CKM/STD/AC/DUCT/REV2017/29

SCHEDULE OF APPROVED DUCT ELEMENTS

DUCT WIDTH	ELBOWS		TEES		TAKE – OFFS	
	APPROVED TYPES	REF. FIG.NO.	APPROVED TYPES	REF. FIG.NO.	APPROVED TYPES	REF. FIG.NO.
UP TO 180mm	UNVANE ELBOWS (R1 < 3/4 W)	2	CORNER RADIUS Ri < 3/4 W (UNVANED)	5	CORNER RADIUS Ri < (3/4 W (UNVANED)	6
					RADIUSED CORNER	6
181mm TO 400mm	UNVANE ELBOWS (R1 < 3/4 W)	2	CORNER RADIUS Ri (< 3/4 W (UNVANED)	5	RADIUSED CORNER	8
	SINGLE VANED ELBOWS (Ri < 1/2W)	3	CORNER RADIUS Ri (< 1/2 W (SINGLE VANED)	5	CORNER RADIUS Ri < (1/2 W (UN VANED)	6
	SQUARE ELBOWS WITH TYPE 'B' VANES	1	SQUARE CORNER WITH TYPE 'B' VANES	4	CORNER RADIUS Ri < 1/2 W (SINGLE VANED)	6
					SQUARE CORNER WITH TYPE 'B' VANES	7
401mm TO 600mm	UNVANE ELBOWS (R1 < 3/4 W)	2	CORNER RADIUS Ri (< 3/4 W (UNVANED)	5	RADIUSED CORNER	8
	SINGLE VANED ELBOWS (Ri < 1/2W)	3	CORNER RADIUS Ri (< 1/2 W (SINGLE VANED)	5	CORNER RADIUS Ri < (3/4 W (UNVANED)	6
	SQUARE ELBOWS WITH TYPE 'B' VANES	1	SQUARE CORNER WITH TYPE 'B' VANES	4	CORNER RADIUS Ri < (1/2 W (SINGLE VANED)	6
					SQUARE CORNER WITH TYPE 'B' VANES	6
ABOVE 600mm	DOUBLE VANED ELBOWS (Ri < 1/4W)	3	CORNER RADIUS Ri < 1/4W (DOUBLE VANED)	5	CORNER RADIUS Ri < (1/4 W (SINGLE VANED)	8
	SQUARE ELBOWS WITH TYPE 'A' VANES	1	SQUARE CORNER WITH TYPE 'A' VANES	4	SQUARE CORNER WITH TYPE 'A' VANES	7

NOTES :

1. THE TYPE DUCT ELEMENT TO BE PROVIDED SHALL BE IN ACCORDANCE WITH THE ABOVE UNLESS OTHERWISE APPROVED OR DIRECTED.
2. WHERE ALTERNATIVE ARE SCHEDULE EQUAL CONSIDERATIONS WILL BE TO ALL TYPE.

DUCT CONSTRUCTION DETAIL

NOTE:

JKR MEKANIKAL

JASA KEPADA RAKYAT

CAWANGAN KEJURUTERAAN MEKANIKAL
Ibu Pejabat JKR Malaysia

AIR CONDITIONING SYSTEM

DUCT CONSTRUCTION DETAIL

DATE	SCALE
2017	N.T.S

DRAWING NUMBER

CKM/STD/AC/DUCT/REV2017/03

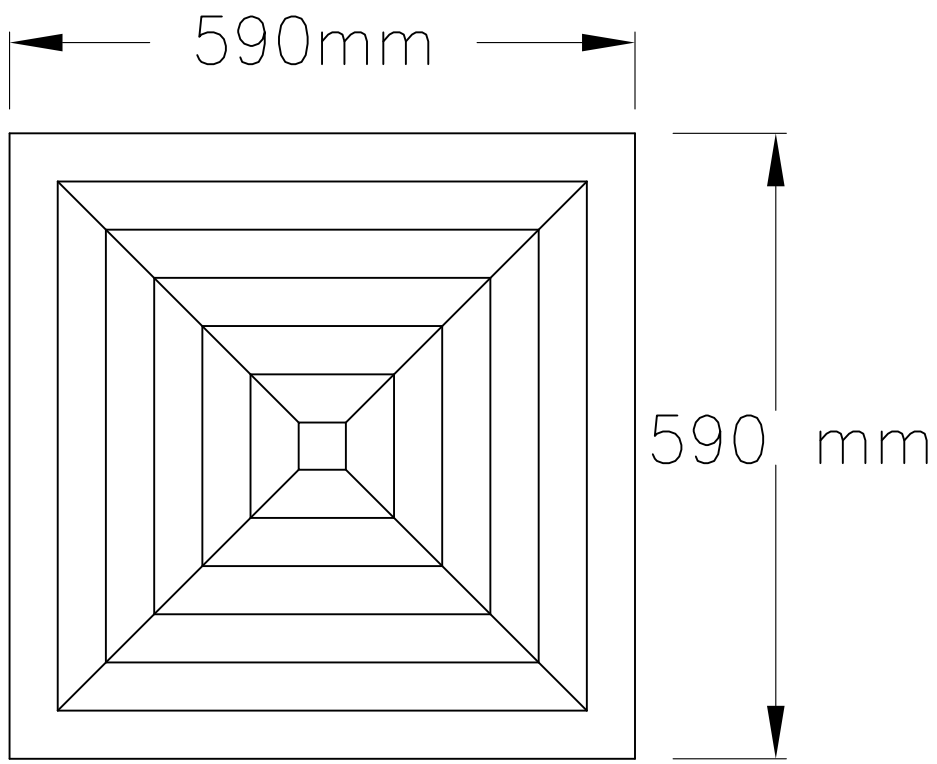

TOP VIEW

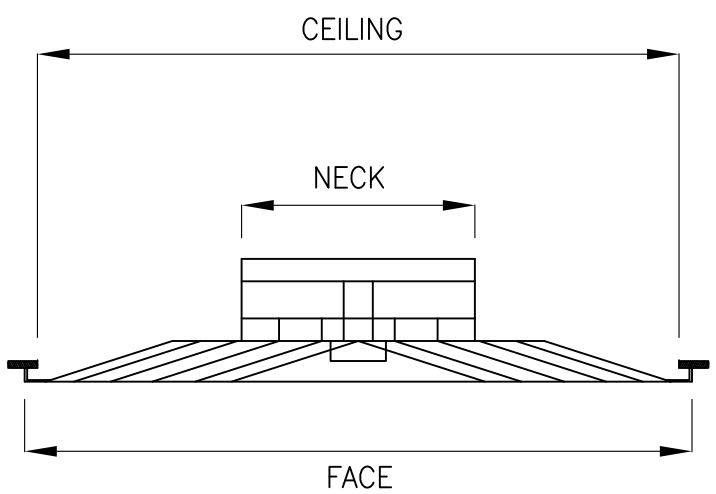

SIDE VIEW

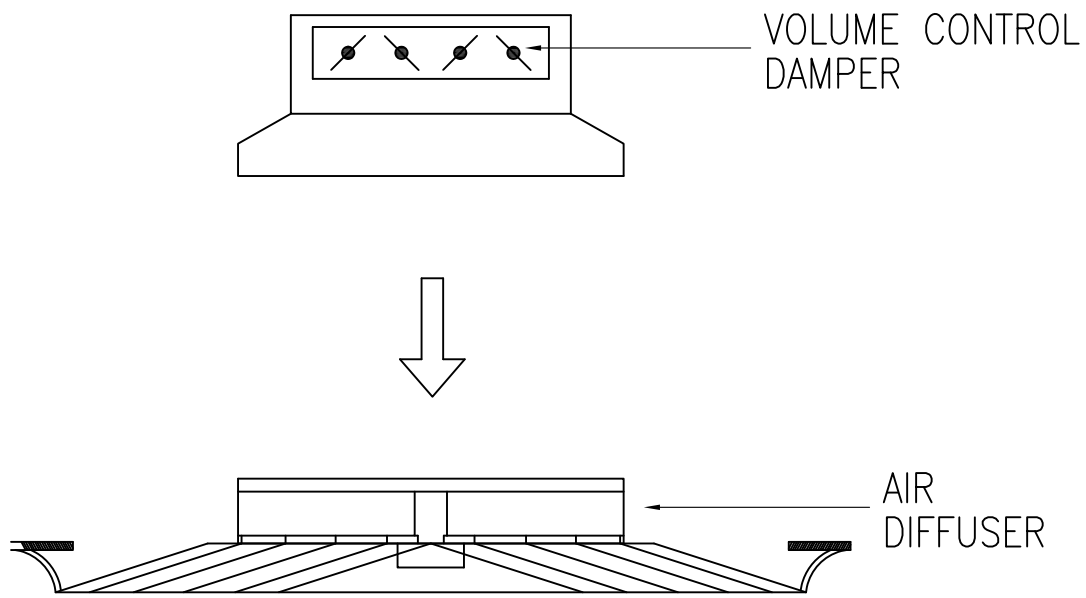

EXPLODED VIEW

SQUARE DIFFUSER DETAIL

NOTE:

JKR MEKANIKAL

JASA KEPADA RAKYAT

CAWANGAN KEJURUTERAAN MEKANIKAL
Ibu Pejabat JKR Malaysia

AIR CONDITIONING SYSTEM

SQUARE DIFFUSER DETAIL

DATE	SCALE
2017	N.T.S

DRAWING NUMBER

CKM/STD/AC/DUCT/REV2017/30

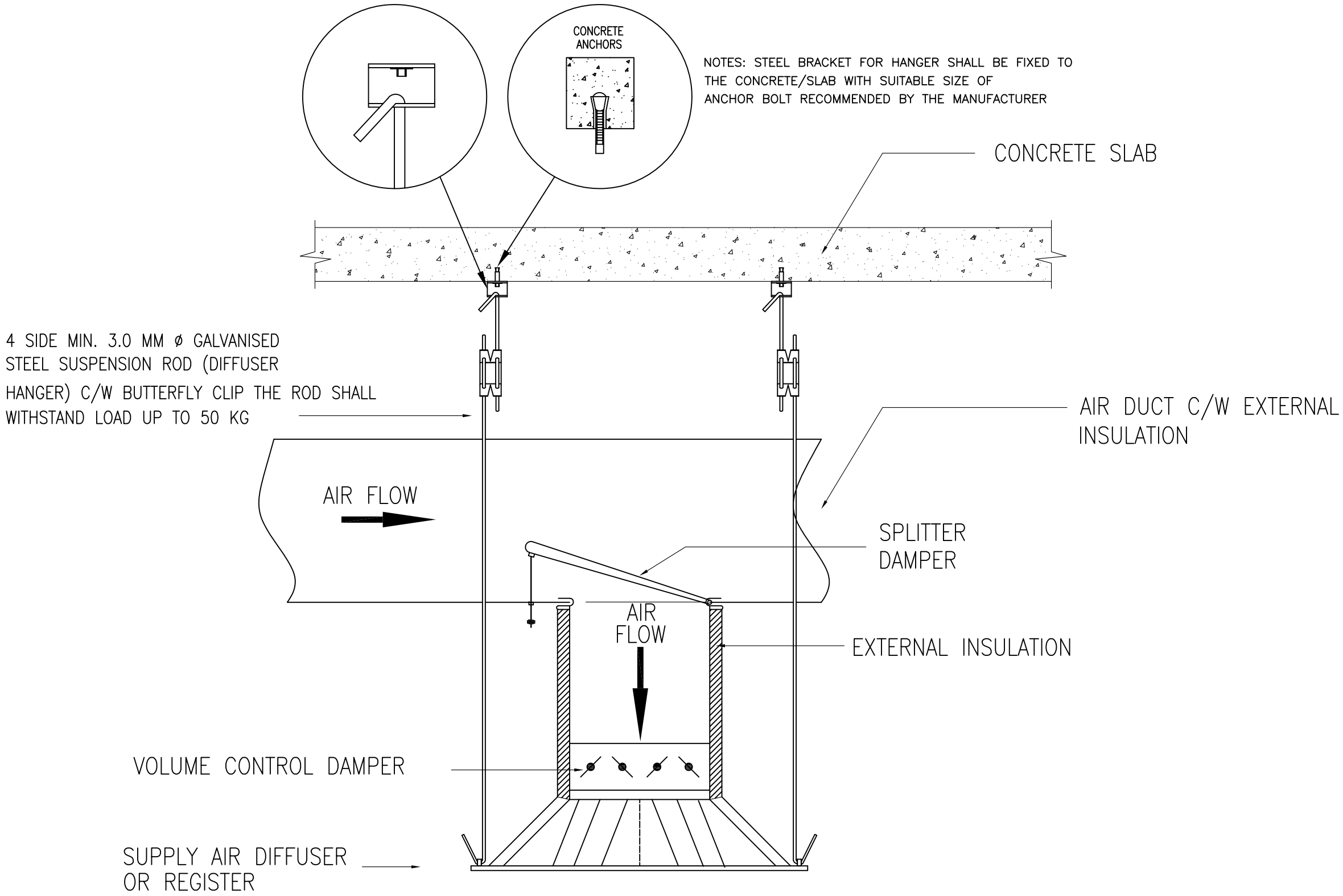

TYPICAL DETAIL OF SQUARE DIFFUSER CONNECTION

NOTE:

JKR MEKANIKAL

JASA KEPADA RAKYAT

CAWANGAN KEJURUTERAAN MEKANIKAL
Ibu Pejabat JKR Malaysia

AIR CONDITIONING SYSTEM

TYPICAL DETAIL OF SQUARE DIFFUSER CONNECTION

DATE	SCALE
2017	N.T.S

DRAWING NUMBER

CKM/STD/AC/DUCT/REV2017/31

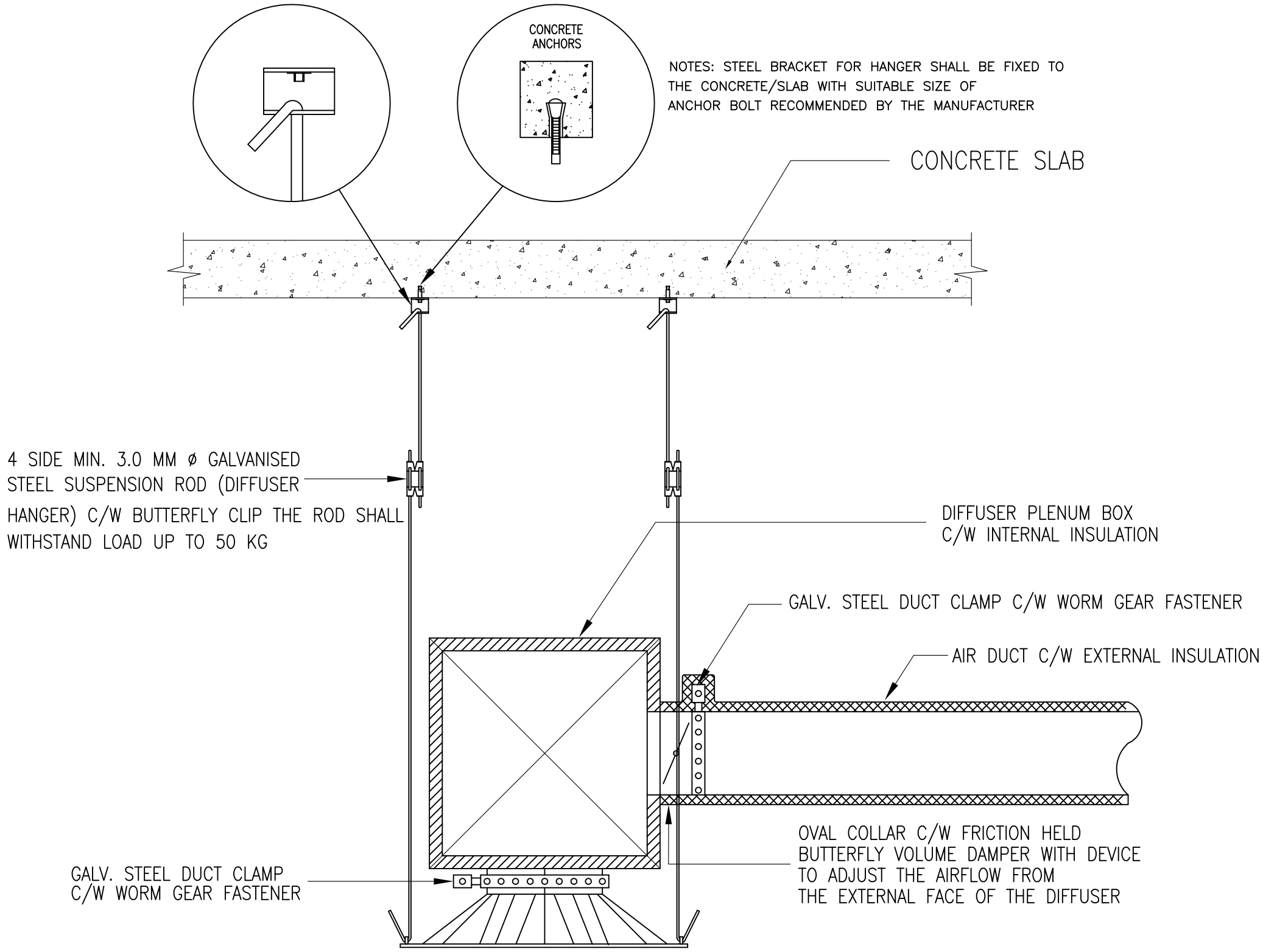

TYPICAL DETAIL OF SQUARE DIFFUSER CONNECTION WITH PLENNUM BOX

NOTE:

JKR MEKANIKAL

JASA KEPADA RAKYAT

CAWANGAN KEJURUTERAAN MEKANIKAL
Ibu Pejabat JKR Malaysia

AIR CONDITIONING SYSTEM

TYPICAL DETAIL OF SQUARE DIFFUSER CONNECTION WITH PLENNUM BOX

DATE	SCALE
2017	N.T.S

DRAWING NUMBER

CKM/STD/AC/DUCT/REV2017/32

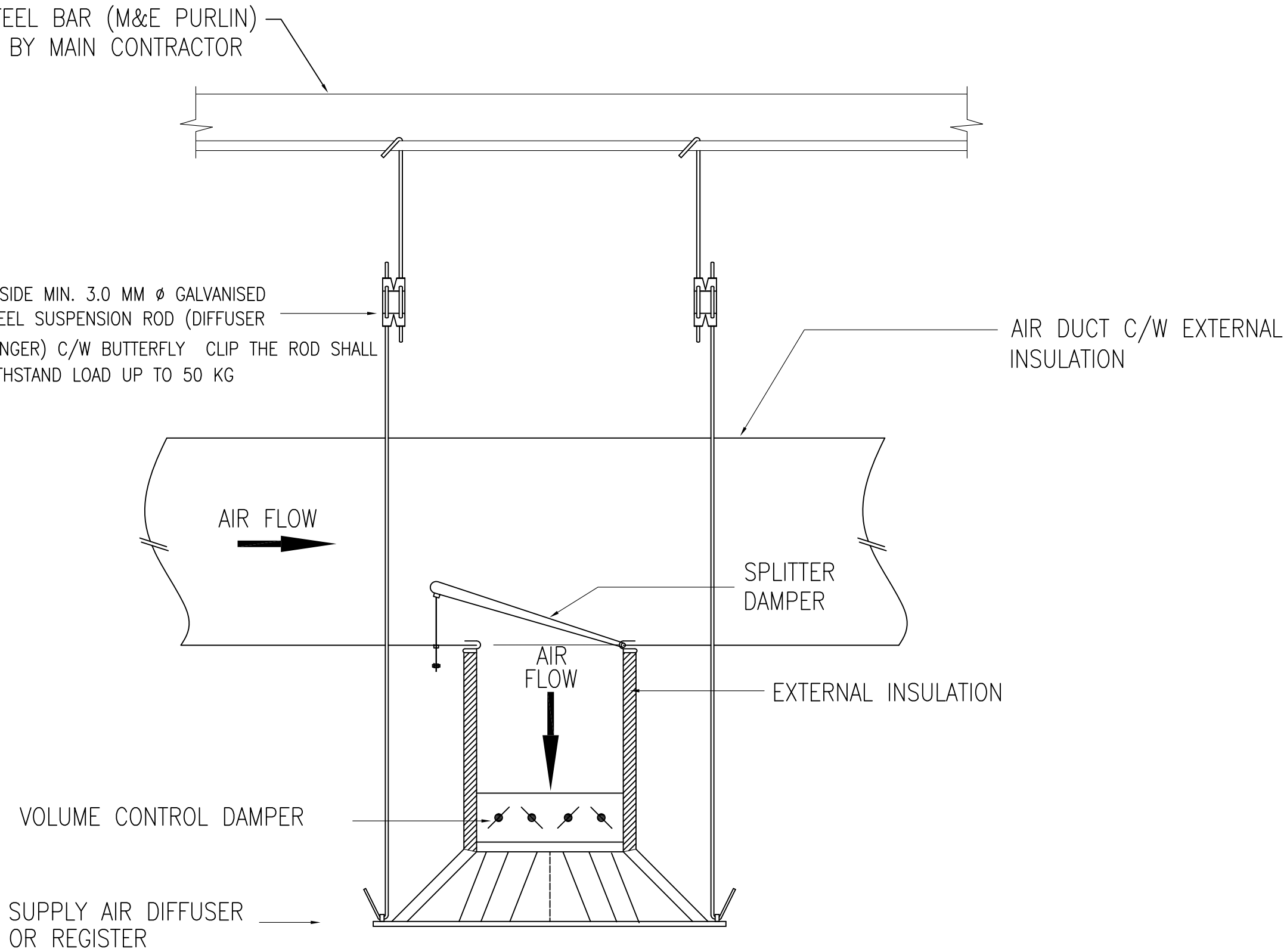

TYPICAL DETAIL OF SQUARE DIFFUSER CONNECTION (UNDER THE ROOF)

NOTE:

JKR MEKANIKAL

JASA KEPADA RAKYAT

CAWANGAN KEJURUTERAAN MEKANIKAL
Ibu Pejabat JKR Malaysia

AIR CONDITIONING SYSTEM

TYPICAL DETAIL OF SQUARE DIFFUSER CONNECTION

DATE	SCALE
2017	N.T.S

DRAWING NUMBER

CKM/STD/AC/DUCT/REV2017/33

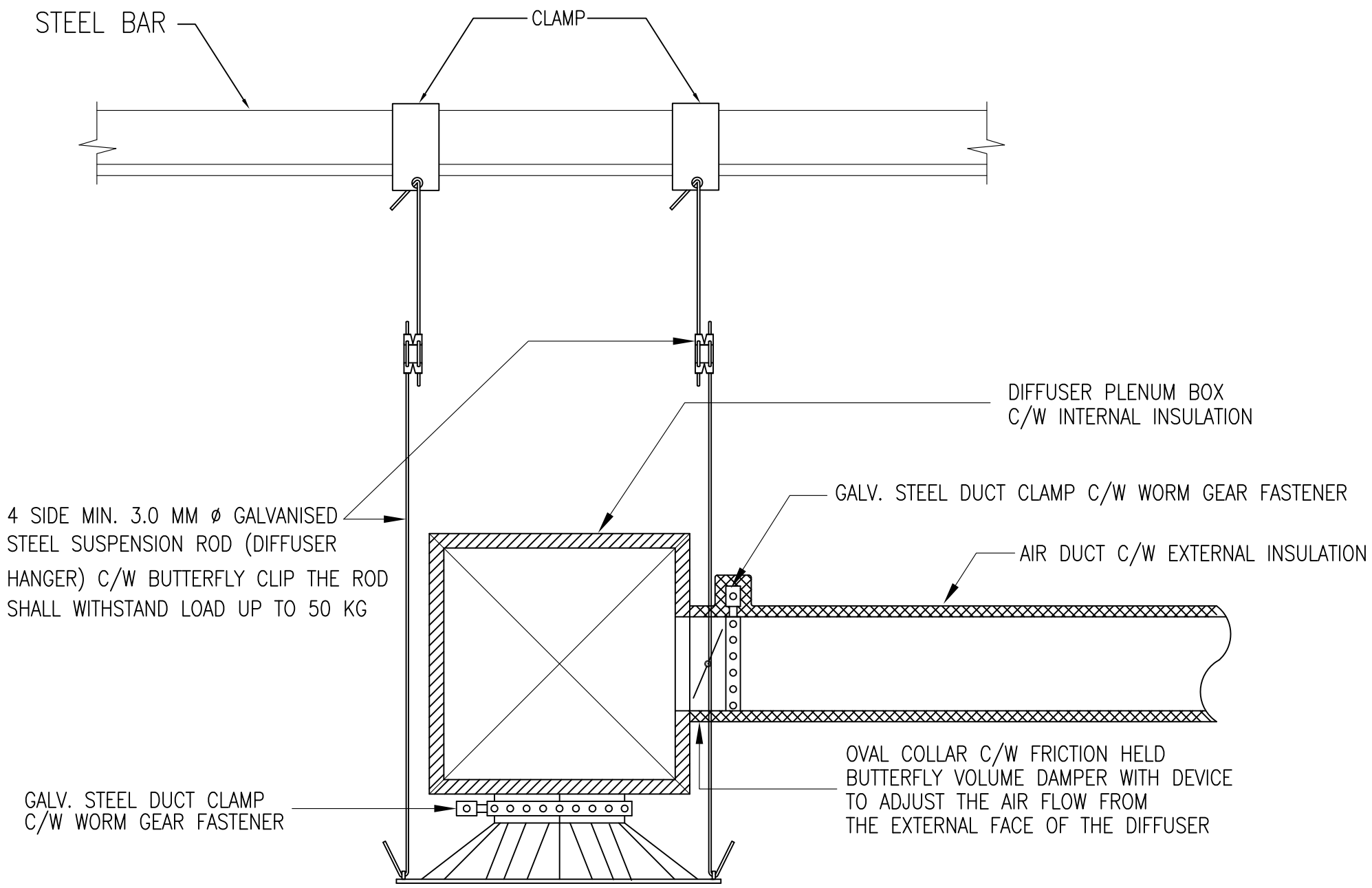

TYPICAL DETAIL OF SQUARE DIFFUSER CONNECTION WITH PLENNUM BOX (UNDER THE ROOF)

NOTE:

JKR MEKANIKAL

JASA KEPADA RAKYAT

CAWANGAN KEJURUTERAAN MEKANIKAL
Ibu Pejabat JKR Malaysia

AIR CONDITIONING SYSTEM

TYPICAL DETAIL OF SQUARE DIFFUSER CONNECTION WITH PLENNUM BOX

DATE	SCALE
2017	N.T.S

DRAWING NUMBER

CKM/STD/AC/DUCT/REV2017/34

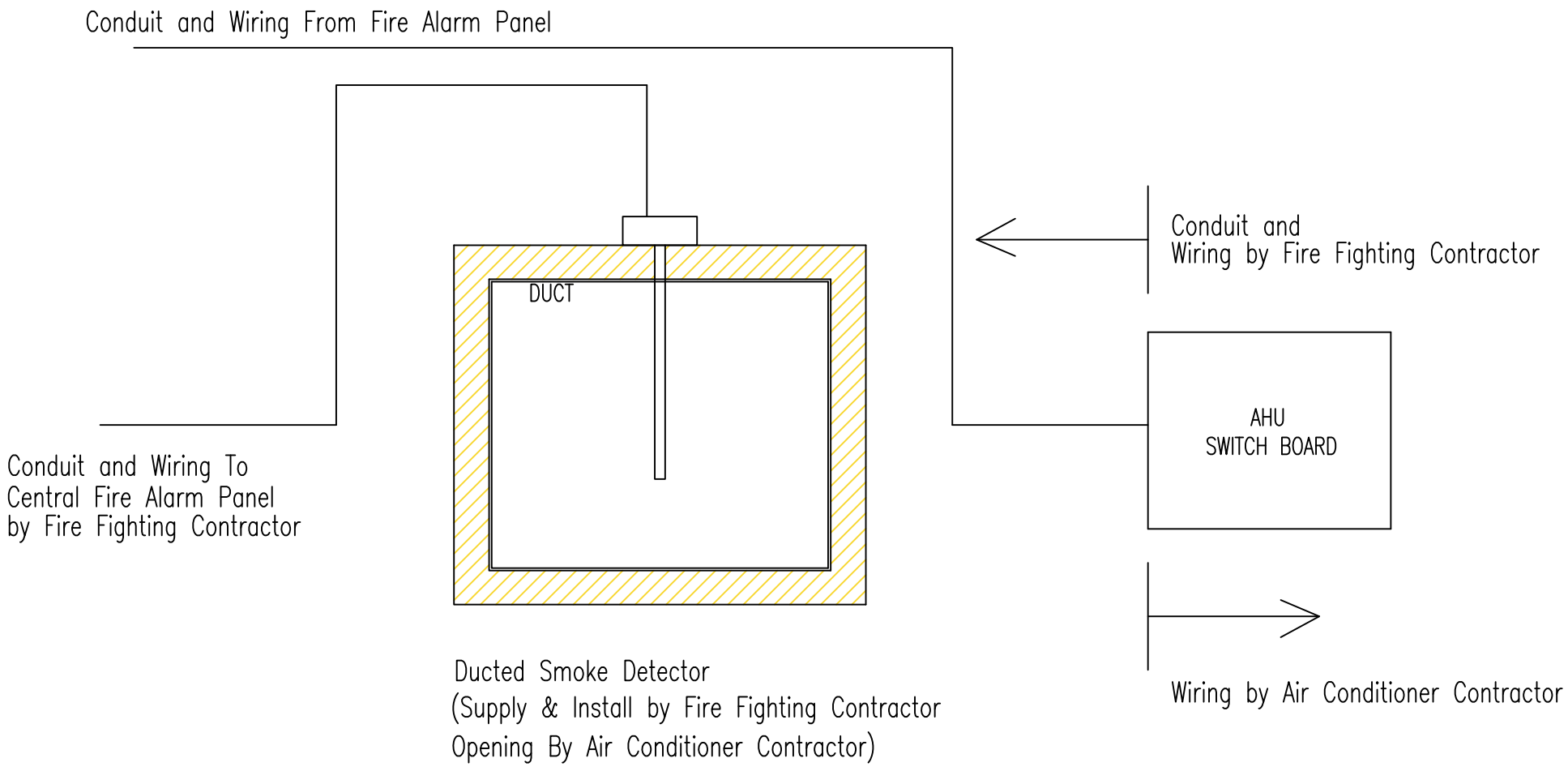

NOTES: DUCT SMOKE DETECTOR MOUNTING SHALL BE PROVIDED INSIDE THE RETURN DUCT ADJCENT TO DUCT ACCESS DOOR

INSTALLATION OF SMOKE DETECTOR INSIDE AIR CONDITIONER DUCTING

NOTE:

JKR MEKANIKAL

JASA KEPADA RAKYAT

CAWANGAN KEJURUTERAAN MEKANIKAL
Ibu Pejabat JKR Malaysia

AIR CONDITIONING SYSTEM

INSTALLATION OF SMOKE DETECTOR
INSIDE DUCTING

DATE	SCALE
2017	N.T.S

DRAWING NUMBER

CKM/STD/AC/DUCT/REV2017/35

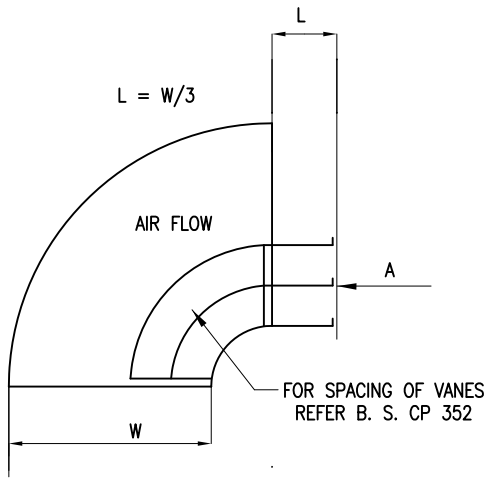

VANES FOR SHORT RADIUS ELBOWS

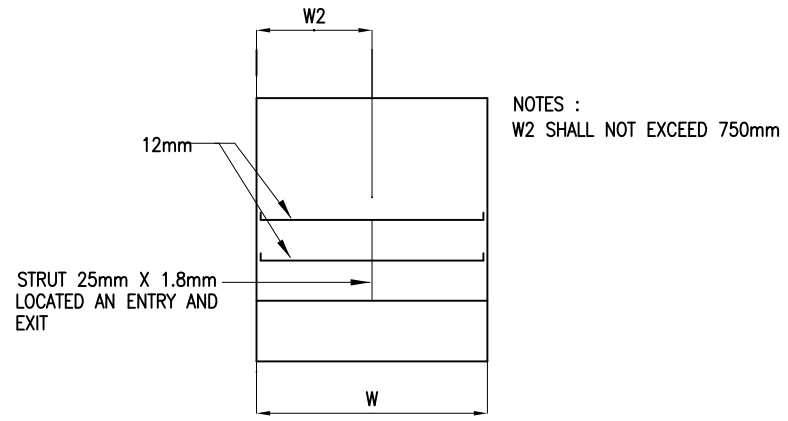

NOTES :
W2 SHALL NOT EXCEED 750mm

VIEW ON ARROWS 'A'

VANES FOR SHORT RADIUS ELBOWS

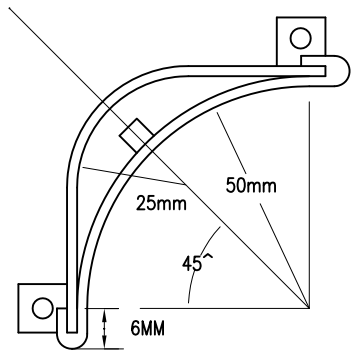

TYPE A

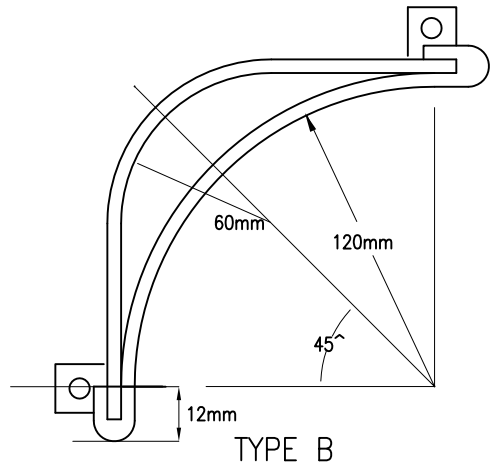

TYPE B

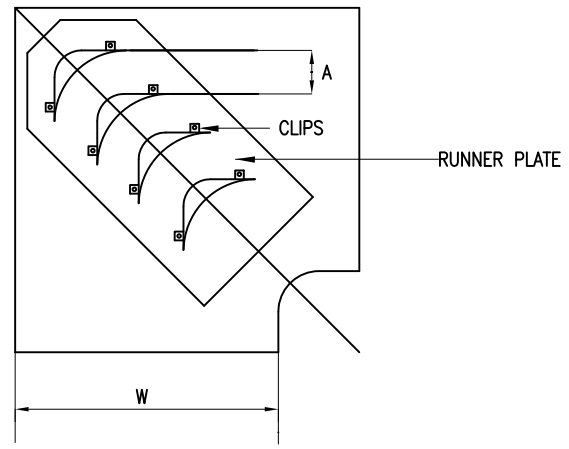

VANES FOR SQUARE ELBOWS (IF APPLICABLE)

SCHEDULES OF VANES

ELBOWS WIDTH 'W' (MM)	VANES TYPE	VANE CONSTRUCTION		RUNNER PLATE CONSTRUCTION		DISTANCE BETWEEN BLADES DIMENSION 'A'
		PLATE THICKNESS (MM)	MAX. DISTANCE BETWEEN RUNNER PLATES (MM)	PLATE THICKNESS (MM)	PLATE WIDTH (MM)	
600mm	TYPE B	0.6	600mm	0.6	115	28mm
ABOVE 600mm	TYPE A	0.8	900mm	0.8	200	56mm

VANES

NOTE:

JKR MEKANIKAL

JASA KEPADA RAKYAT

CAWANGAN KEJURUTERAAN MEKANIKAL
Ibu Pejabat JKR Malaysia

AIR CONDITIONING SYSTEM

VANES

DATE	SCALE
2017	N.T.S

DRAWING NUMBER
CKM/STD/AC/DUCT/REV2017/04

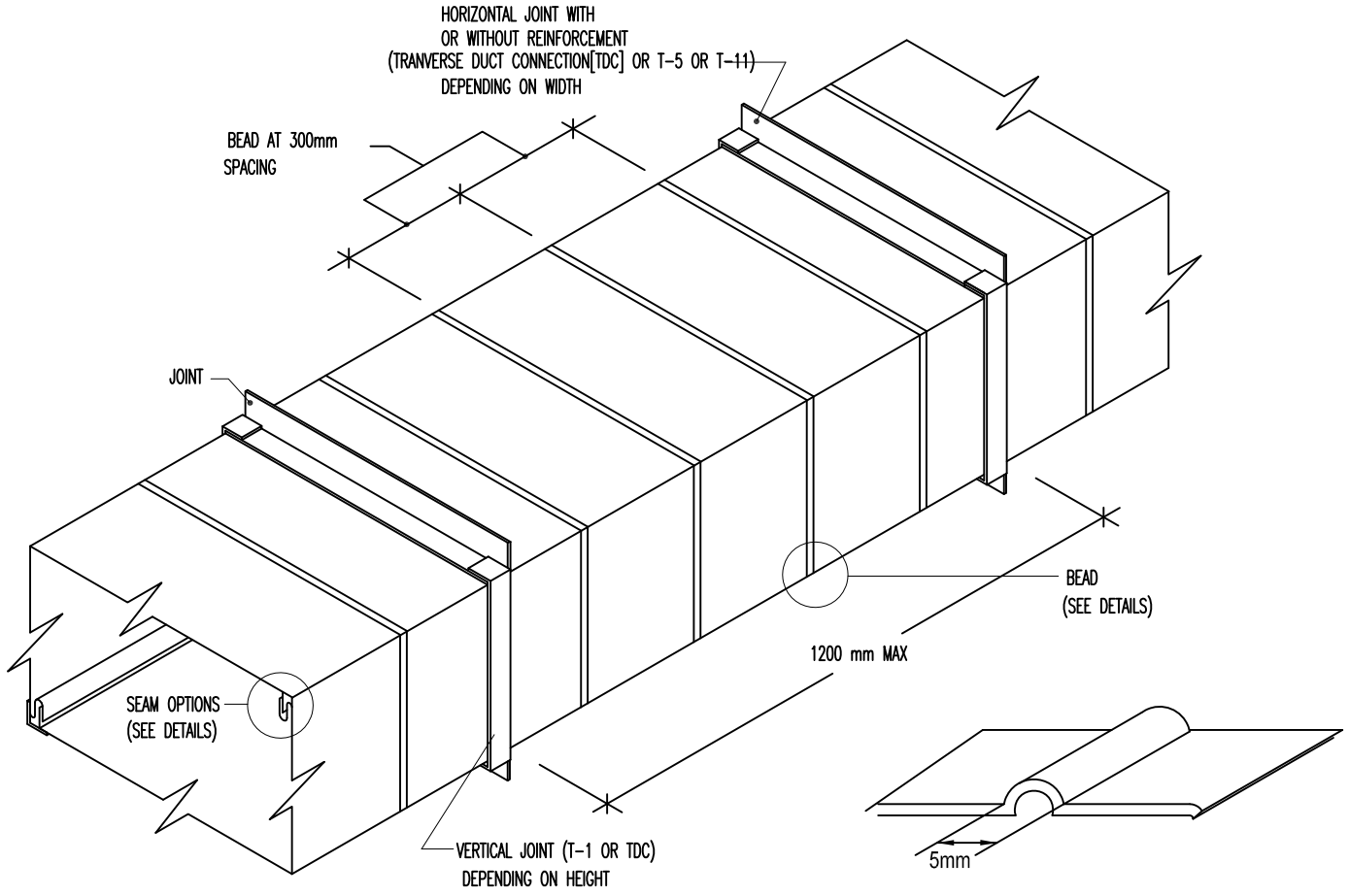

BEAD DETAILS

GENERAL LAYOUT OF DUCT CONSTRUCTION

(NOTES: SIZE OF DUCT SHALL REFER TO TECHNICAL SPECS)

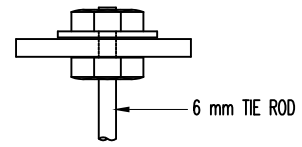

DETAIL `A'

TIE ROD WITH INTERNAL AND EXTERNAL NUTS

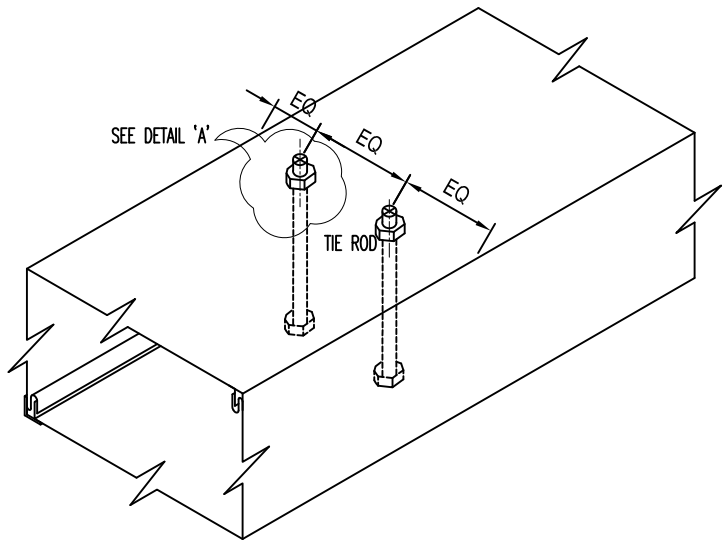

DETAIL FOR TIE ROD

(NOTES: SIZE OF DUCT SHALL REFER TO TECHNICAL SPECS)

NOTE:

JASA KEPADA RAKYAT

CAWANGAN KEJURUTERAAN MEKANIKAL
Ibu Pejabat JKR Malaysia

AIR CONDITIONING SYSTEM

GENERAL LAYOUT OF DUCT CONSTRUCTION

DATE	SCALE
2017	N.T.S

DRAWING NUMBER

CKM/STD/AC/DUCT/REV2017/05

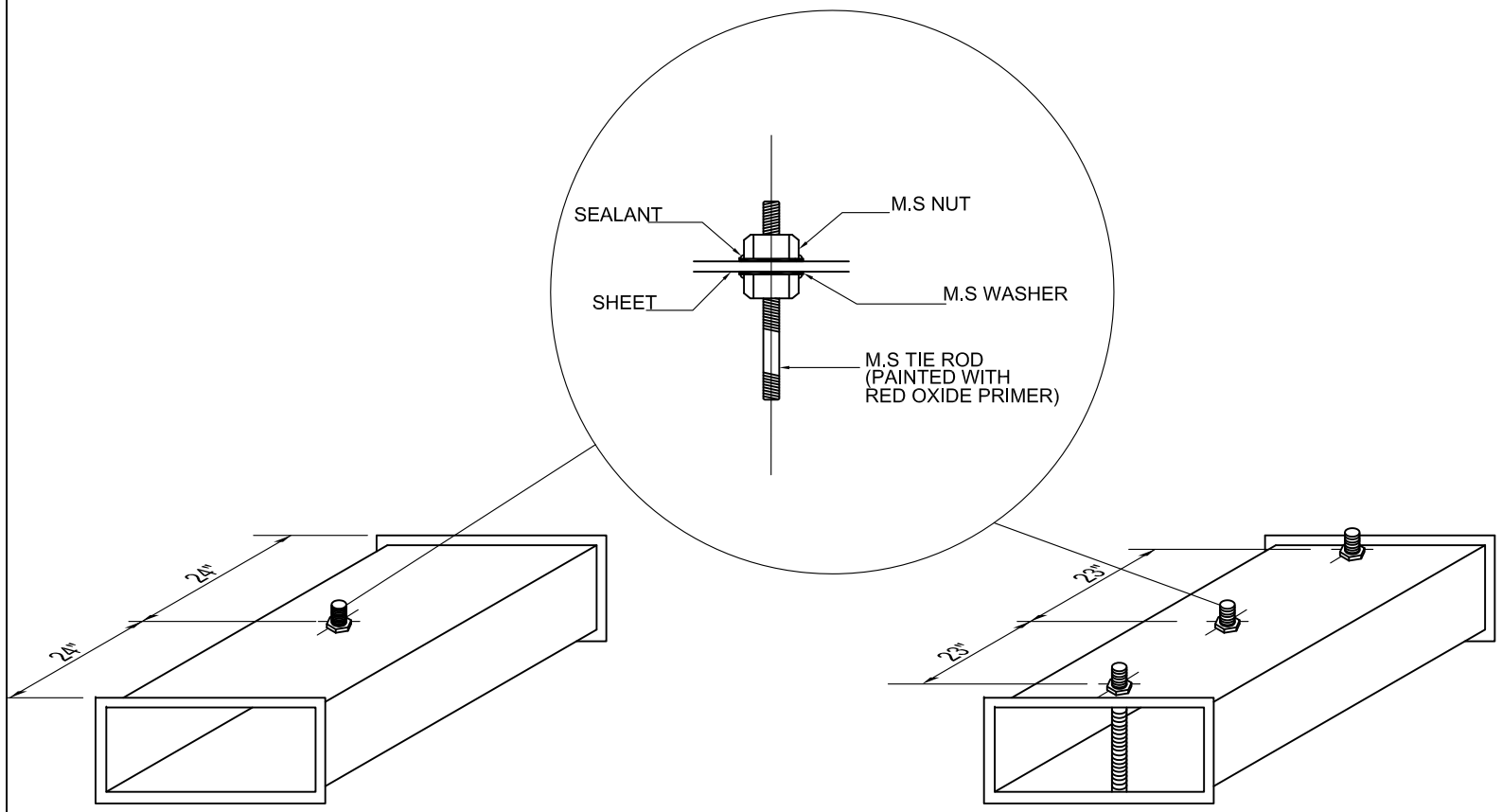

THE ROD CENTER (TRC) REQUIRES A TIE ROD
IN THE EXACT CENTER OF THE DUCT SECTION

TIE ROD CENTER/TIE ROD FLANGE (TRC/TRF)
THE TIE RODS AT THE FLANGES SHOULD BE LOCATED
1" FROM THE TDF FLANGES, WITH APPROPRIATE
SPACING ACROSS THE WIDTH OF THE DUCT.
THE ROD AT THE CENTER SHOULD BE LOCATED
AT THE CENTER OF THE DUCT IN LINE WITH THE
FLANGE TIE RODS.

TIE ROD REINFORCEMENT

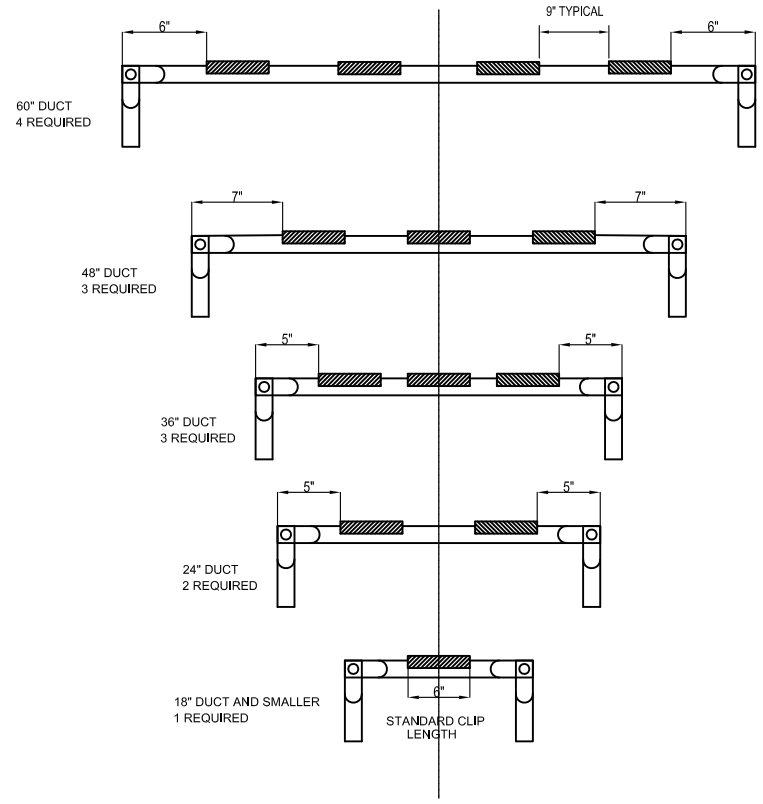

RECOMMENDED CLIP SPACING FOR TRANVERSE DUCT FLANGE CONNECTION

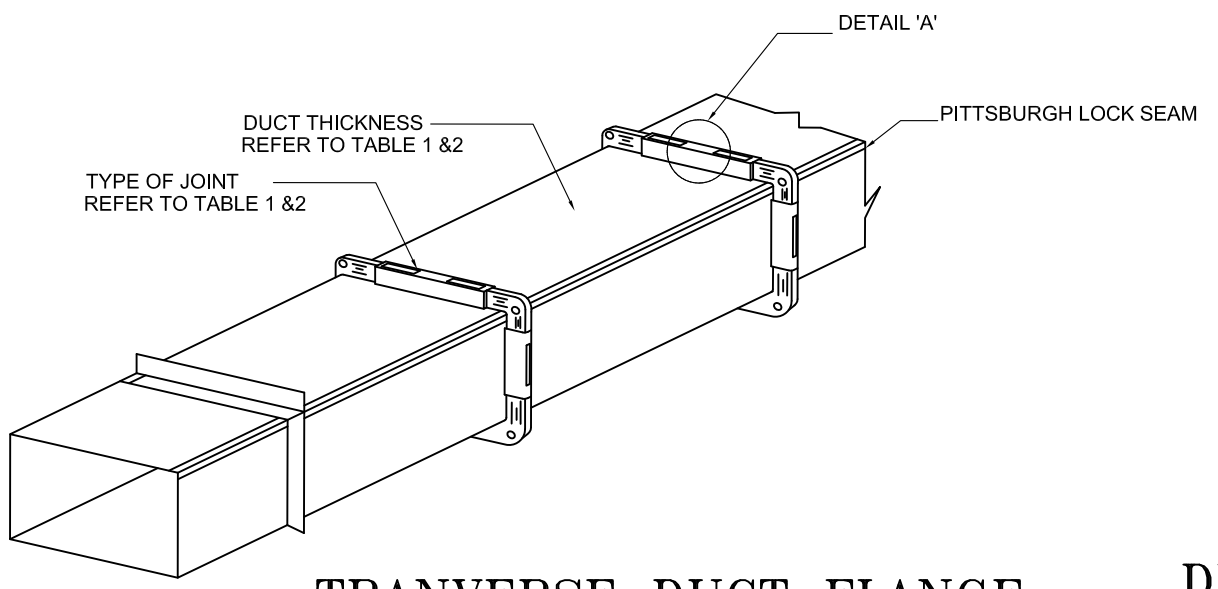

TRANVERSE DUCT FLANGE DUCT ISOMETRIC VIEW

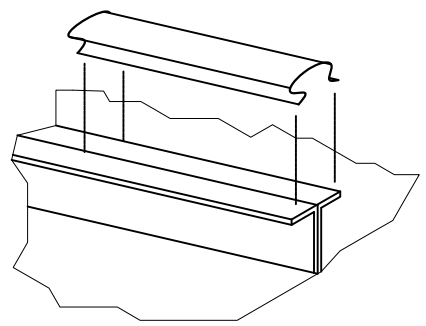

DETAIL 'A' TRANVERSE DUCT FLANGE CLIP

NOTE:

JASA KEPADA RAKYAT

CAWANGAN KEJURUTERAAN MEKANIKAL
Ibu Pejabat JKR Malaysia

AIR CONDITIONING SYSTEM

DUCT SUPPORT AND BRACKET DETAIL

DATE	SCALE
2017	N.T.S

DRAWING NUMBER
CKM/STD/AC/DUCT/REV2017/06

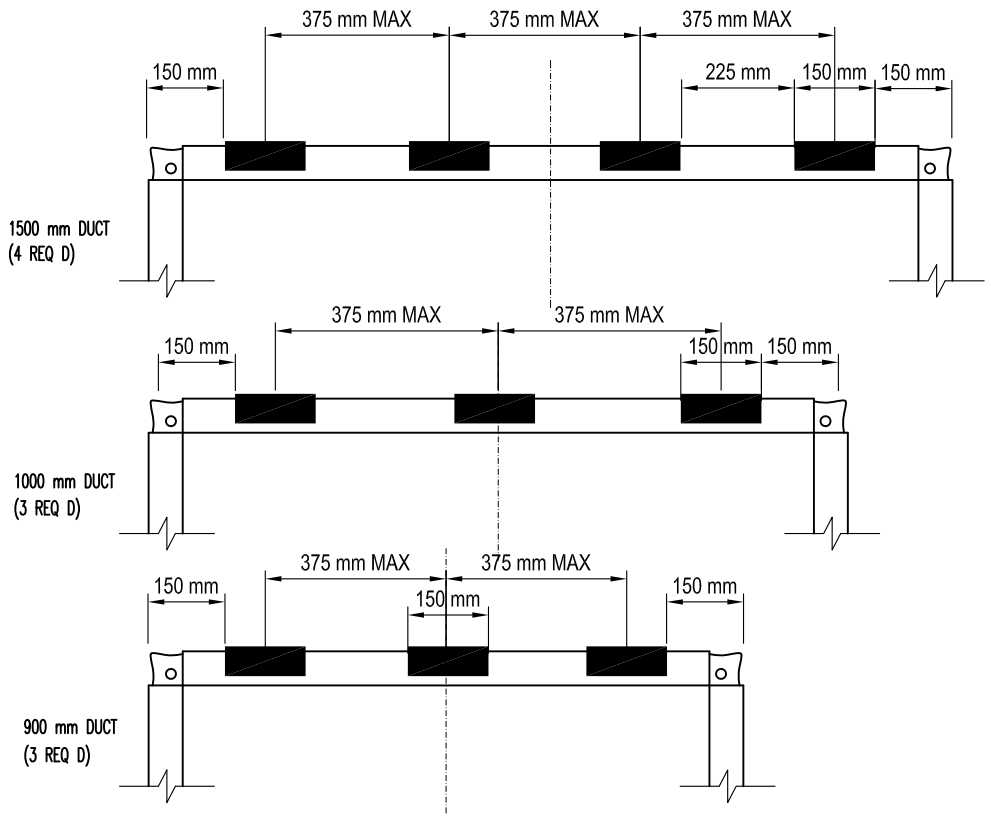

2(a)-CLIP SPACING

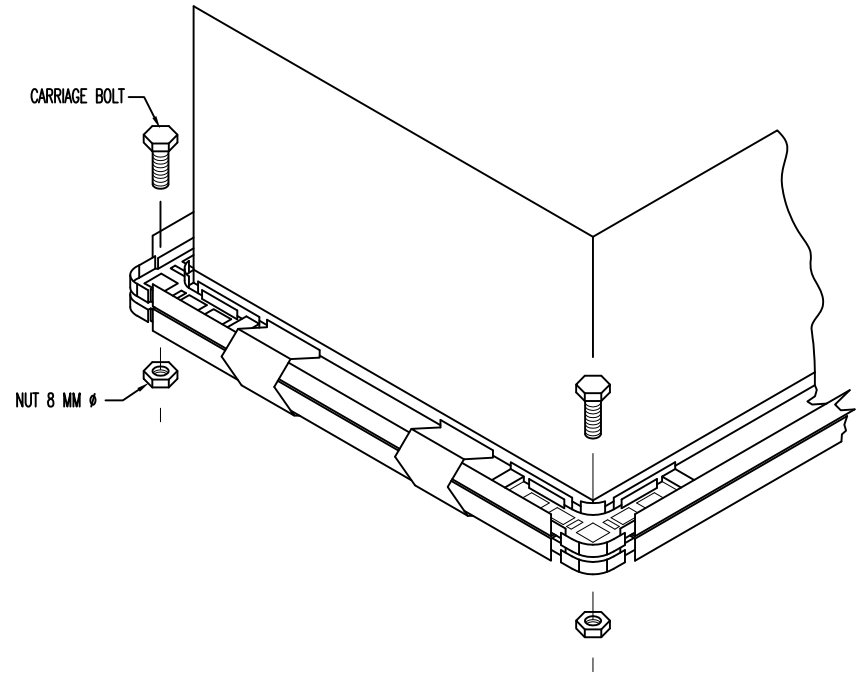

2(b)-REINFORCEMENT OPTION

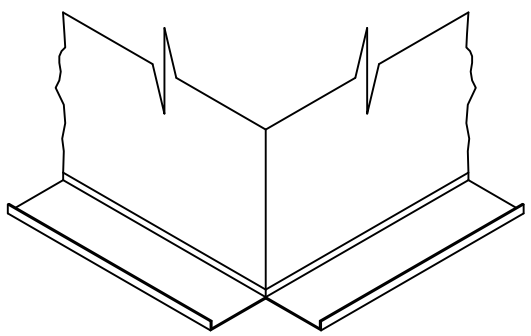

2(c)- T-24 FORMED FLANGE

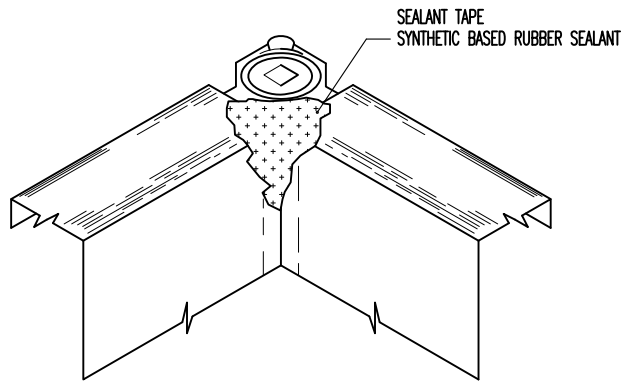

2(d)-INSIDE CORNER

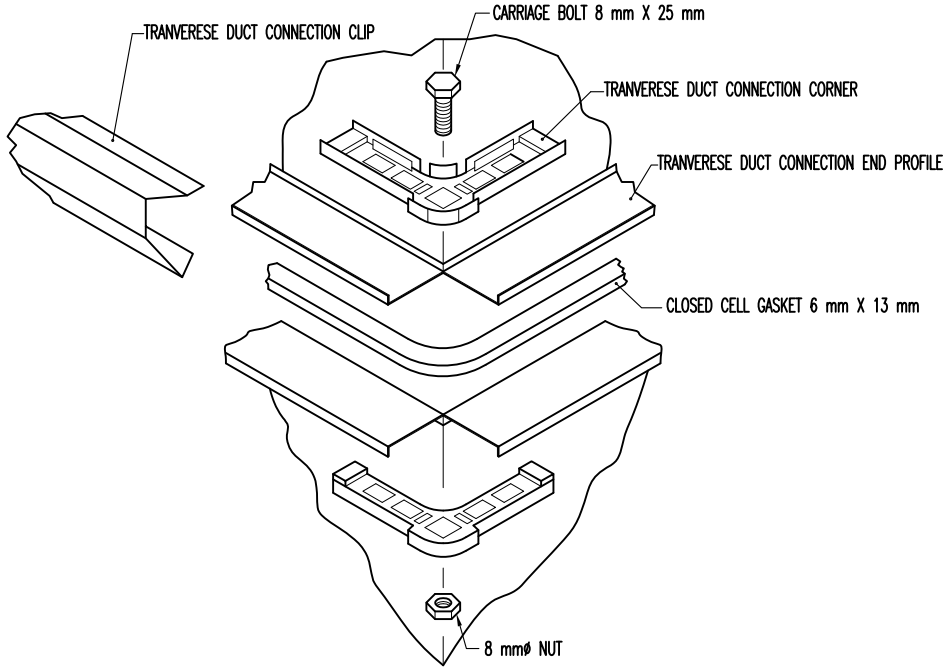

2(e)-CORNER ASSEMBLY

TDC JOINT & REINFORCEMENT

NOTE:

JKR
MEKANIKAL

JASA KEPADA RAKYAT

CAWANGAN KEJURUTERAAN MEKANIKAL
Ibu Pejabat JKR Malaysia

AIR CONDITIONING SYSTEM

TDC JOINT & REINFORCEMENT

DATE	SCALE
2017	N.T.S

DRAWING NUMBER
CKM/STD/AC/DUCT/REV2017/07

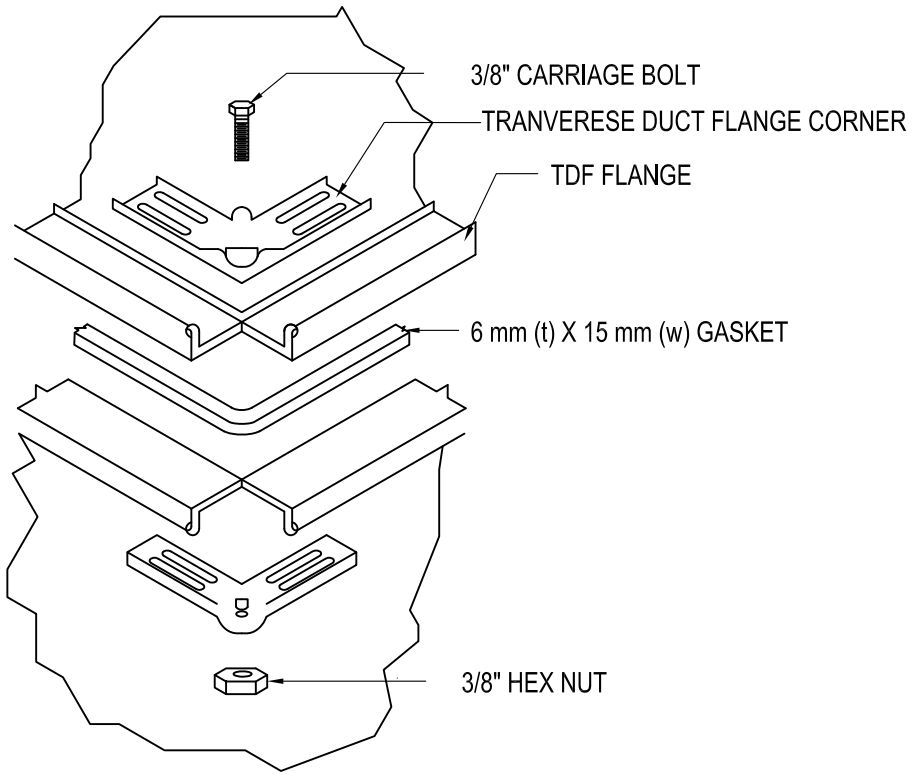

TRANVERSE DUCT FLANGE CORNER

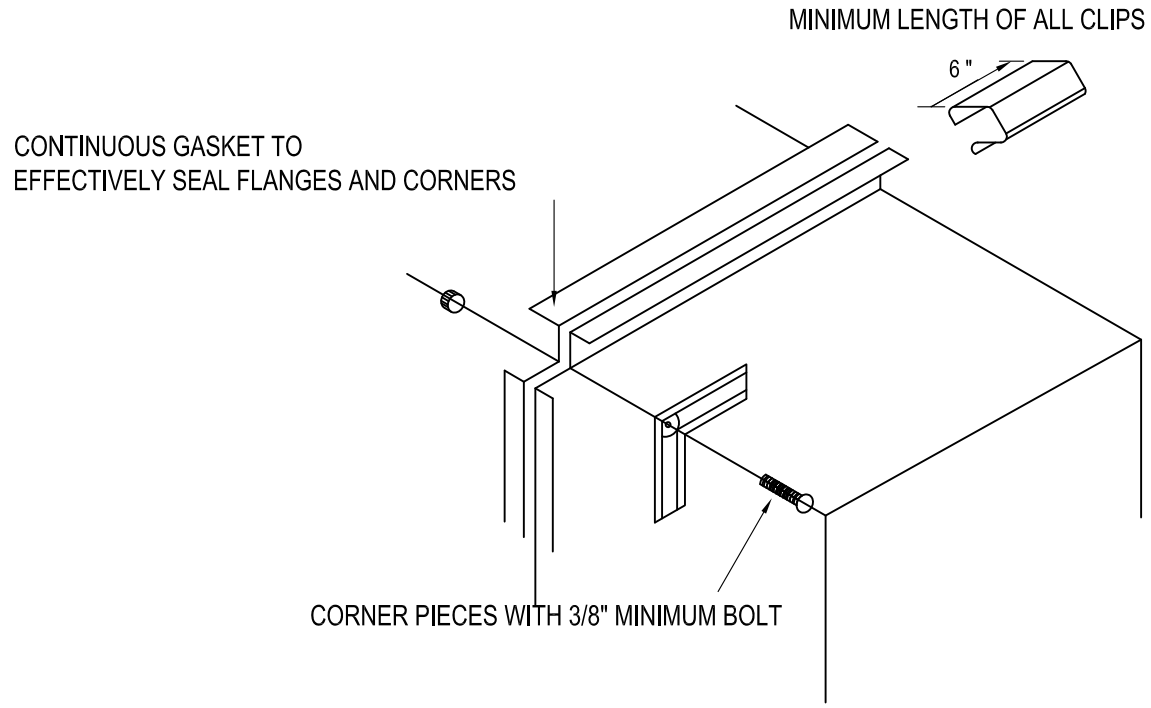

TRANVERSE DUCT FLANGE(TDF) JOINING METHOD

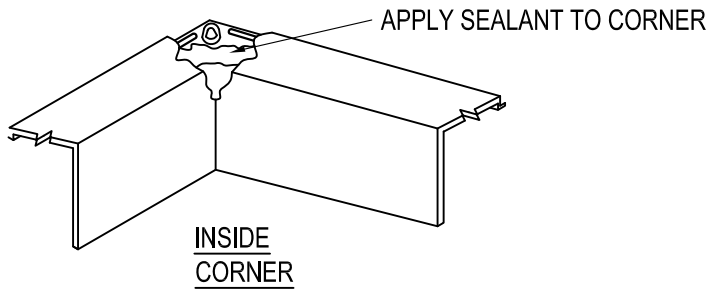

TRANVERSE DUCT FLANGE - SEALANT APPLICATION

NOTE:

JKR MEKANIKAL

JASA KEPADA RAKYAT

CAWANGAN KEJURUTERAAN MEKANIKAL
Ibu Pejabat JKR Malaysia

AIR CONDITIONING SYSTEM

DUCT JOINT DETAIL

DATE	SCALE
2017	N.T.S

DRAWING NUMBER

CKM/STD/AC/DUCT/REV2017/08

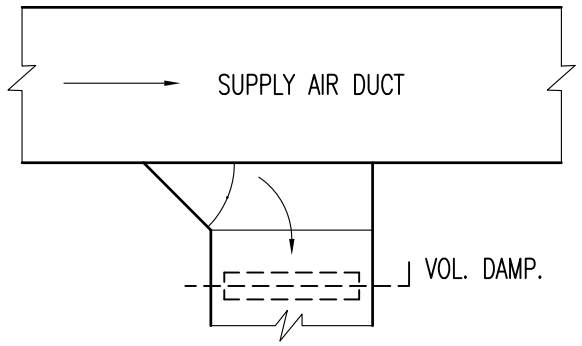

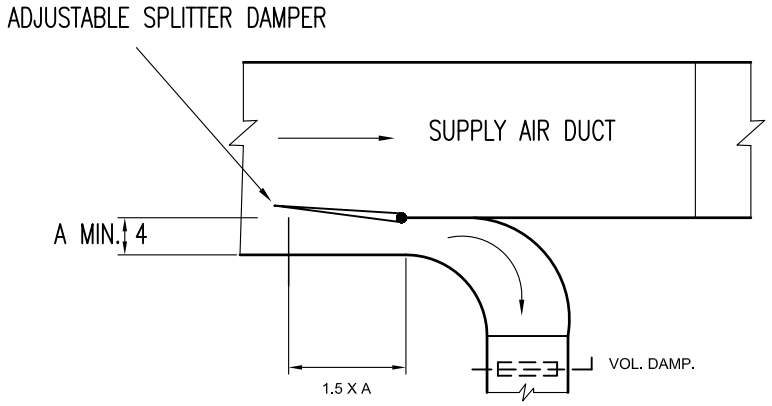

SMALL BRANCH DUCT TAKE-OFF FROM MAIN DUCT WITH VELOCITIES TO 1800 FPM (9m/s).

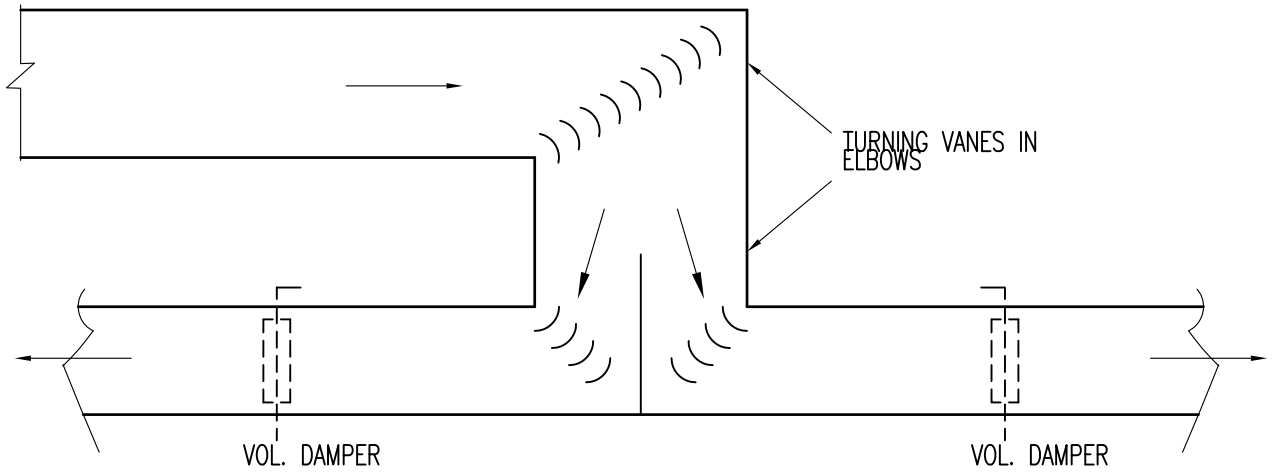

PREFERRED MAIN DUCT ELBOWS AND DIVIDED FLOW FITTING TO BRANCH DUCTS

NOTE:

JASA KEPADA RAKYAT

CAWANGAN KEJURUTERAAN MEKANIKAL
Ibu Pejabat JKR Malaysia

AIR CONDITIONING SYSTEM

DUCT CONSTRUCTION DETAIL

DATE	SCALE
2017	N.T.S

DRAWING NUMBER
CKM/STD/AC/DUCT/REV2017/09

AIR COOLED SPLIT UNIT

JKR
MEKANIKAL

JASA KEPADA RAKYAT

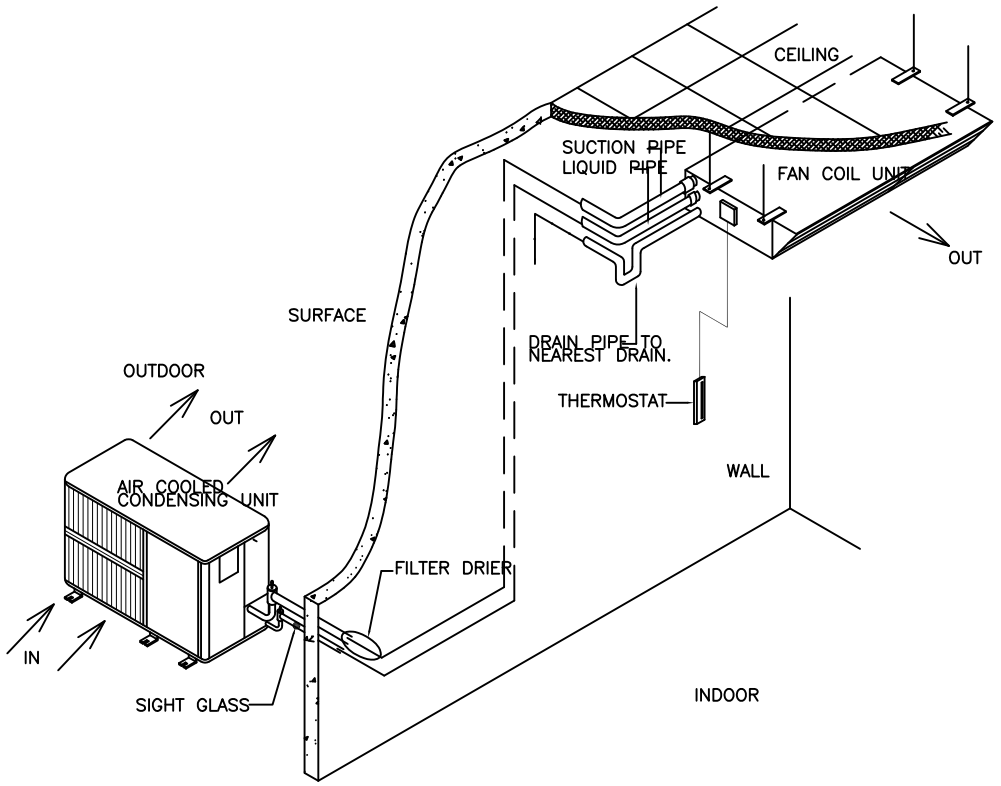

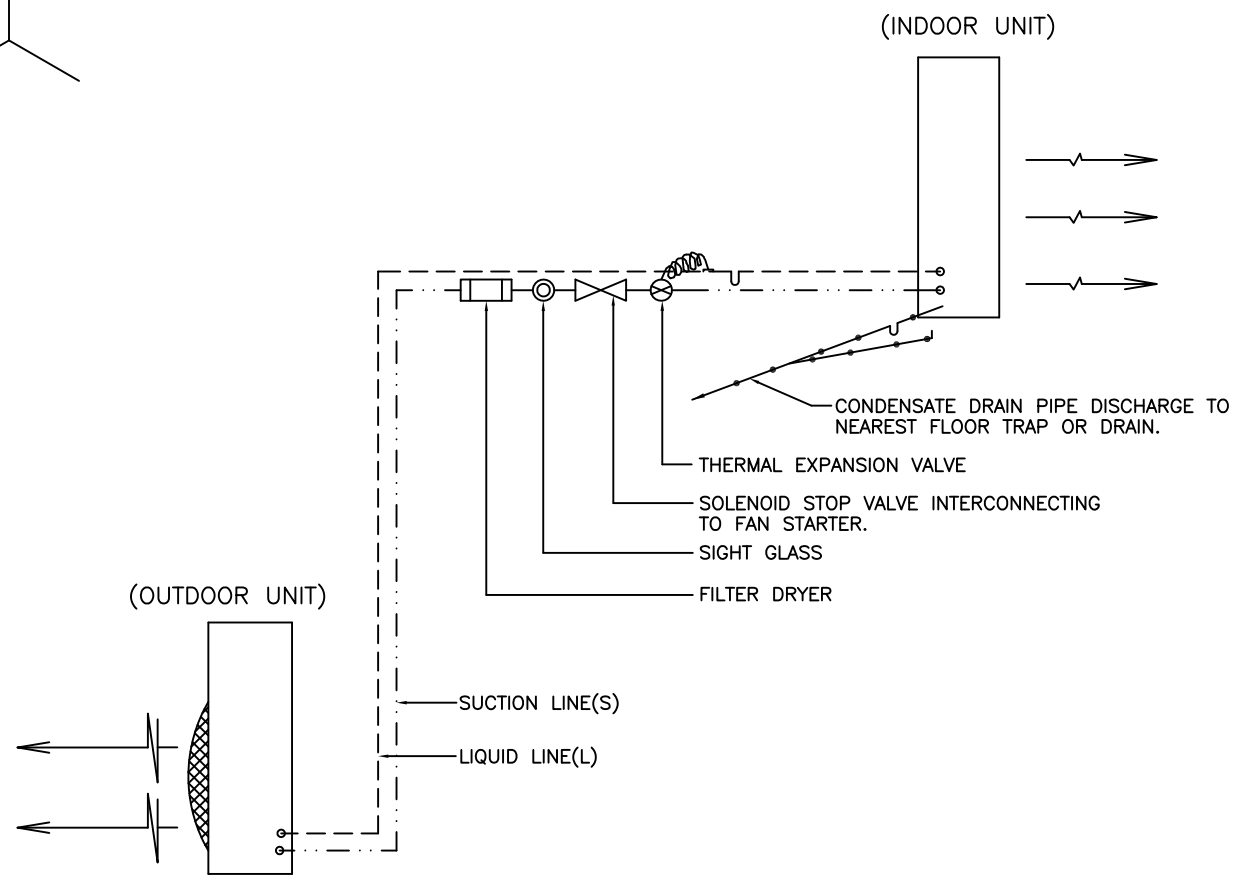

REFRIGERANT PIPING SCHEMATIC AND CONTROL DIAGRAM.

NOTE:

JASA KEPADA RAKYAT

CAWANGAN KEJURUTERAAN MEKANIKAL
Ibu Pejabat JKR Malaysia

AIR CONDITIONING SYSTEM

REFRIGERANT PIPING SCHEMATIC AND CONTROL DIAGRAM.

DATE	SCALE
2017	N.T.S

DRAWING NUMBER

CKM/STD/AC/SPLIT UNIT/REV2017/01

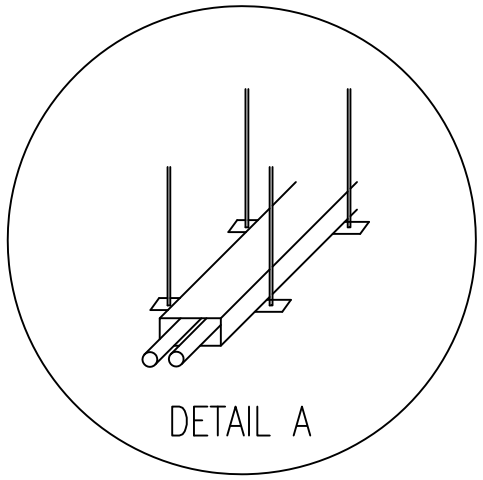

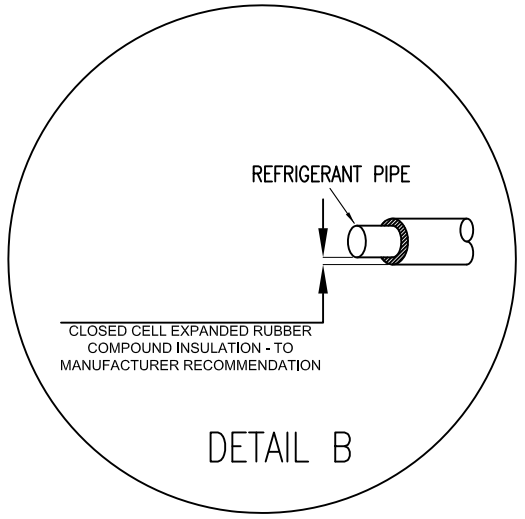

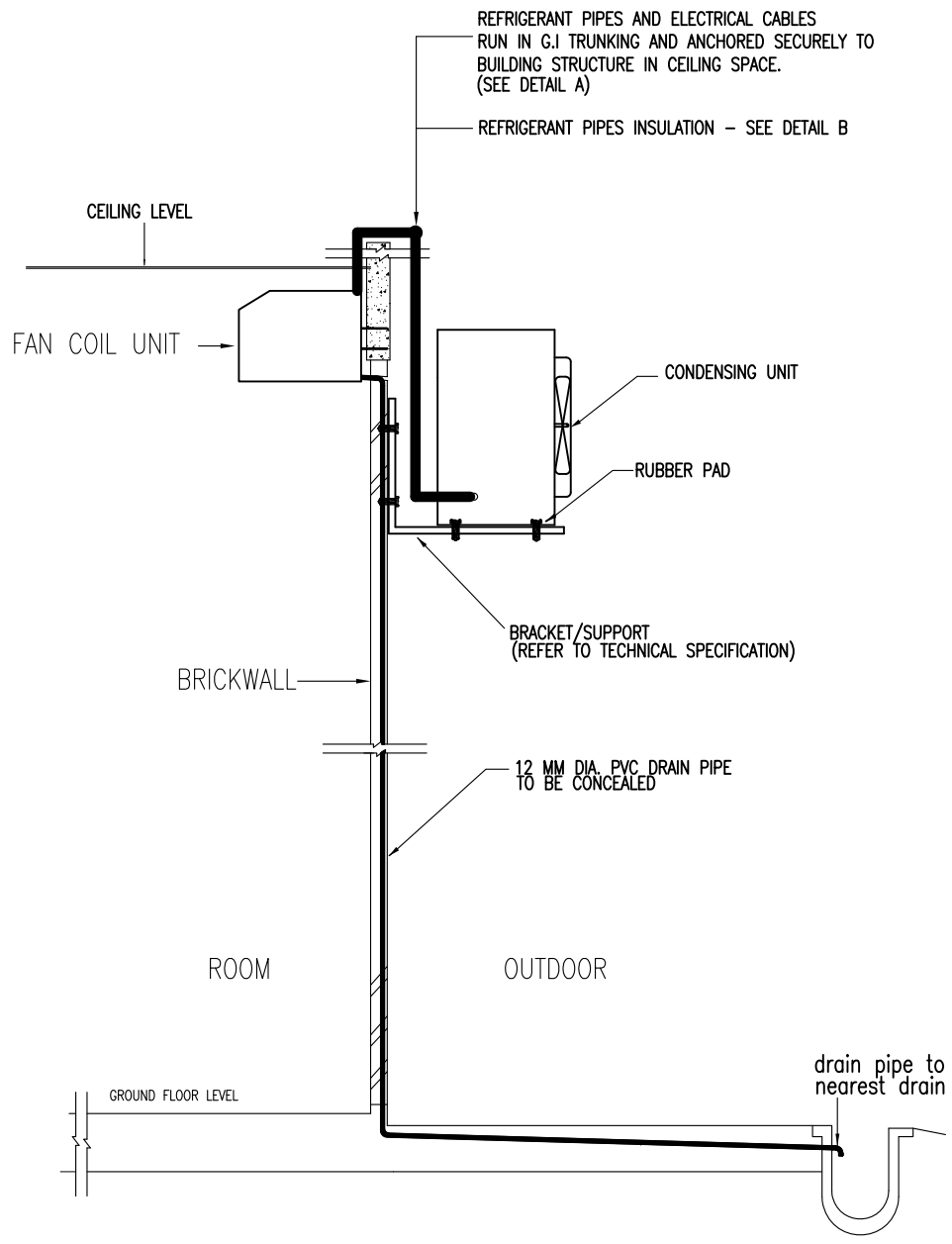

DETAIL INSTALLATION OF SPLIT UNIT AIR CONDITIONING SYSTEM
- REFRIGERANT PIPE RUN IN CEILING SPACE

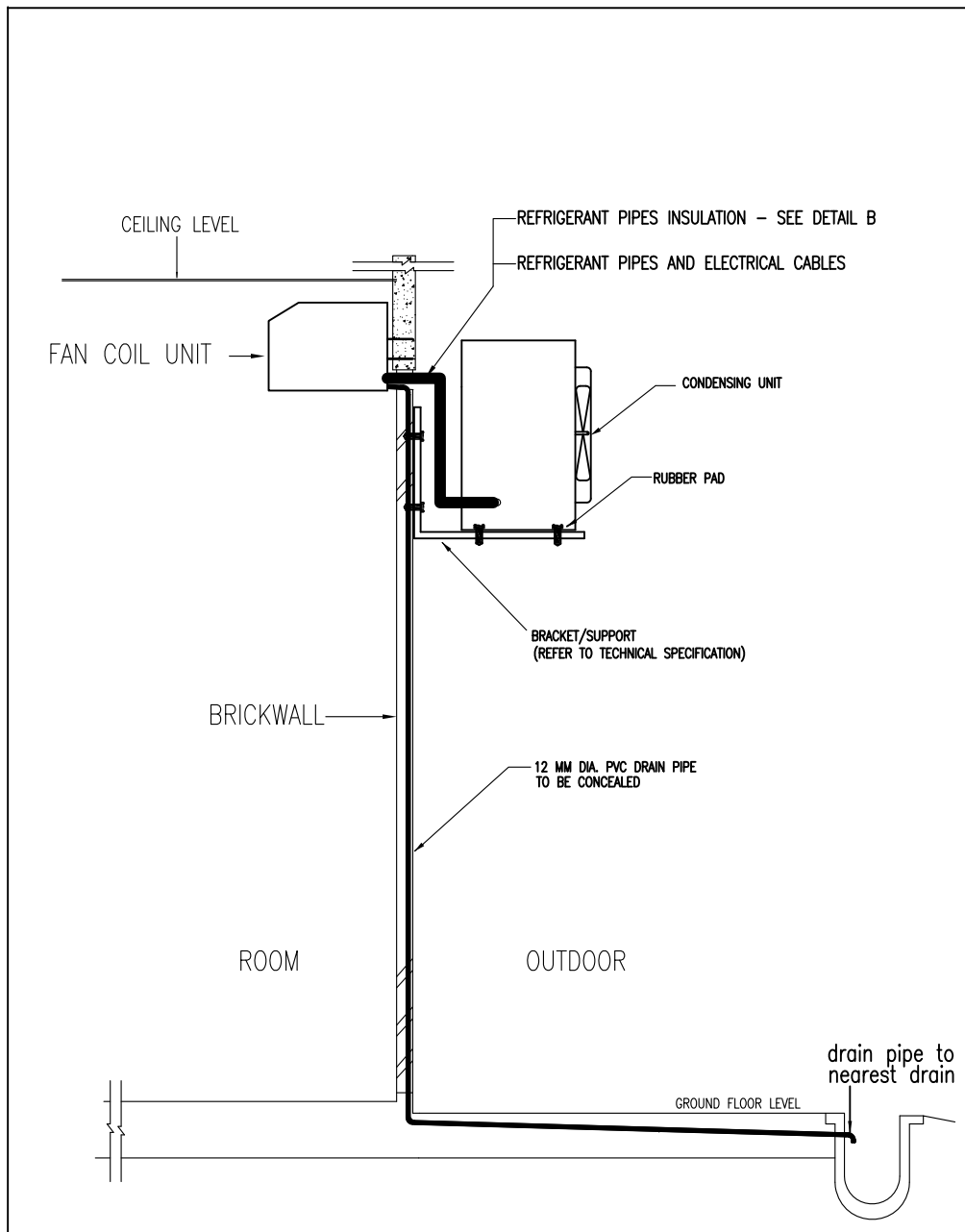

DETAIL INSTALLATION OF SPLIT UNIT AIR CONDITIONING SYSTEM
- BACK TO BACK SYSTEM

NOTE:

JKR MEKANIKAL

JASA KEPADA RAKYAT

CAWANGAN KEJURUTERAAN MEKANIKAL
Ibu Pejabat JKR Malaysia

AIR CONDITIONING SYSTEM

INSTALLATION OF SPLIT UNIT

DATE	SCALE
2017	N.T.S

DRAWING NUMBER

CKM/STD/AC/SPLIT UNIT/REV2017/02

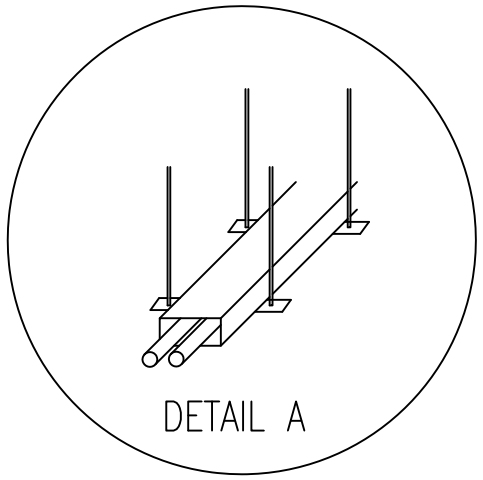

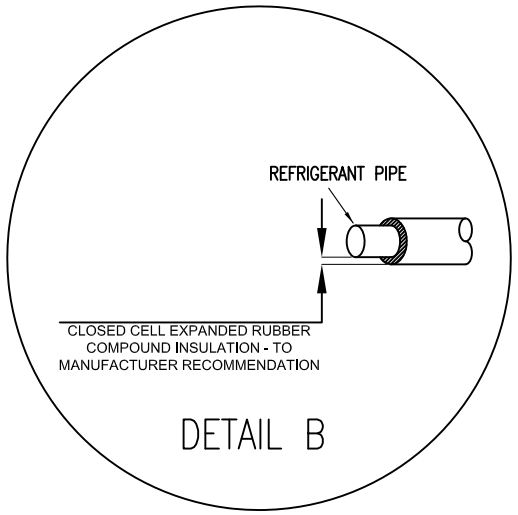

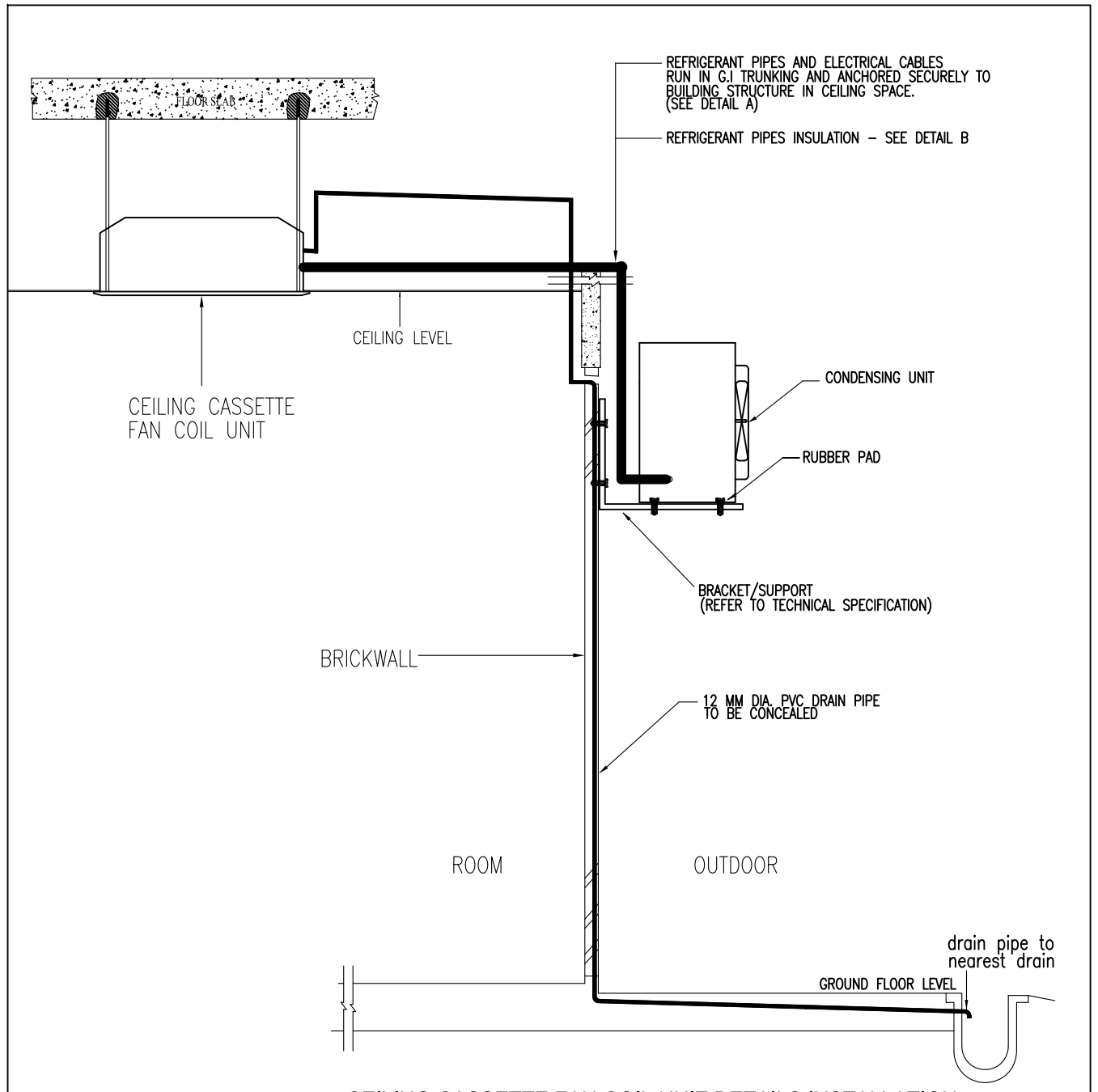

CEILING CASSETTE FAN COIL UNIT DETAILS INSTALLATION

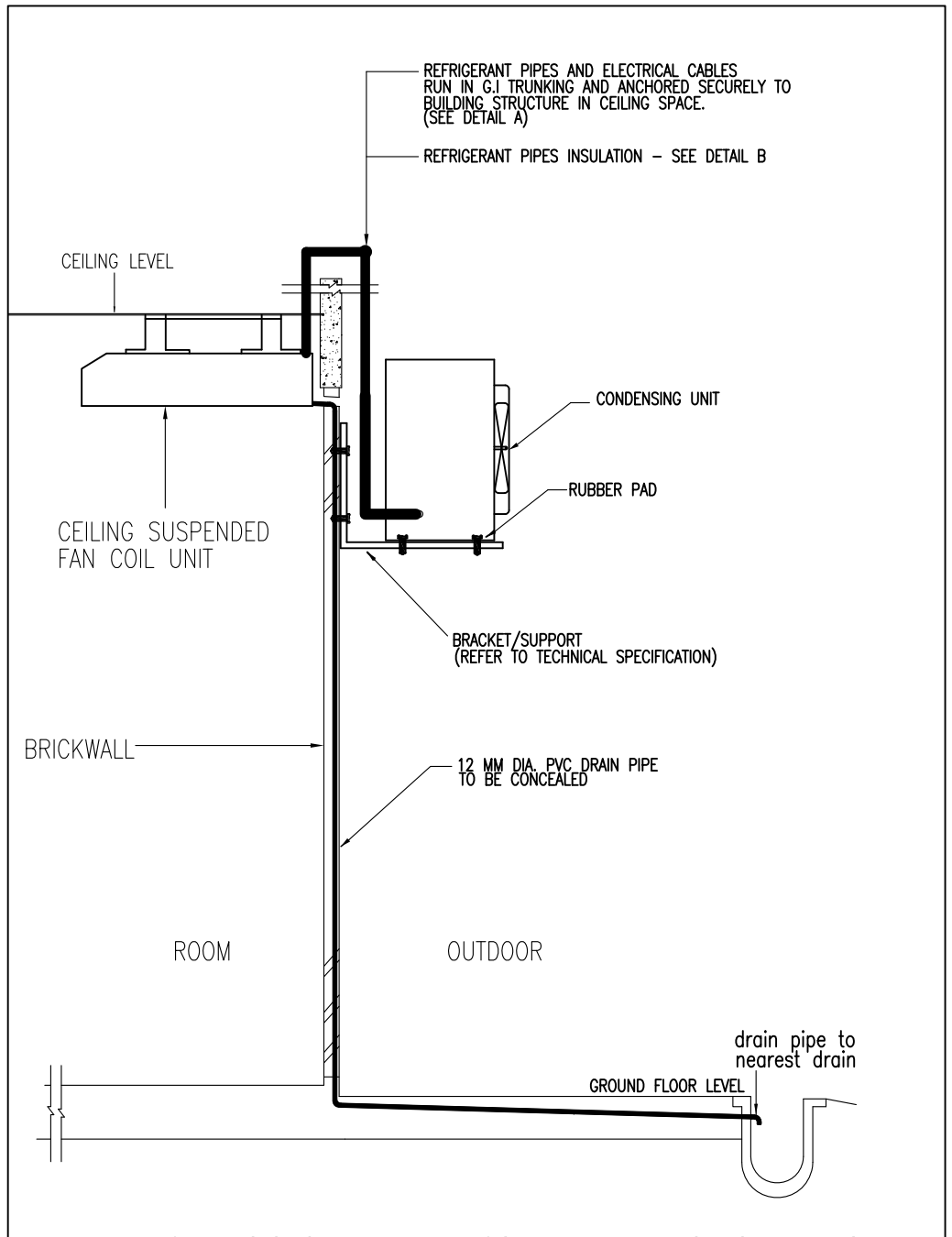

CEILING SUSPENDED FAN COIL UNIT DETAILS INSTALLATION

NOTE:

JKR MEKANIKAL

JASA KEPADA RAKYAT

CAWANGAN KEJURUTERAAN MEKANIKAL
Ibu Pejabat JKR Malaysia

AIR CONDITIONING SYSTEM

INSTALLATION OF SPLIT UNIT

DATE	SCALE
2017	N.T.S

DRAWING NUMBER

CKM/STD/AC/SPLIT UNIT/REV2017/03

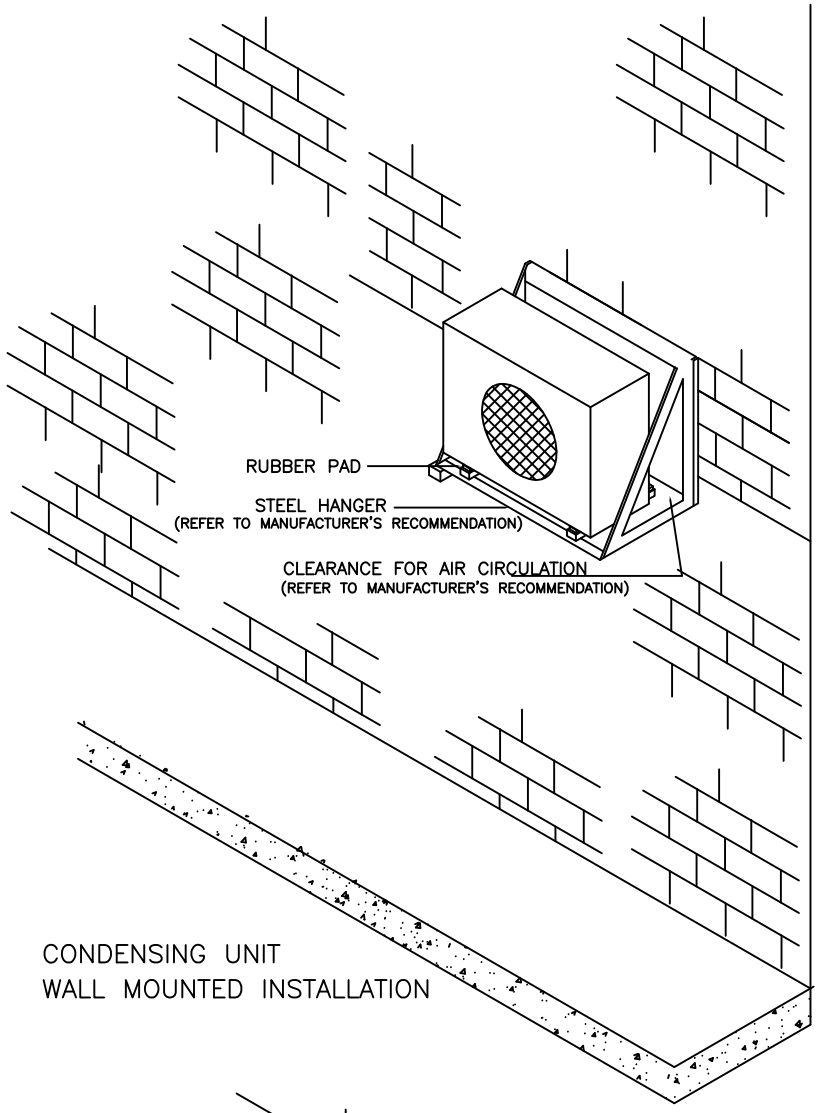

CONDENSING UNIT
WALL MOUNTED INSTALLATION

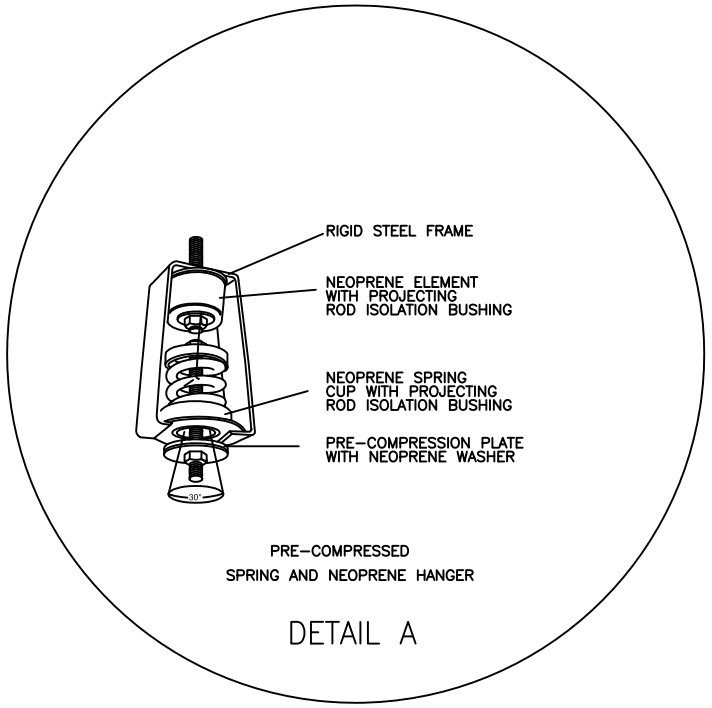

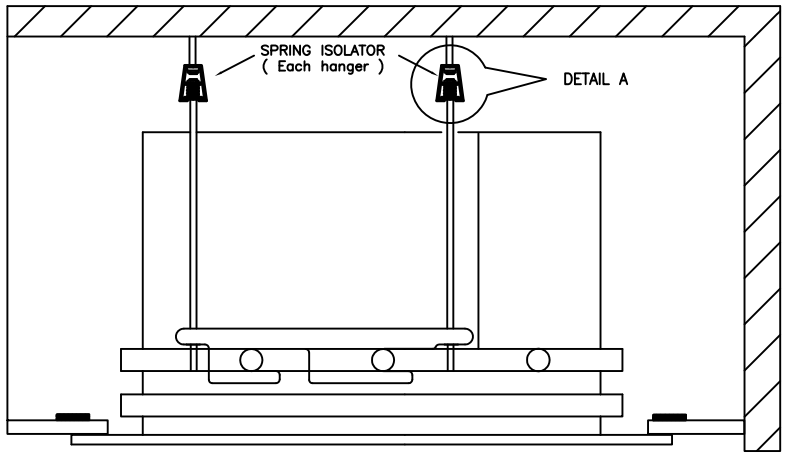

CEILING CASSETTE SPLIT AIR-CONDITIONER

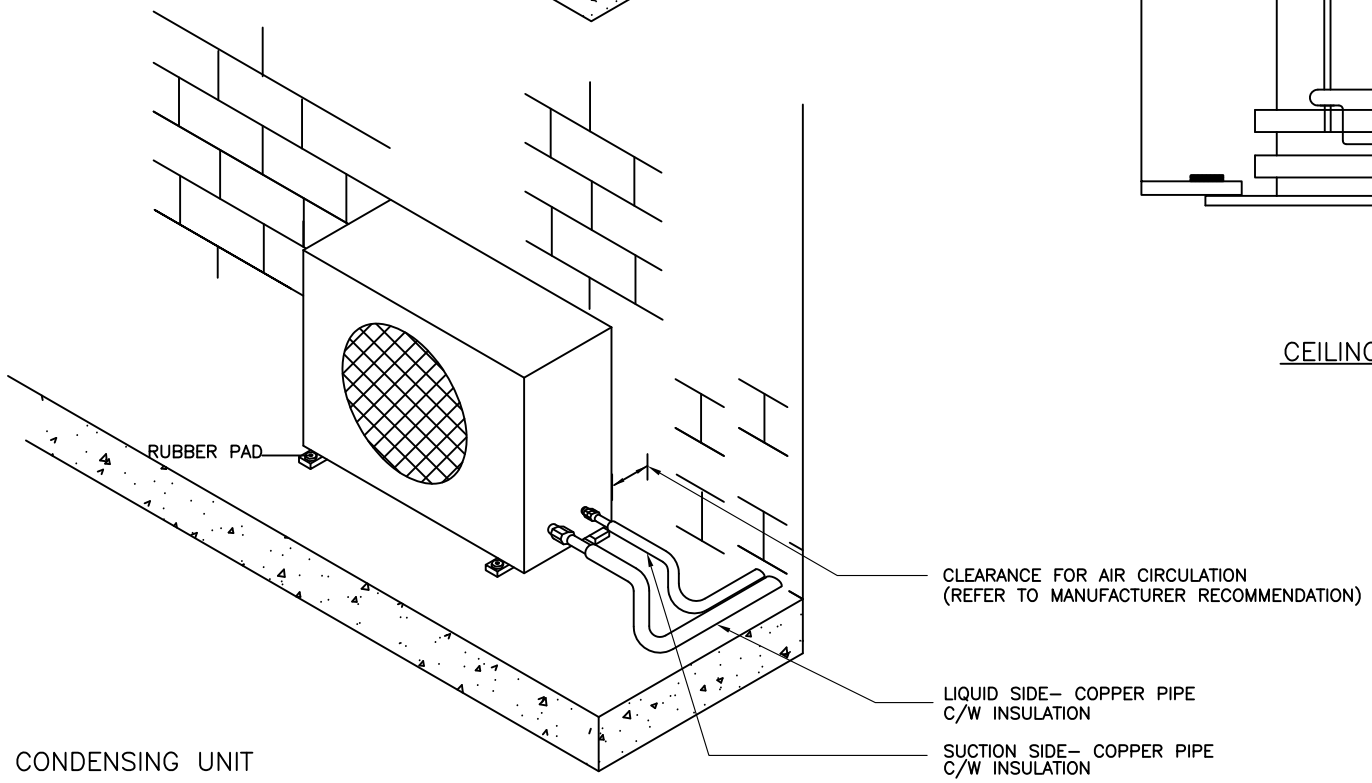

CONDENSING UNIT
FLOOR MOUNTED INSTALLATION

NOTE:

JKR MEKANIKAL

JASA KEPADA RAKYAT

CAWANGAN KEJURUTERAAN MEKANIKAL
Ibu Pejabat JKR Malaysia

AIR CONDITIONING SYSTEM

INSTALLATION OF SPLIT UNIT

DATE	SCALE
2017	N.T.S

DRAWING NUMBER
CKM/STD/AC/SPLIT UNIT/REV2017/04

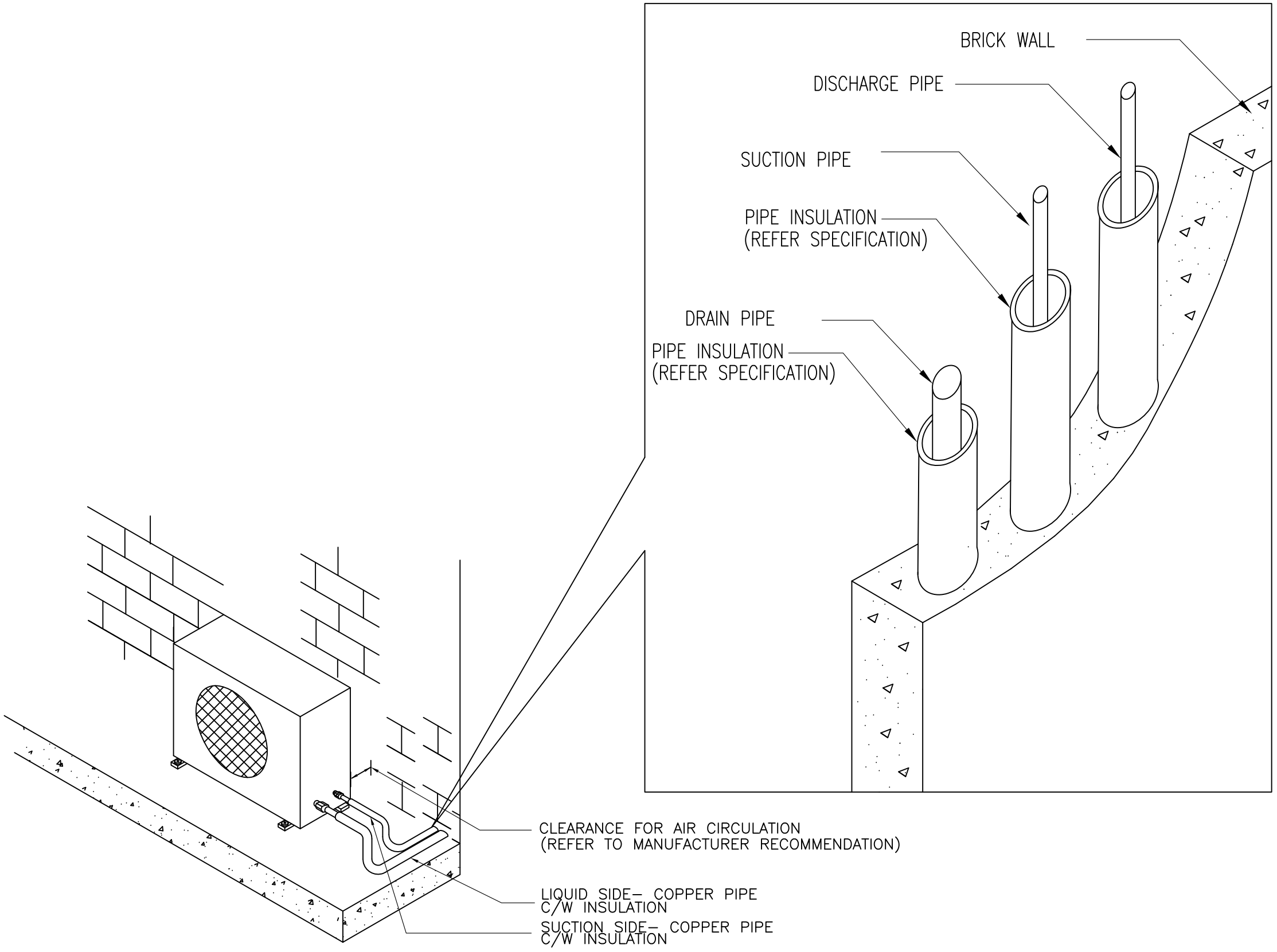

REFRIGERANT PIPE INSTALLATION CONCEALED IN BRICK WALL

NOTE:

JKR MEKANIKAL

JASA KEPADA RAKYAT

CAWANGAN KEJURUTERAAN MEKANIKAL
Ibu Pejabat JKR Malaysia

AIR CONDITIONING SYSTEM

REFRIGERANT PIPE INSTALLATION
CONCEALED IN BRICK WALL

DATE	SCALE
2017	N.T.S

DRAWING NUMBER
CKM/STD/AC/SPLIT UNIT/REV2017/05

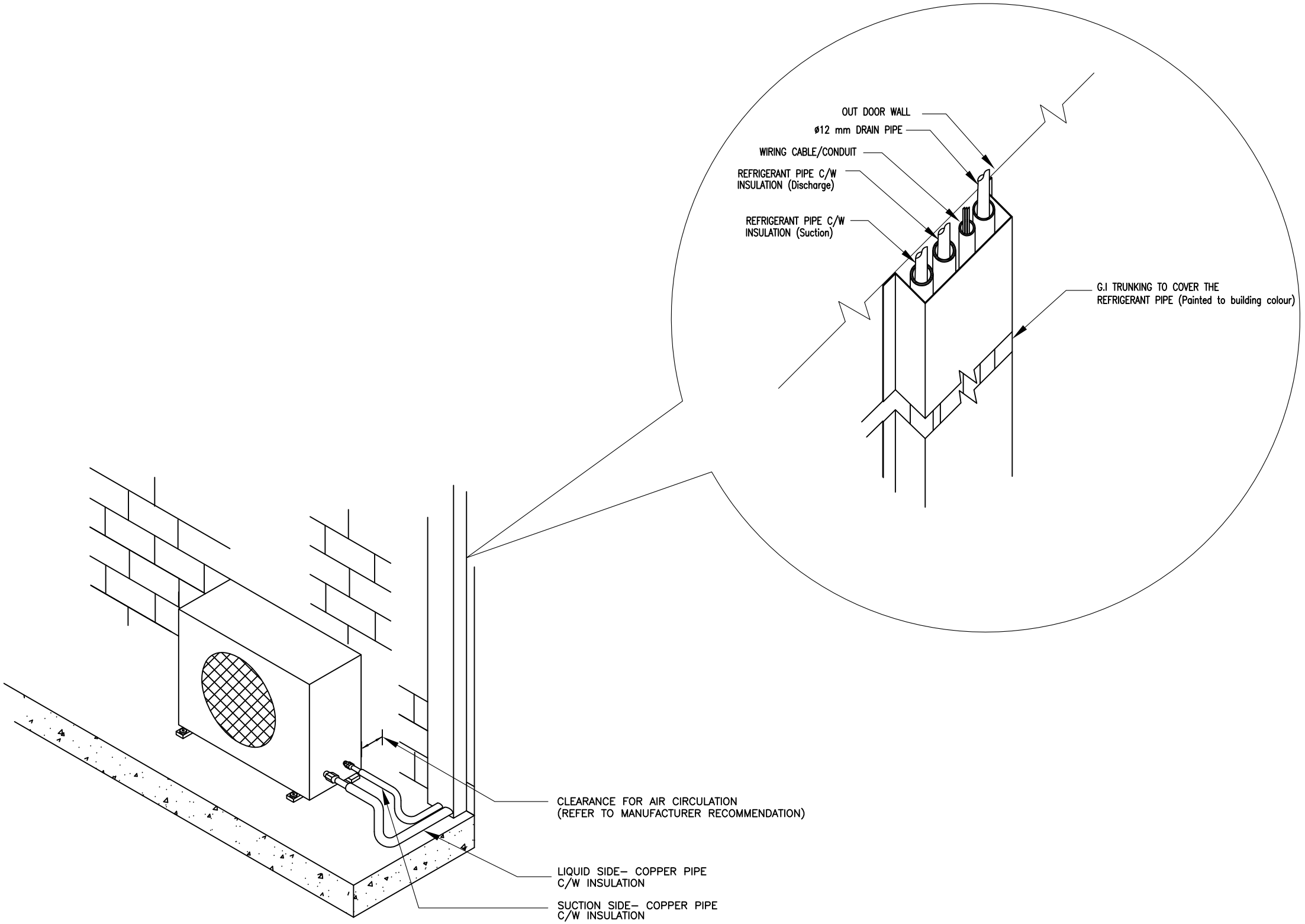

REFRIGERANT PIPE INSTALLATION USING GI TRUNKING

NOTE:

JKR MEKANIKAL

JASA KEPADA RAKYAT

CAWANGAN KEJURUTERAAN MEKANIKAL
Ibu Pejabat JKR Malaysia

AIR CONDITIONING SYSTEM

REFRIGERANT PIPE INSTALLATION USING GI TRUNKING

DATE	SCALE
2017	N.T.S

DRAWING NUMBER

CKM/STD/AC/SPLIT UNIT/REV2017/06

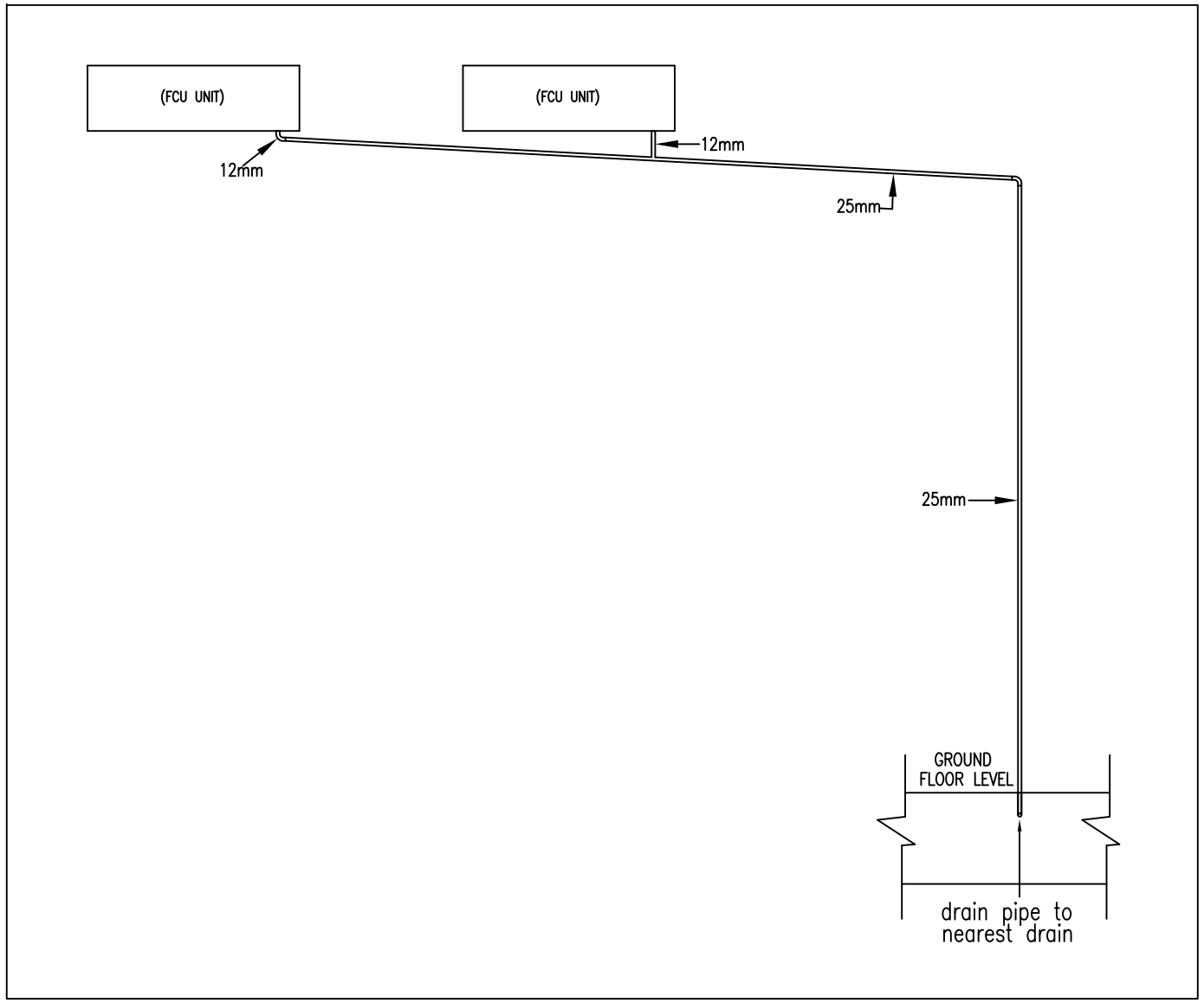

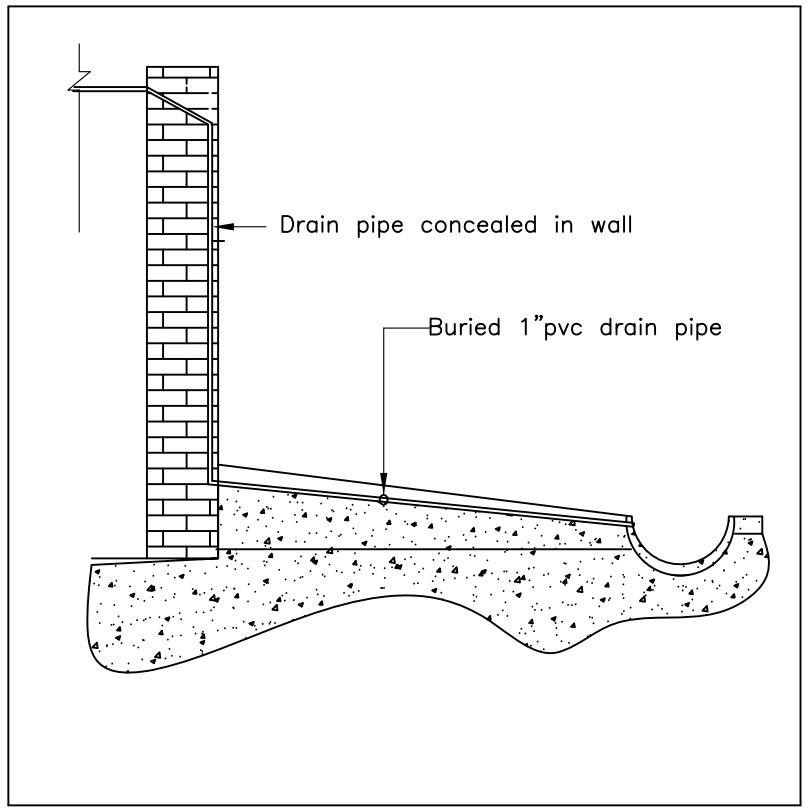

INSTALLATION OF CENTRALISED DRAIN PIPE.

NOTE:

JKR MEKANIKAL

JASA KEPADA RAKYAT

CAWANGAN KEJURUTERAAN MEKANIKAL
Ibu Pejabat JKR Malaysia

AIR CONDITIONING SYSTEM

INSTALLATION OF
CENTRALISED DRAIN PIPE

DATE	SCALE
2017	N.T.S

DRAWING NUMBER

CKM/STD/AC/SPLIT UNIT/REV2017/07

STANDARD MECHANICAL DESIGN DETAIL DRAWING FOR MECHANICAL SYSTEMS IN BUILDINGS

SECTION II : FIRE FIGHTING SYSTEM

CAWANGAN KEJURUTERAAN MEKANIKAL
IBU PEJABAT JKR MALAYSIA
KUALA LUMPUR

JKR
MEKANIKAL

JASA KEPADA RAKYAT

2017

FIRE FIGHTING SYSTEM

JKR
MEKANIKAL

JASA KEPADA RAKYAT

LIST OF DRAWINGS

NO.	DRAWING TITLE	DRAWING NUMBER
	LIST OF DRAWINGS	CKM/STD/FF/REV2017/INDEX
A	**WATER TANK SYSTEM**	
1	DETAIL OF HOSE REEL TANK INSTALLATION	CKM/STD/FF/WATER TANK/REV2017/01
2	DETAIL OF SPRINKLER AND WET RISER TANK INSTALLATION	CKM/STD/FF/WATER TANK/REV2017/02
3	DETAIL OF LEVEL INDICATOR INSTALLATION	CKM/STD/FF/WATER TANK/REV2017/03
4	DETAIL OF ELECTRODE INSTALLATION FOR FIRE FIGHTING TANK	CKM/STD/FF/WATER TANK/REV2017/04
5	DETAIL OF SPRINKLER AND WET RISER PUMP	CKM/STD/FF/WATER TANK/REV2017/05
B	**WATER PUMP SYSTEM**	
1	DETAIL OF SPRINKLER, WET RISER & PRESSURE HYDRANT PUMP (DIESEL ENGINE DRIVEN)	CKM/STD/FF/PUMP/REV2017/01
2	DETAIL OF HOSE REEL PUMP (DIESEL ENGINE DRIVEN)	CKM/STD/FF/PUMP/REV2017/02
3	DETAIL OF SPRINKLER, WET RISER & PRESSURE HYDRANT PUMP (ELECTRIC DRIVEN– GENSET)	CKM/STD/FF/PUMP/REV2017/03
4	DETAIL OF HOSE REEL PUMP(ELECTRIC DRIVEN – GENSET)	CKM/STD/FF/PUMP/REV2017/04
5	DETAIL OF DIESEL ENGINE INSTALLATION	CKM/STD/FF/PUMP/REV2017/05
6	TYPICAL VALVE ARRANGEMENT FOR END SUCTION PUMP	CKM/STD/FF/PUMP/REV2017/06
7	TYPICAL VALVE ARRANGEMENT FOR VERTICAL IN – LINE PUMP	CKM/STD/FF/PUMP/REV2017/07
8	DETAIL OF PUMP AND MOTOR INERTIA BLOCK FOR SPRINKLER AND WET RISER	CKM/STD/FF/PUMP/REV2017/08
9	DETAIL OF PLINTH AND INERTIA BLOCK FOR PUMP INSTALLATION FOR SPRINKLER AND WET RISER	CKM/STD/FF/PUMP/REV2017/09
C	**PIPE SYSTEM**	
1	TYPICAL ARRANGEMENT PIPE IN RISER	CKM/STD/FF/PIPE/REV2017/01
2	TYPICAL BRACKET FOR VERTICAL PIPES AT WALL	CKM/STD/FF/PIPE/REV2017/02
3	TYPICAL TYPES OF HANGERS	CKM/STD/FF/PIPE/REV2017/03
4	DETAILS OF PIPE HANGERS	CKM/STD/FF/PIPE/REV2017/04
5	TYPICAL PIPE HANGERS (PLANT ROOM) SPRINKLER AND WET RISER	CKM/STD/FF/PIPE/REV2017/05
6	DETAIL OF UNDERGROUND PIPING INSTALLATION	CKM/STD/FF/PIPE/REV2017/06
7	PIPE MECHANICAL JOINT COUPLING FOR SPRINKLER, WET RISER AND DRY RISER	CKM/STD/FF/PIPE/REV2017/07
8	DETAIL OF PIPES THROUGH WALLS AND FLOORS	CKM/STD/FF/PIPE/REV2017/08
9	TYPICAL VERTICAL PIPE RISER THROUGH FLOOR SLAB MOUNTING FOR SPRINKLER AND WET RISER	CKM/STD/FF/PIPE/REV2017/09
D	**SPRINKLER SYSTEM**	
1	DETAIL SPRINKLER CONTROL VALVE	CKM/STD/FF/SPRINKLER/REV2017/01
2	TYPICAL TYPES OF SPRINKLER AND INSTALLATION	CKM/STD/FF/SPRINKLER/REV2017/02
3	TYPICAL FLOW SWITCH AND BUTTERFLY VALVE INSTALLATION (SPRINKLER)	CKM/STD/FF/SPRINKLER/REV2017/03
E	**DRY & WET RISER**	
1	TYPICAL SIDE ELEVATION OF LANDING VALVE (DRY OR WET RISER)	CKM/STD/FF/DRY & WET RISER/REV2017/01
2	TYPICAL TYPES OF BREECHING INLET	CKM/STD/FF/DRY & WET RISER/REV2017/02
3	TYPICAL BREECHING INLET CABINET	CKM/STD/FF/DRY & WET RISER/REV2017/03
F	**HOSE REEL SYSTEM**	
1	DETAIL OF HOSE REEL CABINET	CKM/STD/FF/HOSE REEL/REV2017/01
2	DETAIL OF HOSE REEL INSTALLATION	CKM/STD/FF/HOSE REEL/REV2017/02
G	**EXTINGUISHER**	
1	DETAIL OF PORTABLE FIRE EXTINGUISHER INSTALLATION	CKM/STD/FF/EXTINGUISHER/REV2017/01

JKR MEKANIKAL

JASA KEPADA RAKYAT

CAWANGAN KEJURUTERAAN MEKANIKAL
Ibu Pejabat JKR Malaysia

FIRE FIGHTING SYSTEM

DRAWING INDEX

DATE	SCALE
2017	NTS

DRAWING NUMBER

CKM.BPK/STD/FF/2011/INDEX/01

LIST OF DRAWINGS

NO.	DRAWING TITLE	DRAWING NUMBER
H	SWITCHBOARD	
1	TYPICAL CIRCUIT DIAGRAM FOR PUMP SWITCHBOARD	CKM/STD/FF/SWITCHBOARD/REV2017/01
2	TYPICAL PUMP SWITCHBOARD FOR HOSE REEL, SPRINKLER & WET RISER SYSTEM	CKM/STD/FF/SWITCHBOARD/REV2017/02
3	TYPICAL SWITCHBOARD TYPES FOR FIRE SUPPRESSION SYSTEM	CKM/STD/FF/SWITCHBOARD/REV2017/03
4	SISTEM PENGAWASAN KEBAKARAN AUTOMATIK (SPKA)	CKM/STD/FF/SWITCHBOARD/REV2017/04
I	FIRE ALARM SYSTEM	
1	DETAIL OF SMOKE OR HEAT DETECTOR INSTALLATION	CKM/STD/FF/FIRE ALARM/REV2017/01
2	DETAIL OF ALARM BELL AND BREAK GLASS INSTALLATION	CKM/STD/FF/FIRE ALARM/REV2017/02
3	TYPICAL ADDRESSABLE FIRE ALARM PANEL	CKM/STD/FF/FIRE ALARM/REV2017/03
4	TYPICAL SCHEMATIC DIAGRAM FOR ADDRESSABLE FIRE ALARM SYSTEM	CKM/STD/FF/FIRE ALARM/REV2017/04
5	TYPICAL CONVENTIONAL FIRE ALARM PANEL	CKM/STD/FF/FIRE ALARM/REV2017/05
J	FIRE CURTAIN	
1	DETAIL OF FIRE CURTAIN	CKM/STD/FF/FIRE CURTAIN/REV2017/01
K	WET CHEMICAL	
1	TYPICAL OF WET CHEMICAL SYSTEM	CKM/STD/FF/WET CHEMICAL/REV2017/01
L	FIRE SUPPRESSION	
1	TYPICAL OF FIRE SUPPRESSION SYSTEM	CKM/STD/FF/FIRE SUPPRESSION/REV2017/01
M	PRESSURIZATION SYSTEM	
1	TYPICAL OF PRESSURIZATION SYSTEM(LOBBY)	CKM/STD/FF/PRESSURIZATION/REV2017/01
2	TYPICAL OF PRESSURIZATION SYSTEM(STAIRCASE)	CKM/STD/FF/PRESSURIZATION/REV2017/02
3	TYPES OF FAN INSTALLATION	CKM/STD/FF/PRESSURIZATION/REV2017/03
4	TYPES OF FAN INSTALLATION	CKM/STD/FF/PRESSURIZATION/REV2017/04
5	TYPICAL TYPE OF DUCT INSTALLATION	CKM/STD/FF/PRESSURIZATION/REV2017/05
6	TYPICAL TYPE OF DUCT INSTALLATION	CKM/STD/FF/PRESSURIZATION/REV2017/06
N	SMOKE SPILL SYSTEM	
1	TYPICAL OF SMOKE SPILL SYSTEM	CKM/STD/FF/SMOKE SPILL/REV2017/01
2	TYPICAL TYPE OF FAN INSTALLATION	CKM/STD/FF/SMOKE SPILL/REV2017/02
3	TYPES TYPES OF FAN INSTALLATION	CKM/STD/FF/SMOKE SPILL/REV2017/03
4	TYPICAL TYPES OF DUCT INSTALLATION	CKM/STD/FF/SMOKE SPILL/REV2017/04
5	TYPICAL TYPES OF DUCT INSTALLATION	CKM/STD/FF/SMOKE SPILL/REV2017/05
6	TYPICAL TYPES OF DUCT INSTALLATION	CKM/STD/FF/SMOKE SPILL/REV2017/06

JKR MEKANIKAL

JASA KEPADA RAKYAT

CAWANGAN KEJURUTERAAN MEKANIKAL
Ibu Pejabat JKR Malaysia

FIRE FIGHTING SYSTEM

DRAWING INDEX

DATE	SCALE
2017	NTS

DRAWING NUMBER

CKM.BPK/STD/FF/2011/INDEX/02

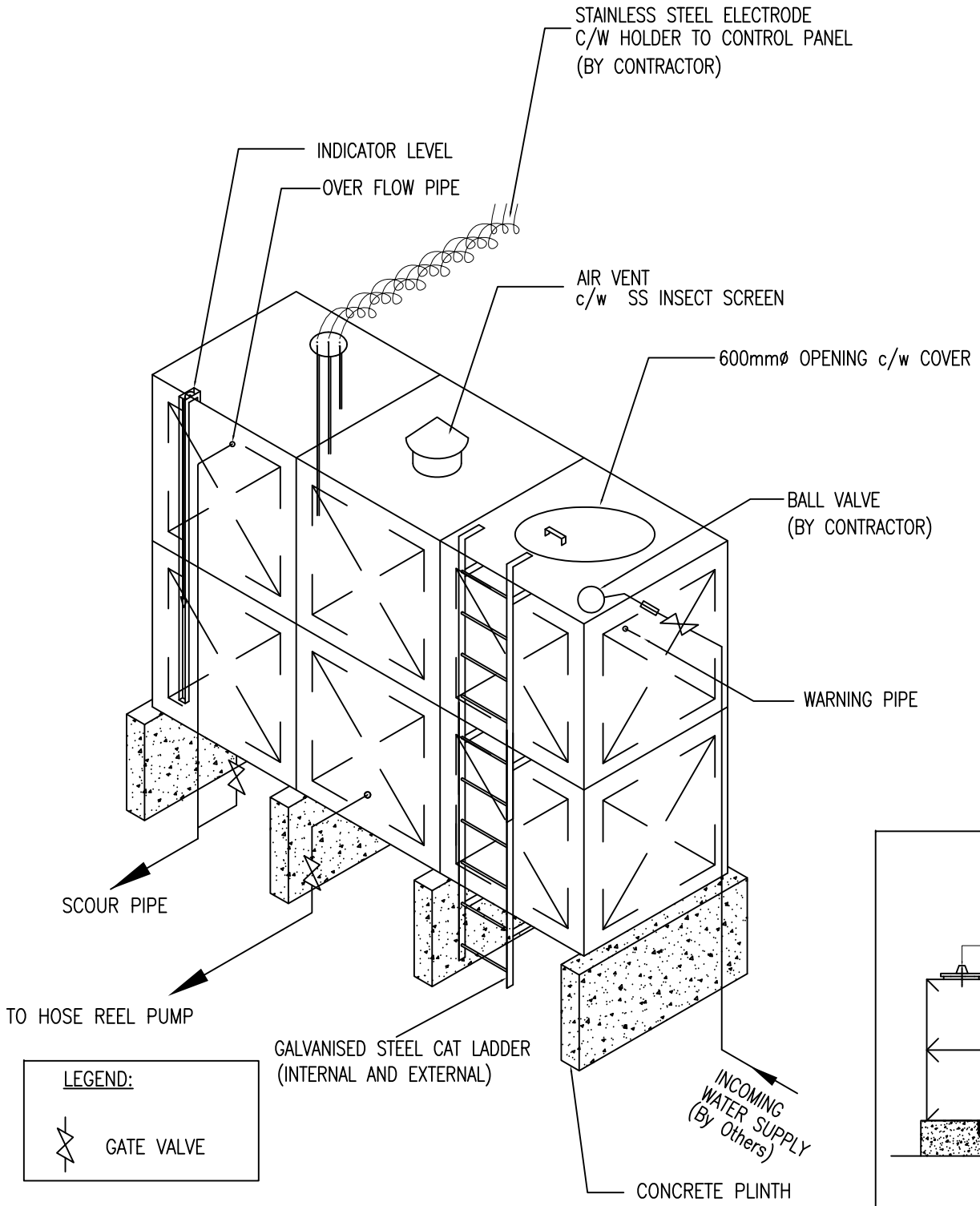

LEGEND:

GATE VALVE

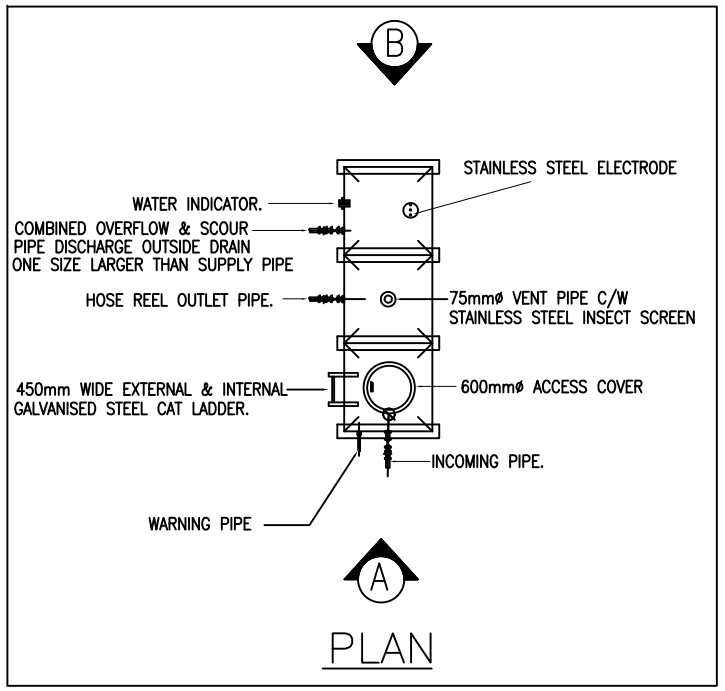

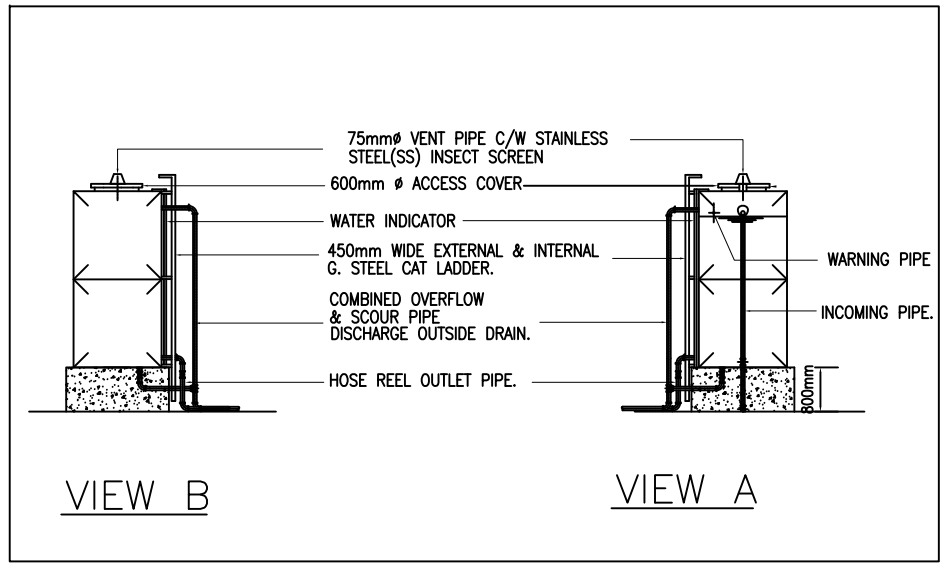

NOTE:

PLEASE REFER TO THE SCHEMATIC FOR THE EXACT TANK SIZE

DETAIL OF HOSE REEL TANK INSTALLATION

JKR MEKANIKAL

JASA KEPADA RAKYAT

CAWANGAN KEJURUTERAAN MEKANIKAL
Ibu Pejabat JKR Malaysia

FIRE FIGHTING SYSTEM

DETAIL OF HOSE REEL TANK INSTALLATION

DATE	SCALE
2017	NTS

DRAWING NUMBER

CKM/STD/FF/WATER TANK/REV2017/01

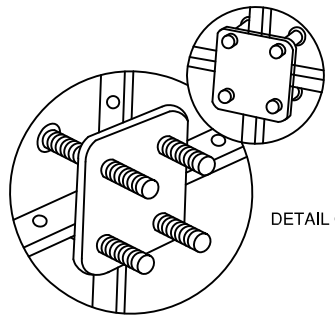

DETAIL OF `A'

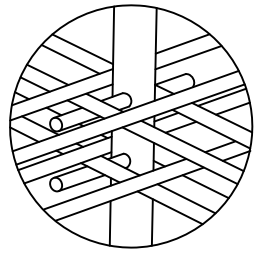

DETAIL OF `B'

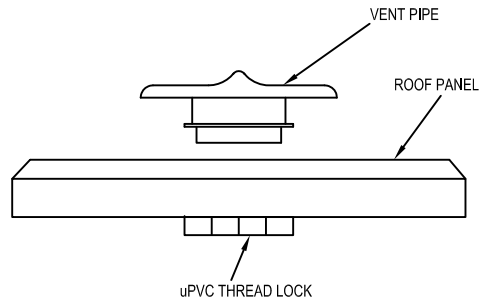

DETAIL OF INSTALLATION FOR VENT PIPE

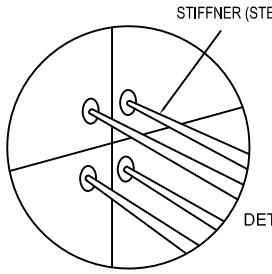

DETAIL OF `C'

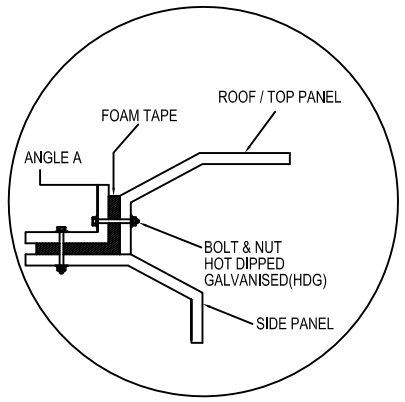

DETAIL OF `D':
DETAIL OF INSTALLATION FOR ROOF PANEL

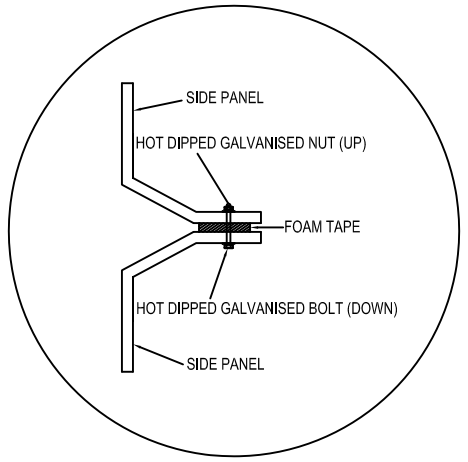

DETAIL OF `E':
DETAIL OF INSTALLATION FOR SIDE PANEL

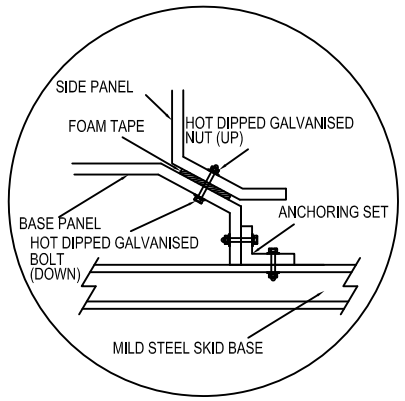

DETAIL OF `F':
DETAIL OF INSTALLATION FOR BASE PANEL

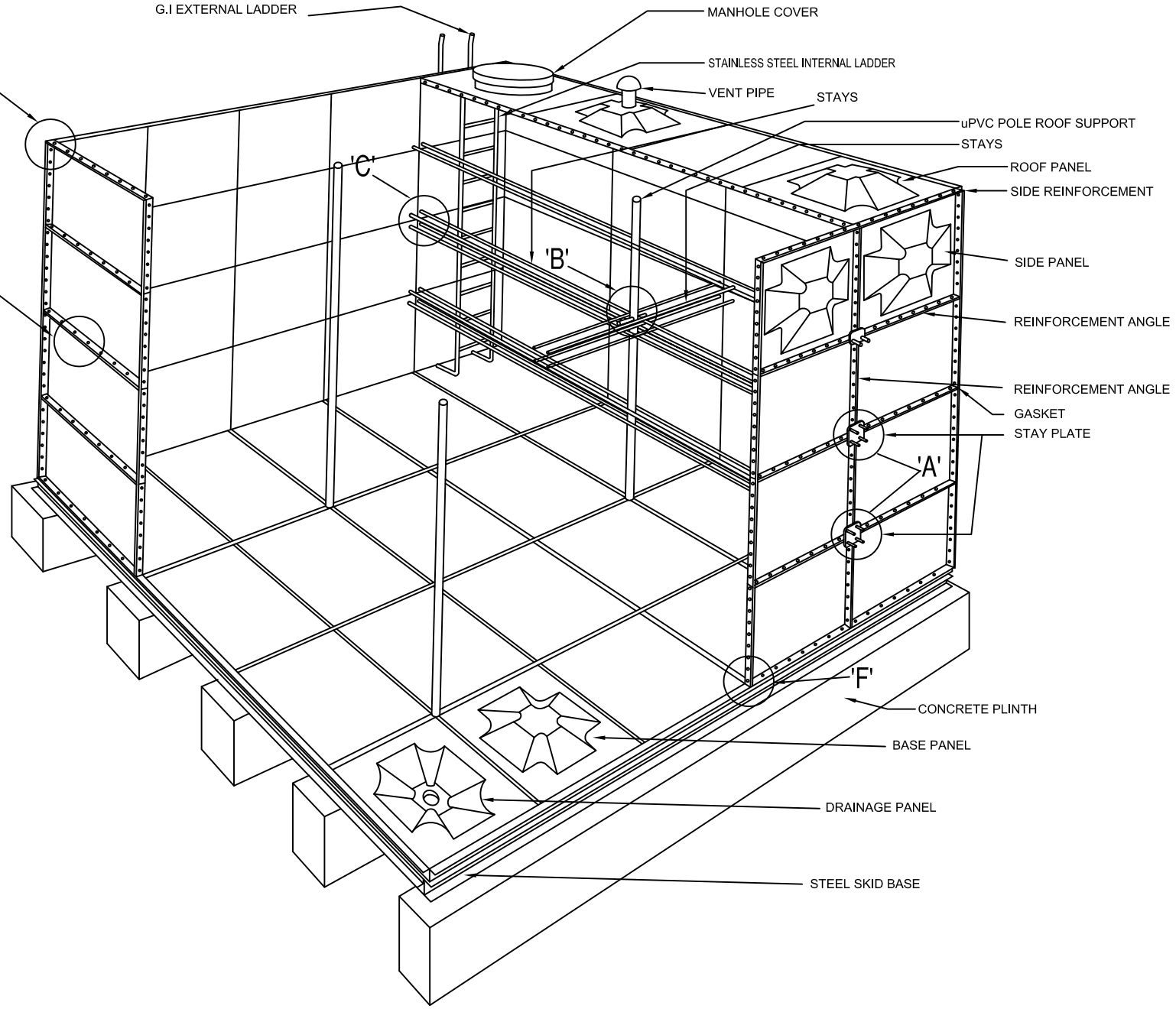

DETAIL OF FRP INTERNAL REINFORCEMENT SUPPORT & PANEL

SCALE : NTS

JKR MEKANIKAL

JASA KEPADA RAKYAT

CAWANGAN KEJURUTERAAN MEKANIKAL
Ibu Pejabat JKR Malaysia

FIRE FIGHTING SYSTEM

DETAIL OF FRP INTERNAL REINFORCEMENT SUPPORT & PANEL

DATE	SCALE
2017	NTS

DRAWING NUMBER

CKM/STD/FF/WATER TANK/REV2017/02

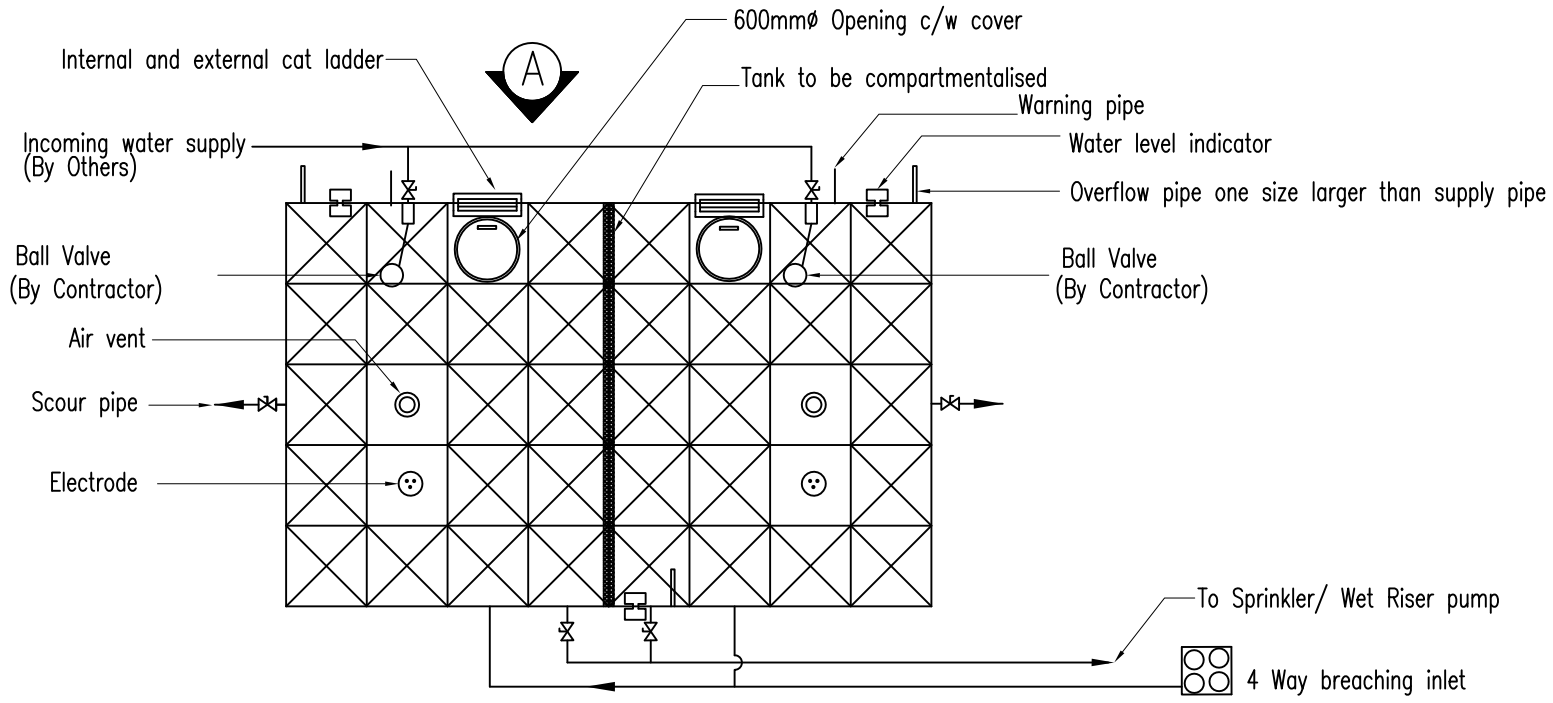

B

PLAN VIEW

NOTE:

REFER TO THE SCHEMATIC FOR THE EXACT TANK SIZE

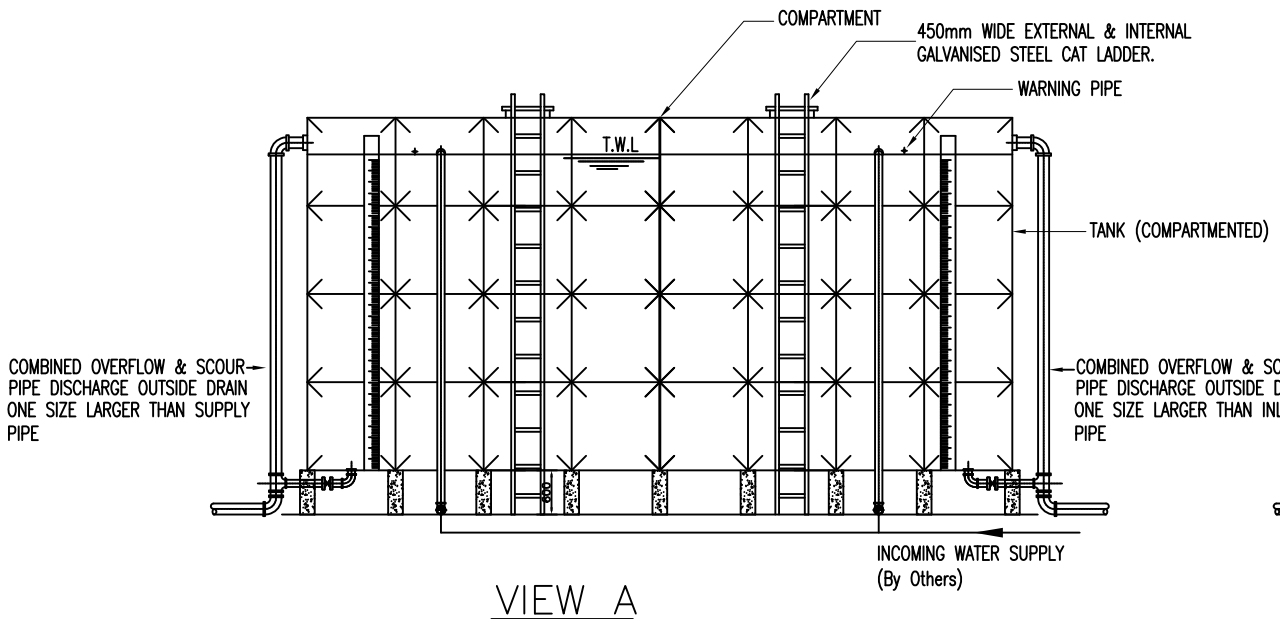

VIEW A

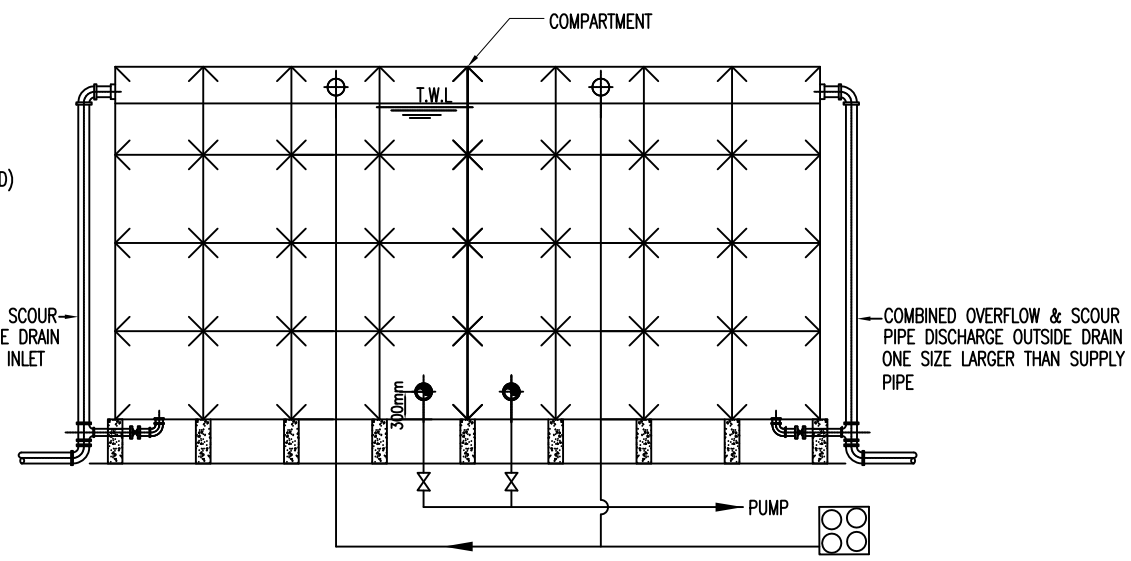

VIEW B

DETAIL OF SPRINKLER AND WET RISER TANK INSTALLATION

JKR MEKANIKAL

JASA KEPADA RAKYAT

CAWANGAN KEJURUTERAAN MEKANIKAL
Ibu Pejabat JKR Malaysia

FIRE FIGHTING SYSTEM

DETAIL OF SPRINKLER AND WET RISER TANK INSTALLATION

DATE	SCALE
2017	NTS

DRAWING NUMBER

CKM/STD/FF/WATER TANK/REV2017/03

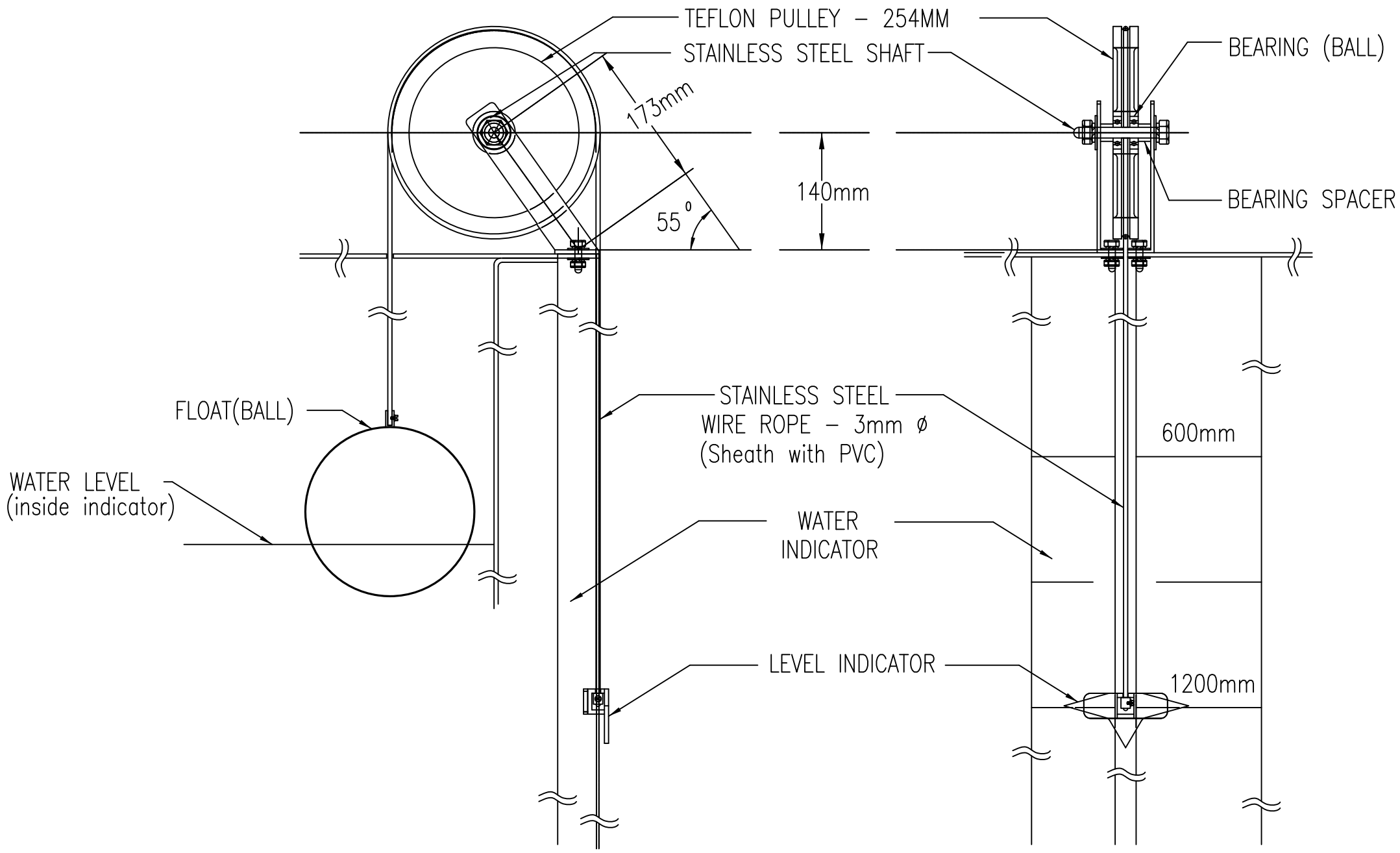

DETAIL OF LEVEL INDICATOR INSTALLATION

JKR MEKANIKAL

JASA KEPADA RAKYAT

CAWANGAN KEJURUTERAAN MEKANIKAL
Ibu Pejabat JKR Malaysia

FIRE FIGHTING SYSTEM

DETAIL OF LEVEL INDICATOR INSTALLATION

DATE	SCALE
2017	NTS

DRAWING NUMBER
CKM/STD/FF/WATER TANK/REV2017/04

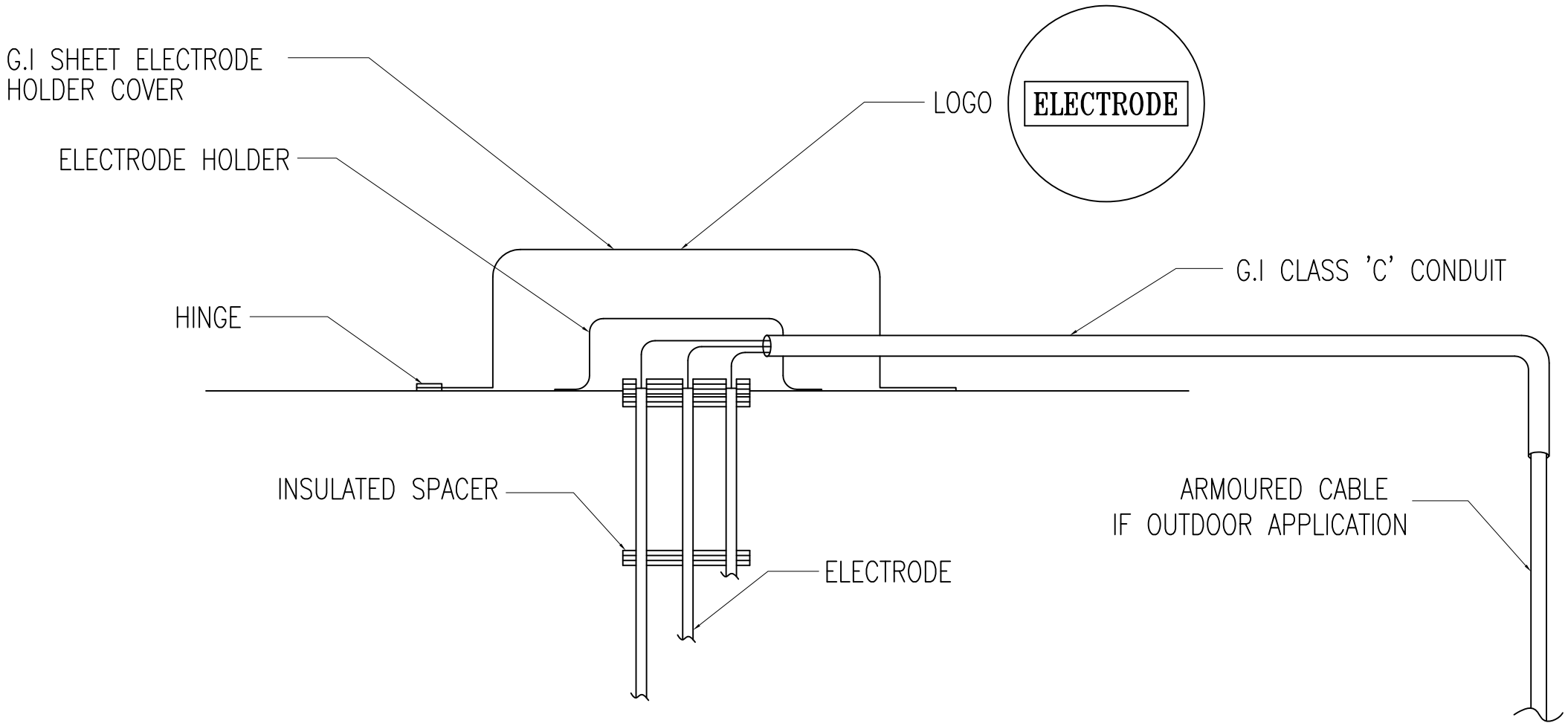

DETAIL OF ELECTRODE INSTALLATION FOR FIRE FIGHTING TANK

JKR MEKANIKAL

JASA KEPADA RAKYAT

CAWANGAN KEJURUTERAAN MEKANIKAL
Ibu Pejabat JKR Malaysia

FIRE FIGHTING SYSTEM

DETAIL OF ELECTRODE INSTALLATION FOR FIRE FIGHTING TANK

DATE	SCALE
2017	NTS

DRAWING NUMBER
CKM/STD/FF/WATER TANK/REV2017/05

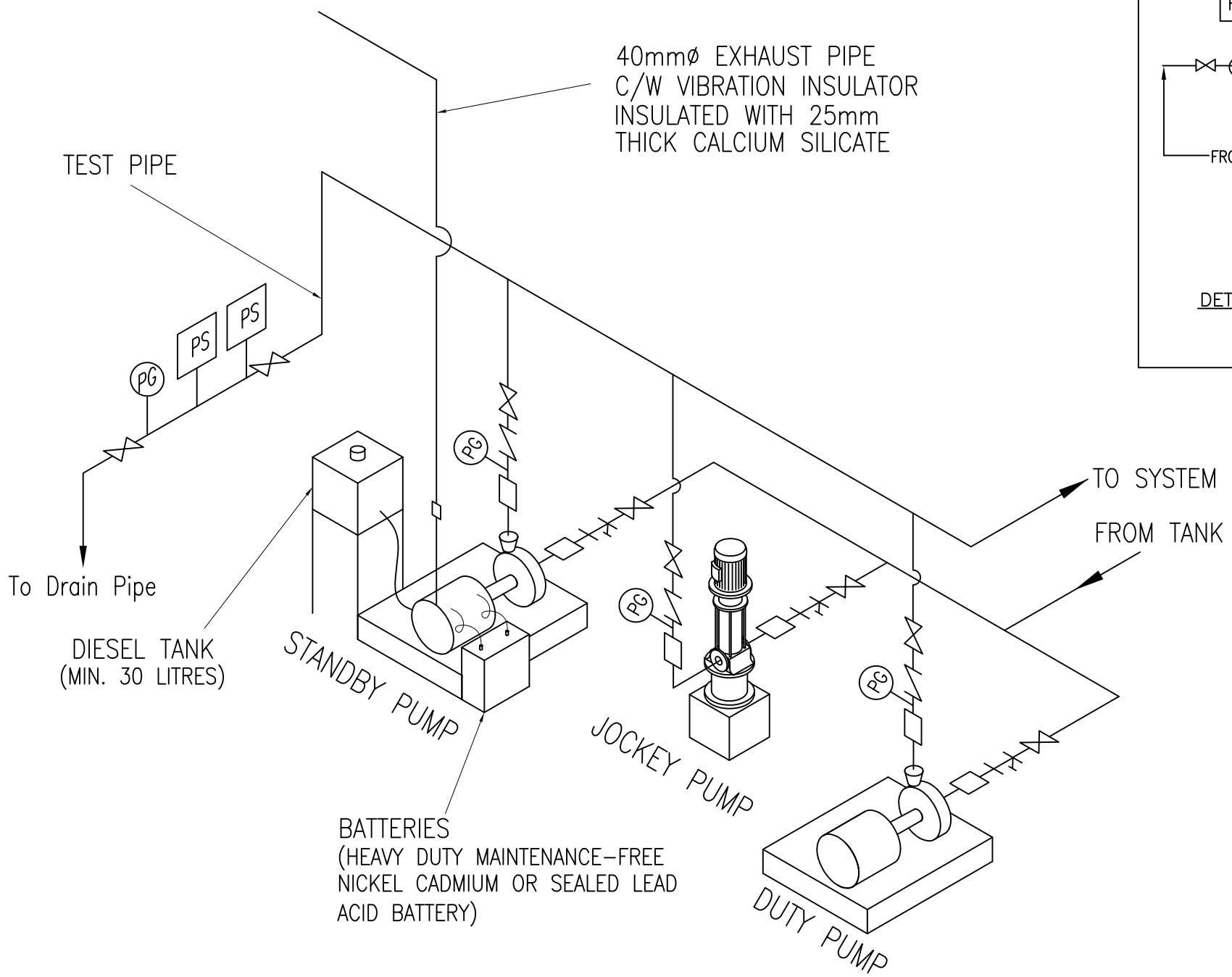

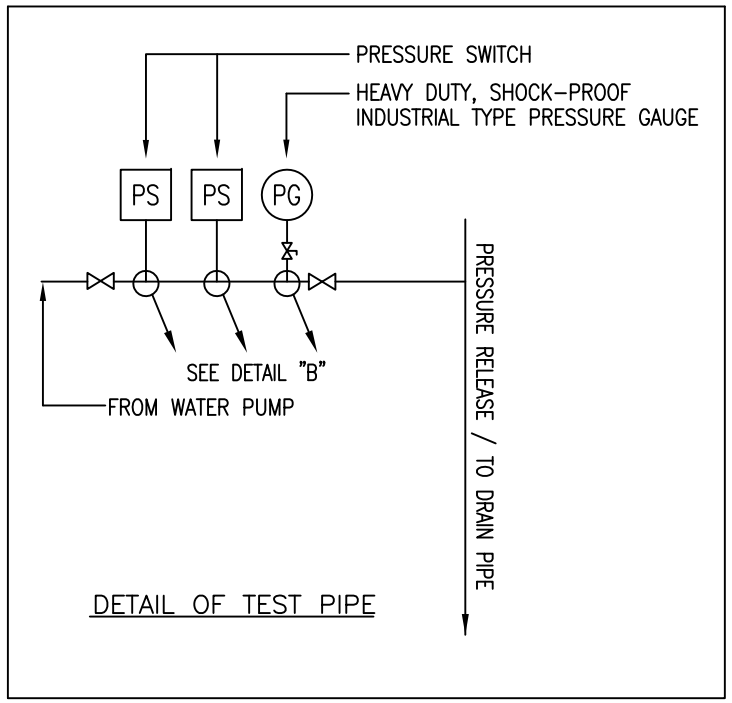

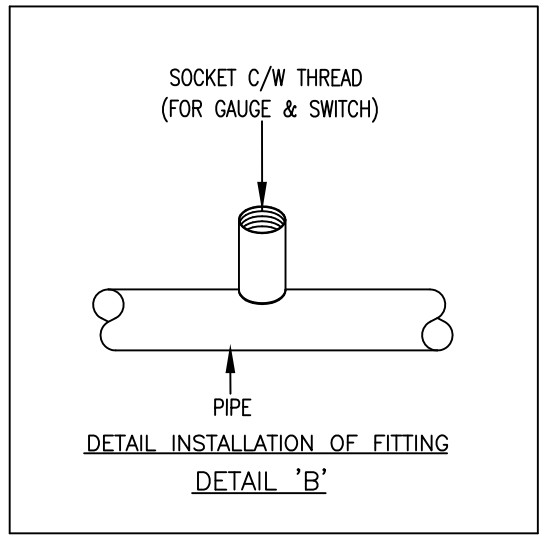

LEGEND

- Flexible Coupling
- Gate Valve
- Check Valve
- Strainer
- PS Pressure Switch
- PG Heavy Duty Pressure Gauge

JKR MEKANIKAL

JASA KEPADA RAKYAT

CAWANGAN KEJURUTERAAN MEKANIKAL
Ibu Pejabat JKR Malaysia

FIRE FIGHTING SYSTEM

DETAIL OF SPRINKLER / WET RISER PUMP
/ PRESSURISED HYDRANT
(DIESEL ENGINE DRIVEN)

DATE	SCALE
2017	NTS

DRAWING NUMBER
CKM/STD/FF/PUMP/REV2017/01

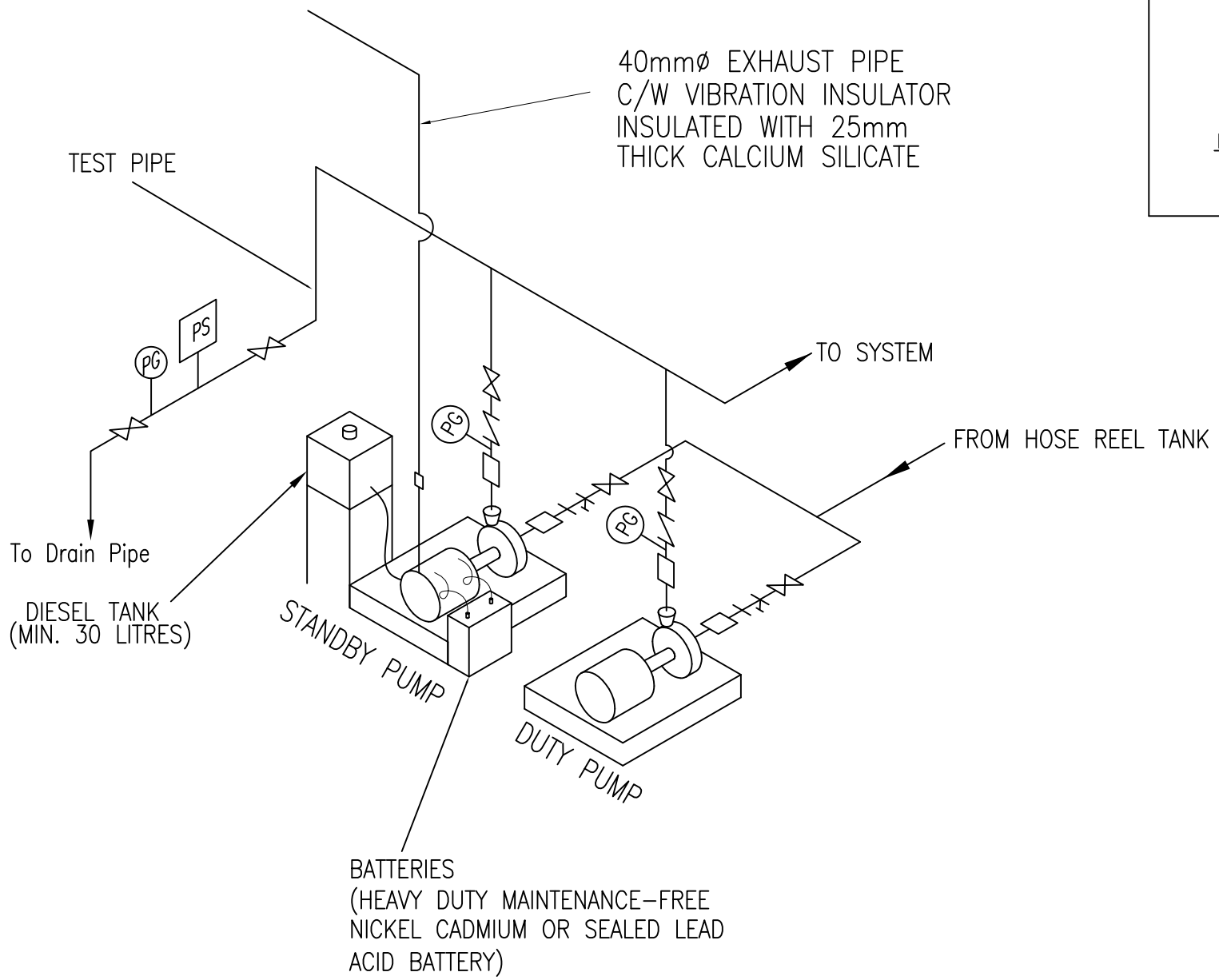

DETAIL OF HOSE REEL PUMP

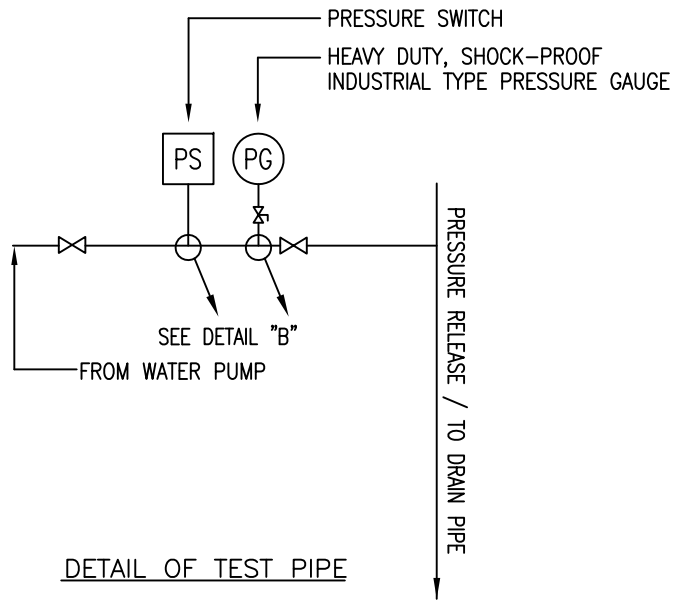

DETAIL OF TEST PIPE

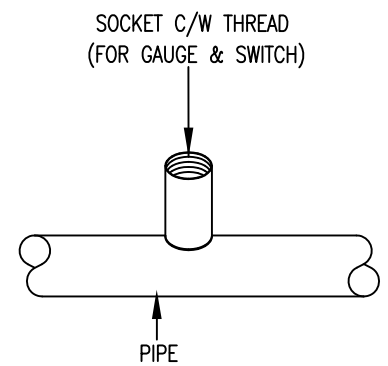

DETAIL INSTALLATION OF FITTING

DETAIL 'B'

LEGEND

- Flexible Coupling
- Gate Valve
- Check Valve
- Strainer
- PS Pressure Switch
- PG Heavy Duty Pressure Gauge

JKR MEKANIKAL

JASA KEPADA RAKYAT

CAWANGAN KEJURUTERAAN MEKANIKAL
Ibu Pejabat JKR Malaysia

FIRE FIGHTING SYSTEM

DETAIL OF HOSE REEL PUMP
(DIESEL ENGINE DRIVEN)

DATE	SCALE
2017	NTS

DRAWING NUMBER
CKM/STD/FF/PUMP/REV2017/02

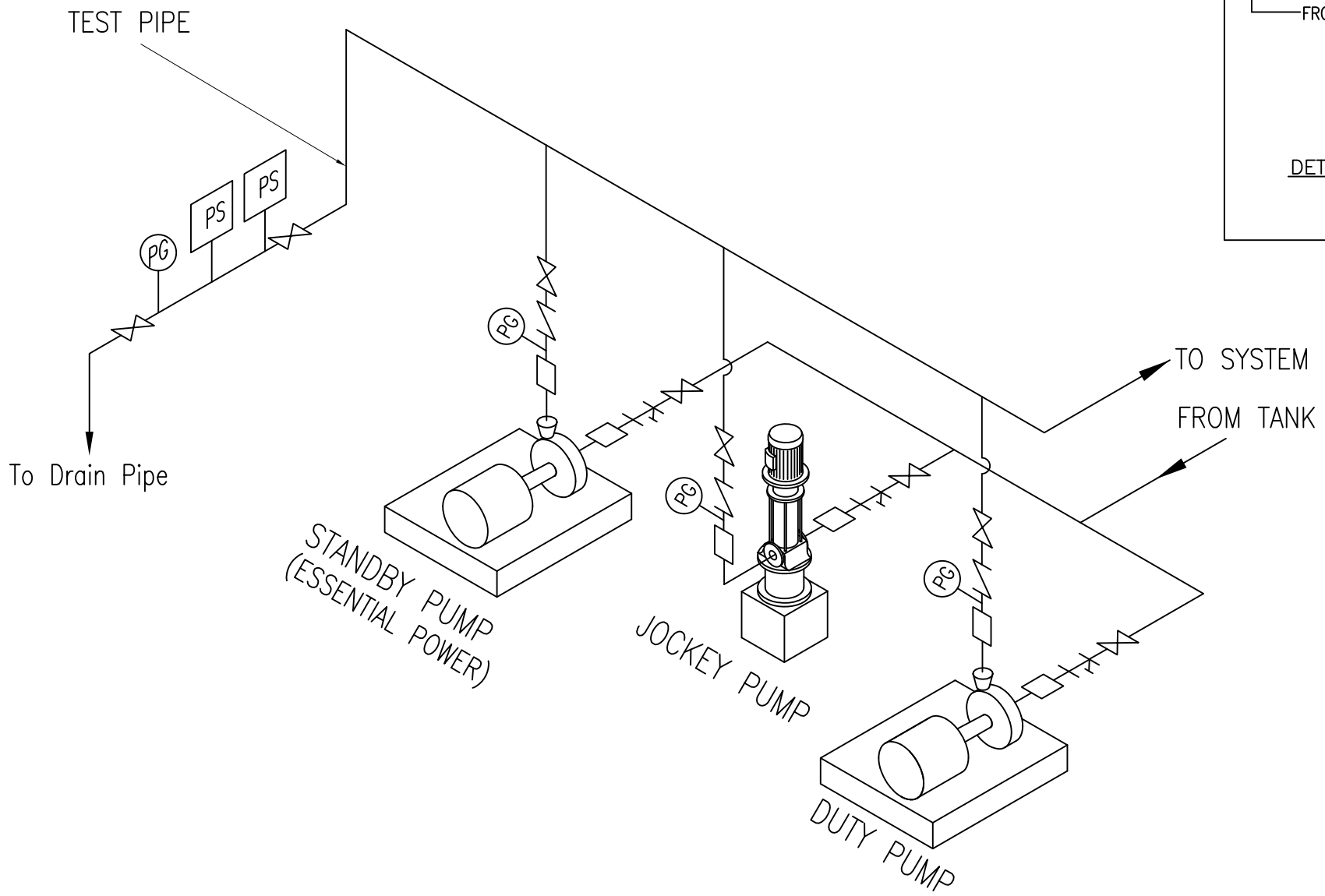

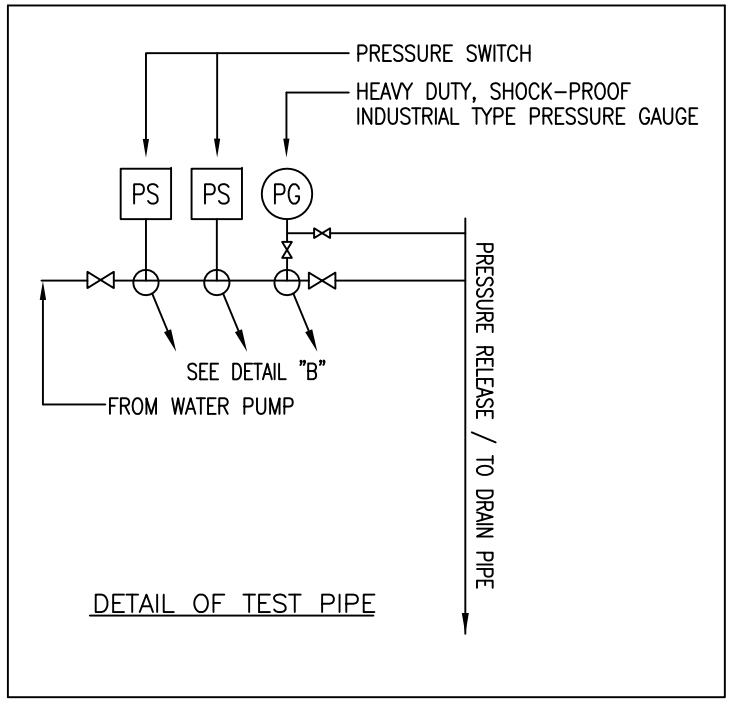

DETAIL OF TEST PIPE

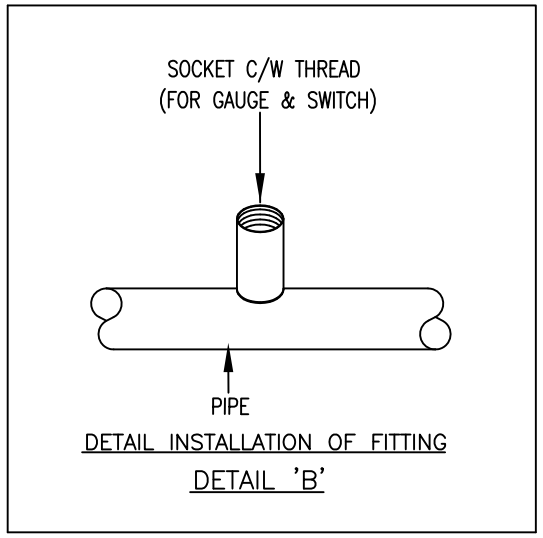

DETAIL INSTALLATION OF FITTING

DETAIL 'B'

LEGEND

- Flexible Coupling
- Gate Valve
- Check Valve
- Strainer
- PS Pressure Switch
- PG Heavy Duty Pressure Gauge

JKR MEKANIKAL

JASA KEPADA RAKYAT

CAWANGAN KEJURUTERAAN MEKANIKAL
Ibu Pejabat JKR Malaysia

FIRE FIGHTING SYSTEM

DETAIL OF SPRINKLER / WET RISER PUMP
/ PRESSURISED HYDRANT
(ELECTRIC DRIVEN - GENSET)

DATE	SCALE
2017	NTS

DRAWING NUMBER

CKM/STD/FF/PUMP/REV2017/03

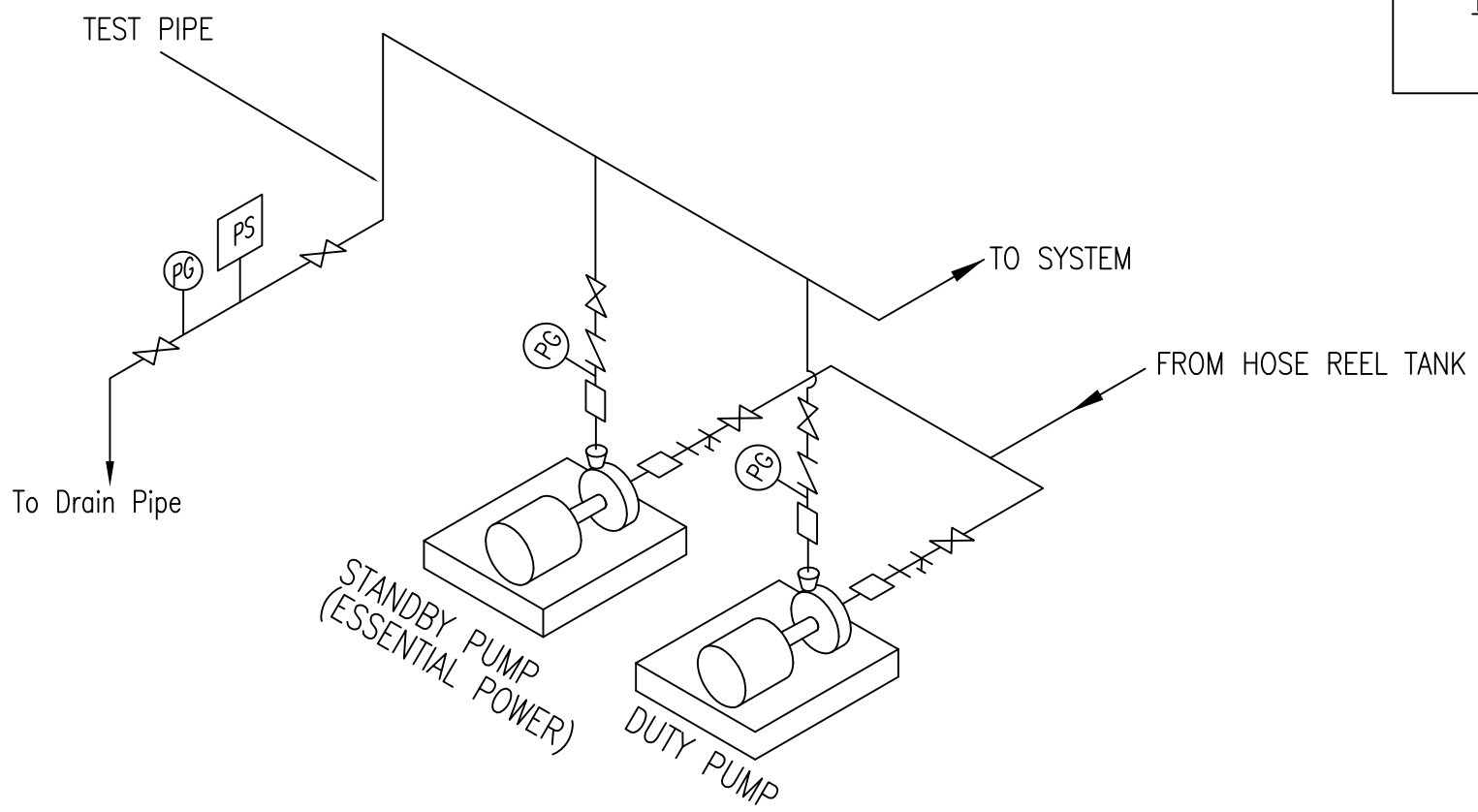

DETAIL OF HOSE REEL PUMP

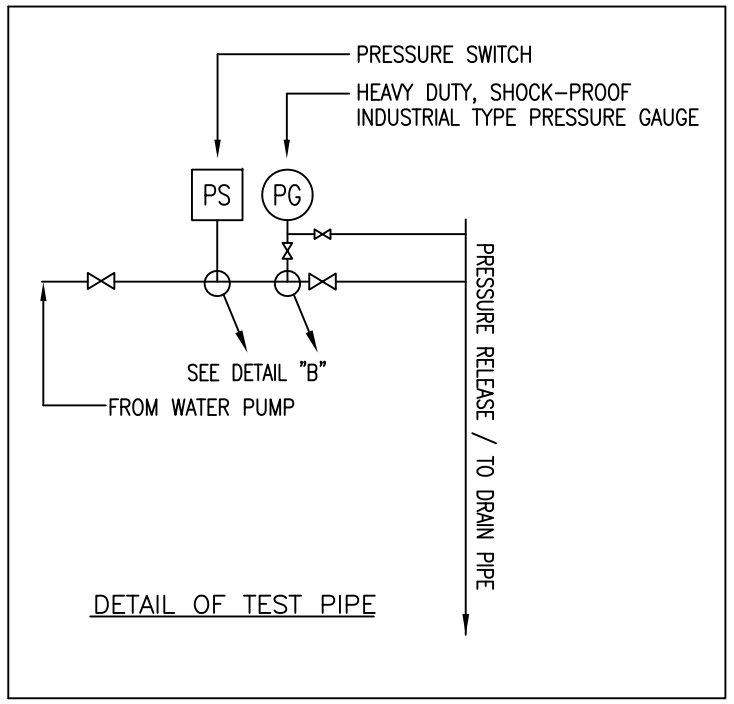

DETAIL OF TEST PIPE

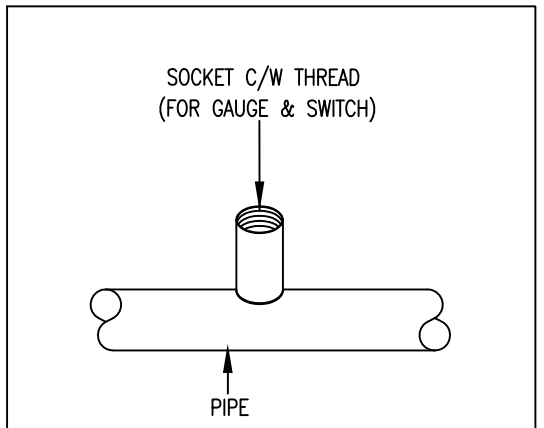

DETAIL INSTALLATION OF FITTING

DETAIL 'B'

LEGEND

- Flexible Coupling
- Gate Valve
- Check Valve
- Strainer
- PS Pressure Switch
- PG Heavy Duty Pressure Gauge

JKR MEKANIKAL

JASA KEPADA RAKYAT

CAWANGAN KEJURUTERAAN MEKANIKAL
Ibu Pejabat JKR Malaysia

FIRE FIGHTING SYSTEM

DETAIL OF HOSE REEL PUMP
(ELECTRIC DRIVEN - GENSET)

DATE	SCALE
2017	NTS

DRAWING NUMBER
CKM/STD/FF/PUMP/REV2017/04

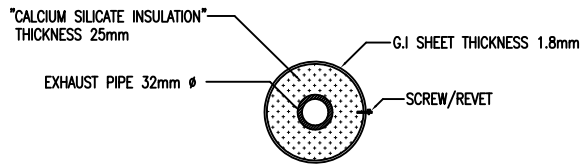

CROSS SECTION OF DIESEL ENGINE EXHAUST PIPE

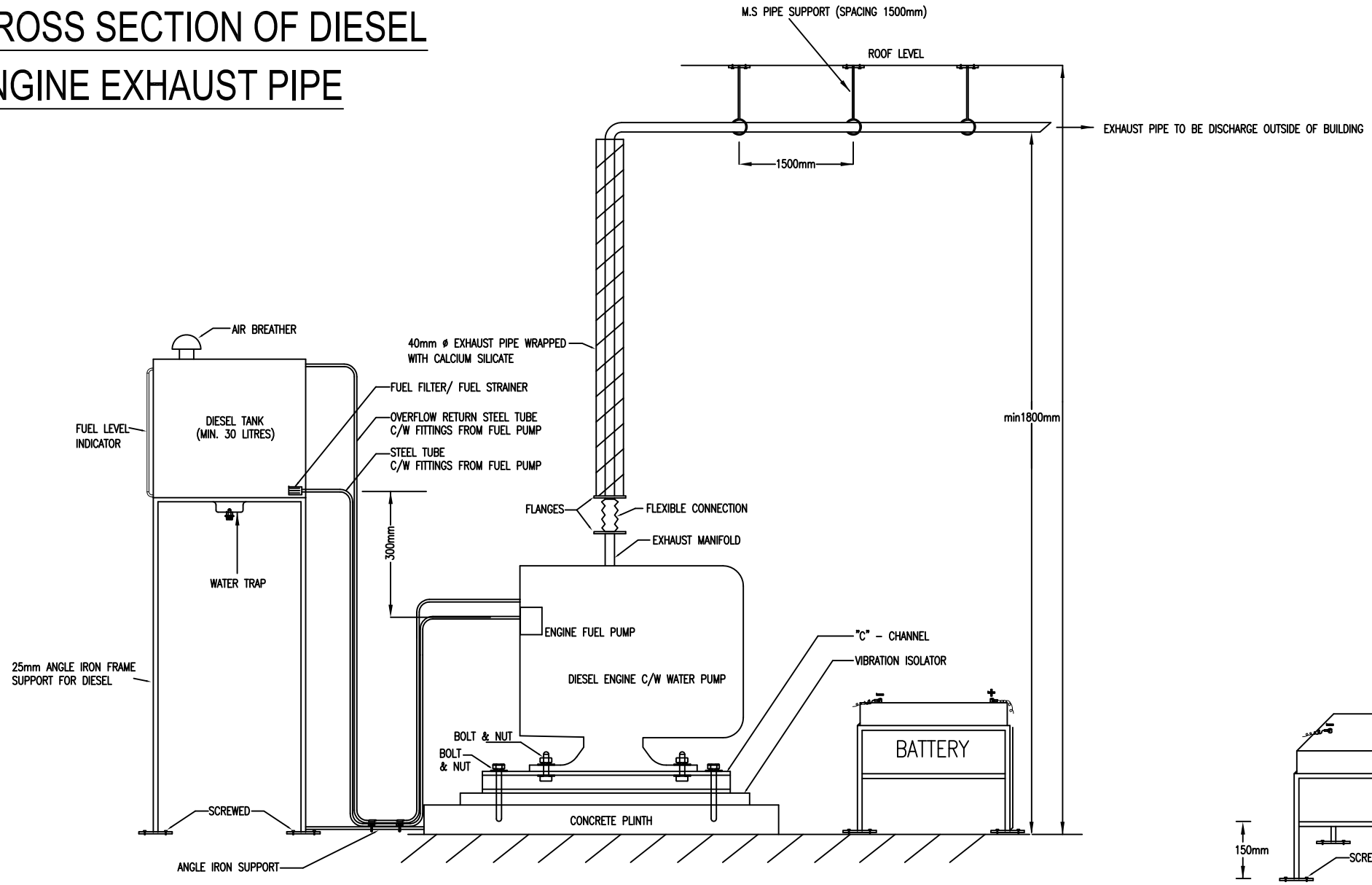

DETAIL OF DIESEL ENGINE EXHAUST PIPE INSULATION

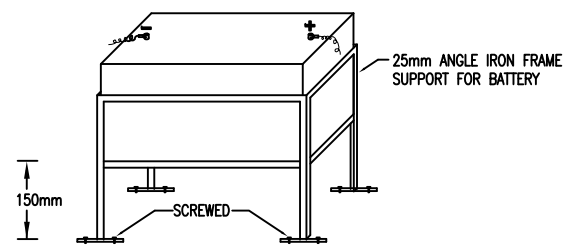

BATTERY FOR DIESEL ENGINE INSTALLATION

JKR
MEKANIKAL

JASA KEPADA RAKYAT

CAWANGAN KEJURUTERAAN MEKANIKAL
Ibu Pejabat JKR Malaysia

FIRE FIGHTING SYSTEM

DETAIL OF DIESEL ENGINE INSTALLATION

DATE	SCALE
2017	NTS

DRAWING NUMBER
CKM/STD/FF/PUMP/REV2017/05

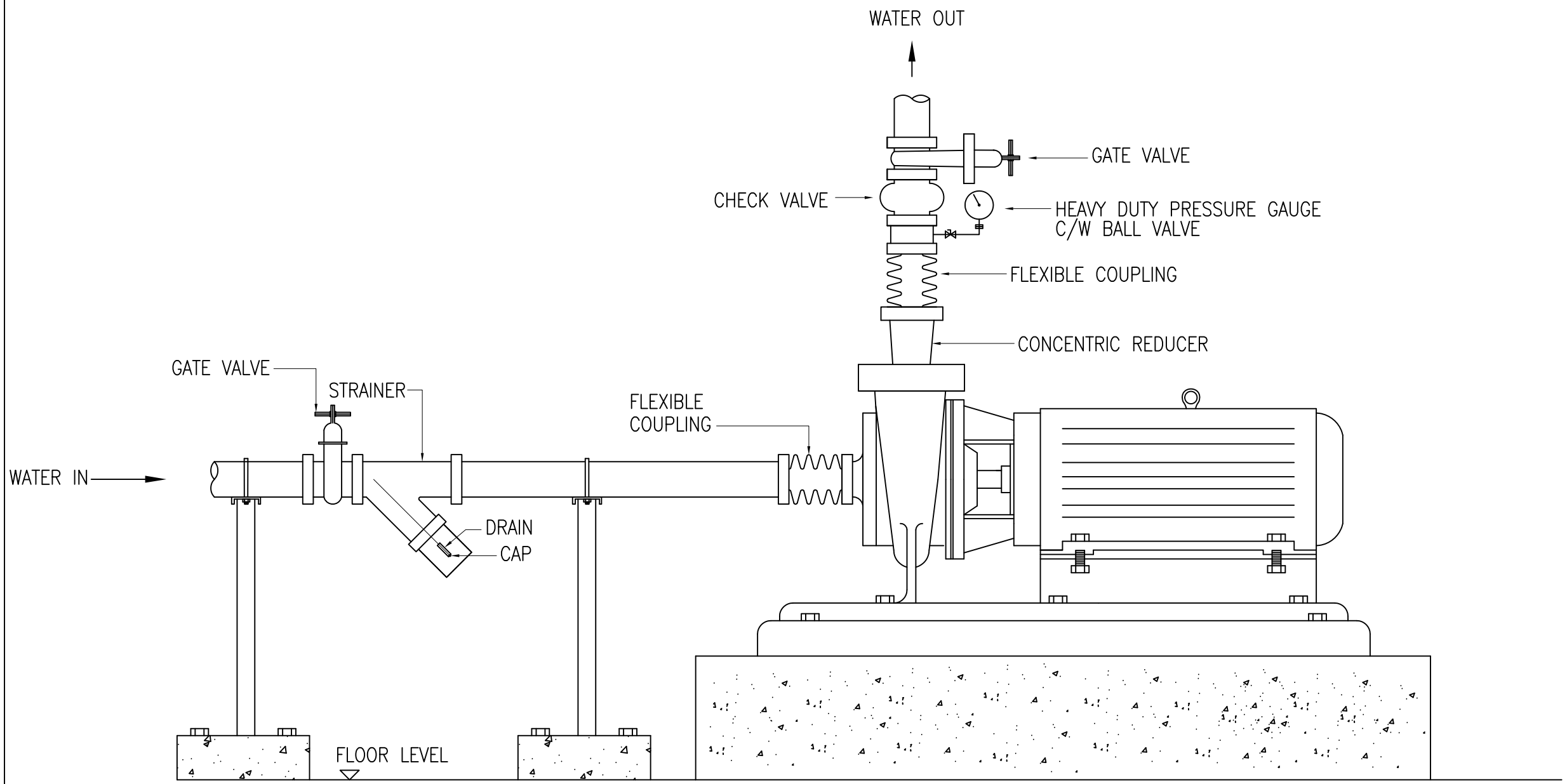

TYPICAL VALVES ARRANGEMENT FOR END SUCTION PUMP

JKR
MEKANIKAL

JASA KEPADA RAKYAT

CAWANGAN KEJURUTERAAN MEKANIKAL
Ibu Pejabat JKR Malaysia

FIRE FIGHTING SYSTEM

TYPICAL VALVE ARRANGEMENT FOR
END SUCTION PUMP

DATE	SCALE
2017	NTS

DRAWING NUMBER
CKM/STD/FF/PUMP/REV2017/06

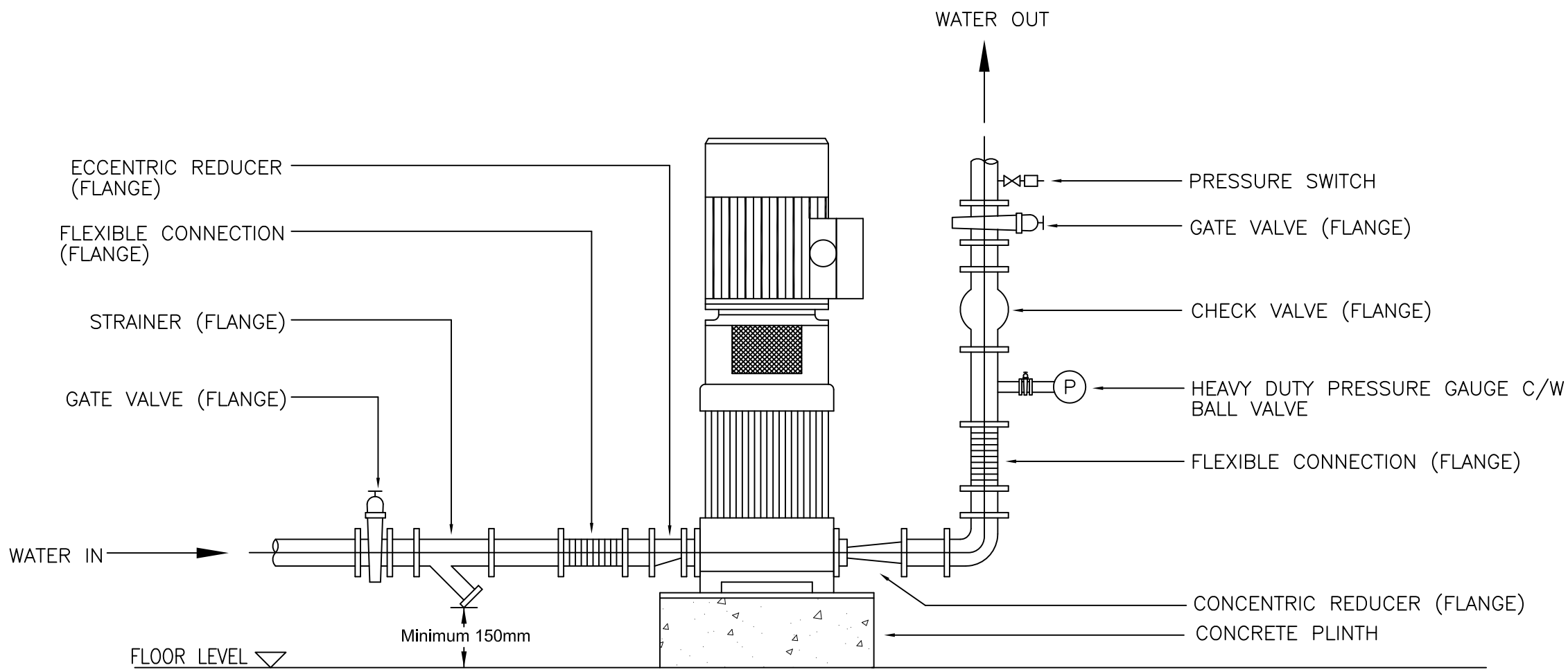

TYPICAL VALVES ARRANGEMENT FOR VERTICAL IN - LINE PUMP

JKR MEKANIKAL

JASA KEPADA RAKYAT

CAWANGAN KEJURUTERAAN MEKANIKAL
Ibu Pejabat JKR Malaysla

FIRE FIGHTING SYSTEM

TYPICAL VALVE ARRANGEMENT FOR VERTICAL IN-LINE PUMP

DATE	SCALE
2017	NTS

DRAWING NUMBER
CKM/STD/FF/PUMP/REV2017/07

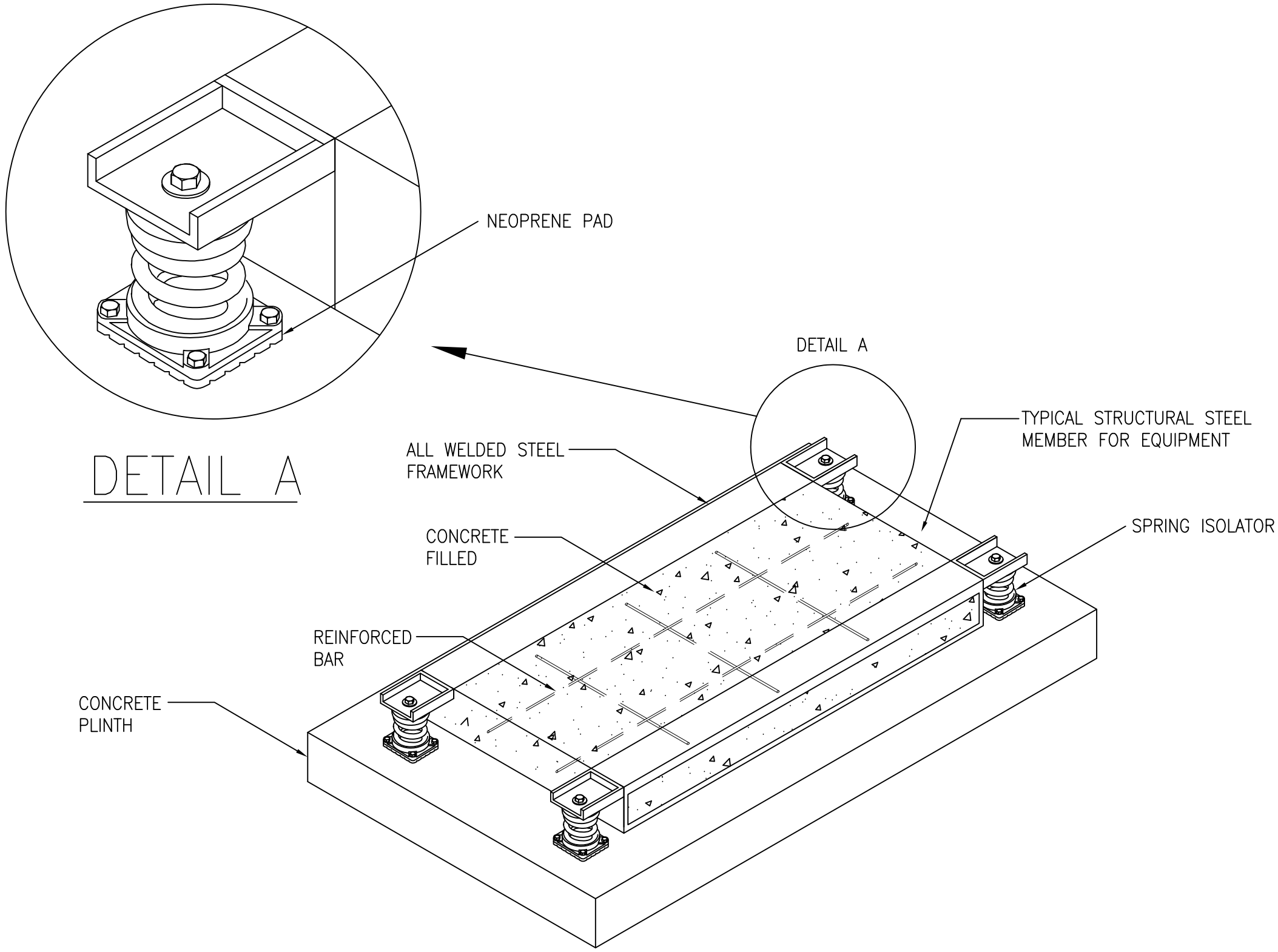

DETAIL OF PUMP AND MOTOR INERTIA BLOCK FOR SPRINKLER AND WET RISER

JKR MEKANIKAL

JASA KEPADA RAKYAT

CAWANGAN KEJURUTERAAN MEKANIKAL
Ibu Pejabat JKR Malaysla

FIRE FIGHTING SYSTEM

DETAIL OF PUMP AND MOTOR INERTIA BLOCK FOR SPRINKLER AND WET RISER

DATE	SCALE
2017	NTS

DRAWING NUMBER

CKM/STD/FF/PUMP/REV2017/08

NOTES:

1) INERTIA BLOCK SIZING, SPRING SELECTIONS AND INSTALLATION SHALL BE MAKE IN ACCORDANCE WITH THE SPECIFICATIONS AND SCHEDULE OF INSTALLATION EQUIPMENT.

2) INERTIA BLOCK SHALL BE SIZED (IN PLAN) TO SUPPORT THE WEIGHT OF PUMP AND PIPEWORK UP TO AND INCLUDING THE PIPE ELBOWS.

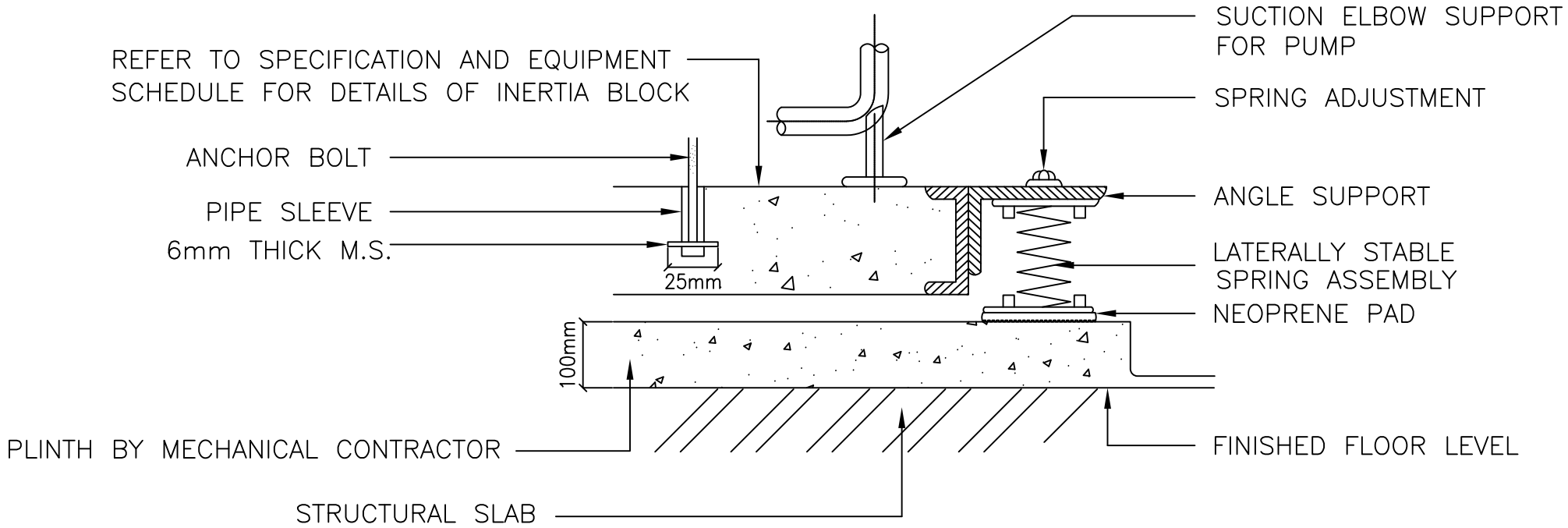

DETAIL OF PLINTH AND INERTIA BLOCK ANTI-VIBRATION MOUNTING FOR PUMP INSTALLATION FOR SPRINKLER AND WET RISER

JASA KEPADA RAKYAT

CAWANGAN KEJURUTERAAN MEKANIKAL
Ibu Pejabat JKR Malaysia

FIRE FIGHTING SYSTEM

DETAIL OF PLINTH AND INERTIA BLOCK FOR PUMP INSTALLATION FOR SPRINKLER AND WET RISER

DATE	SCALE
2017	NTS

DRAWING NUMBER
CKM/STD/FF/PUMP/REV2017/09

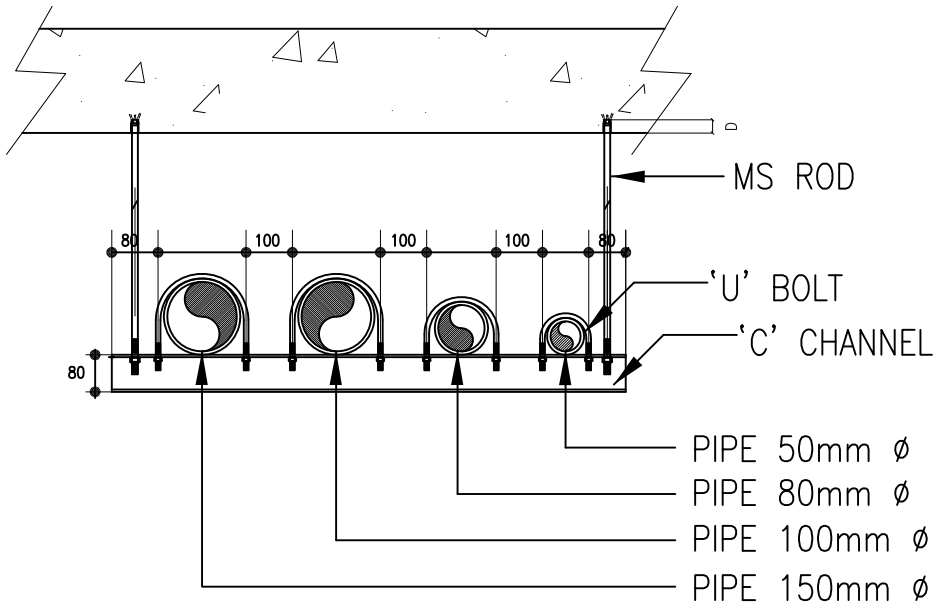

TYPICAL PIPE ARRANGEMENT AND SUPPORT

ANCHORING

PIPE SIZES (Diameter)	ROD SIZE	ANCHOR SIZE	HOLE DIAMETER	ANCHOR LENGTH	HOLE DEPTH (D)
20mm - 40mm	6 mm	10 mm	10 mm	25 mm	25 mm
50mm - 150mm	9 mm	13 mm	13 mm	40 mm	40 mm

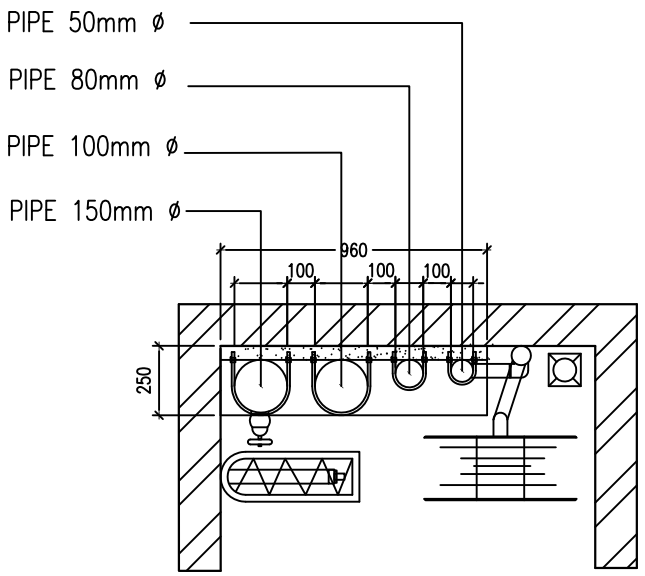

PLAN VIEW

TYPICAL ARRANGEMENT PIPE IN RISER FOR FIRE FIGTHING SYSTEM

JASA KEPADA RAKYAT

CAWANGAN KEJURUTERAAN MEKANIKAL
Ibu Pejabat JKR Malaysia

FIRE FIGHTING SYSTEM

TYPICAL ARRANGEMENT PIPE IN RISER

DATE	SCALE
2017	NTS

DRAWING NUMBER
CKM/STD/FF/PIPE/REV2017/01

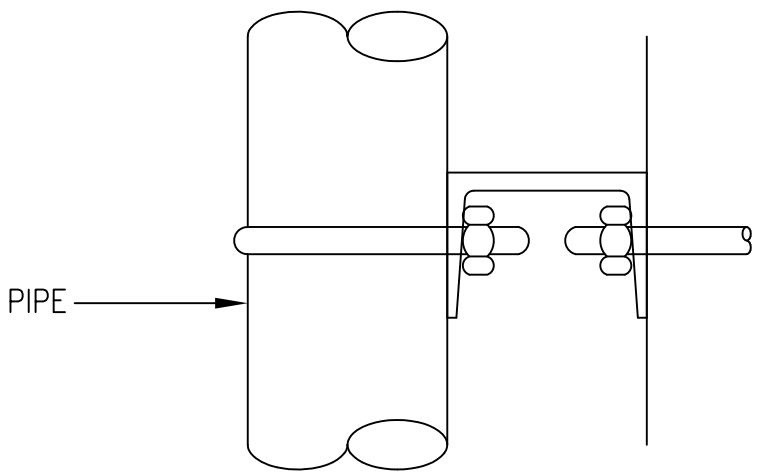

SIDE VIEW

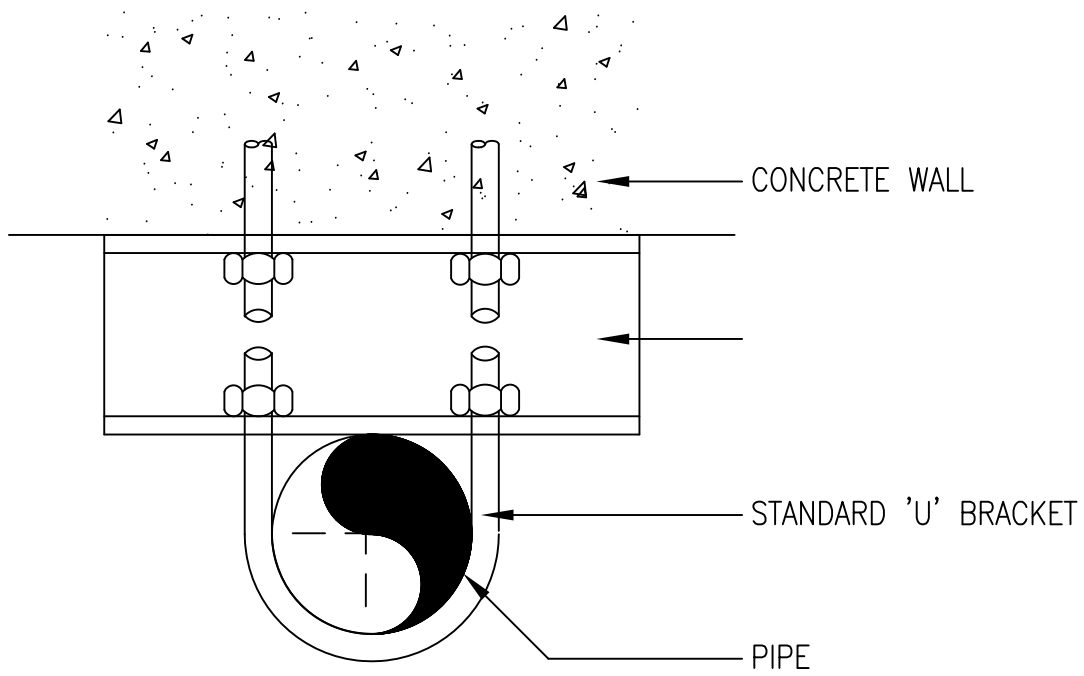

FRONT VIEW

TYPICAL BRACKETS FOR VERTICAL PIPES AT WALL

JASA KEPADA RAKYAT

CAWANGAN KEJURUTERAAN MEKANIKAL
Ibu Pejabat JKR Malaysia

FIRE FIGHTING SYSTEM

TYPICAL BRACKETS FOR VERTICAL PIPES AT WALL

DATE	SCALE
2017	NTS

DRAWING NUMBER
CKM/STD/FF/PIPE/REV2017/02

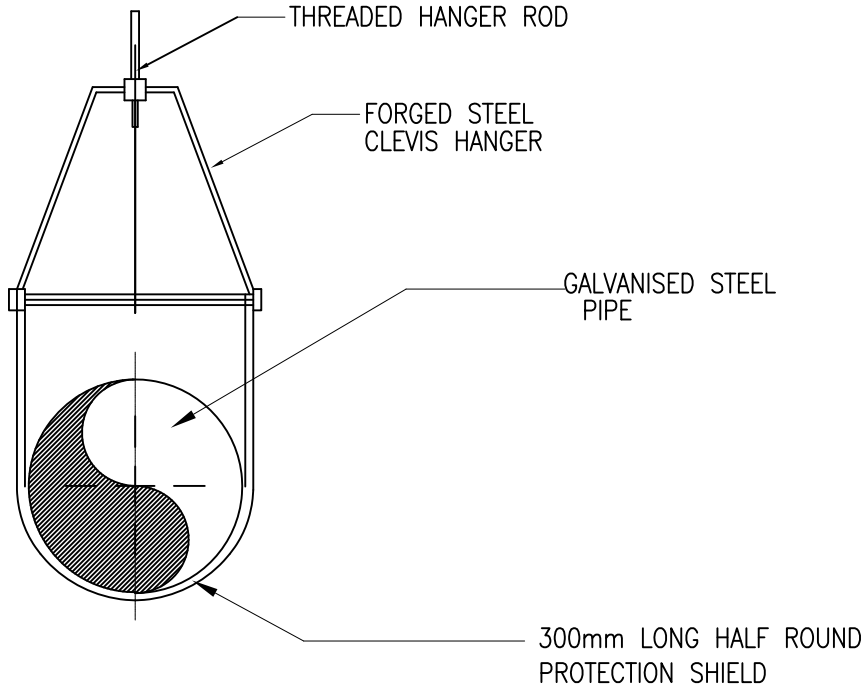

PIPE HANGER (SINGLE PIPES)–CLEVIS TYPE
PIPE SIZE 125mm & ABOVE

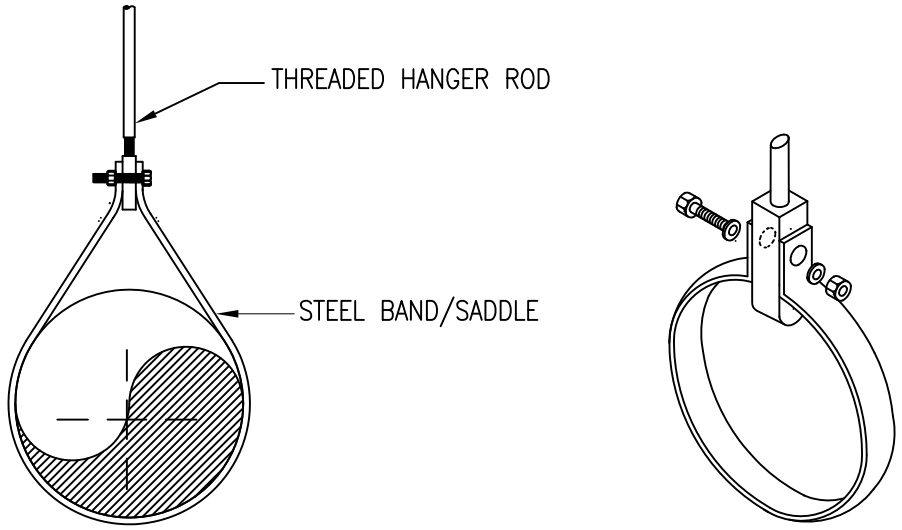

PIPE HANGER (SINGLE PIPE) – BAND TYPE
PIPE SIZE 100mm & BELOW

DETAIL TYPES OF PIPE HANGER

JKR
MEKANIKAL

JASA KEPADA RAKYAT

CAWANGAN KEJURUTERAAN MEKANIKAL
Ibu Pejabat JKR Malaysia

FIRE FIGHTING SYSTEM

DETAIL TYPES OF PIPE HANGER

DATE	SCALE
2017	NTS

DRAWING NUMBER
CKM/STD/FF/PIPE/REV2017/03

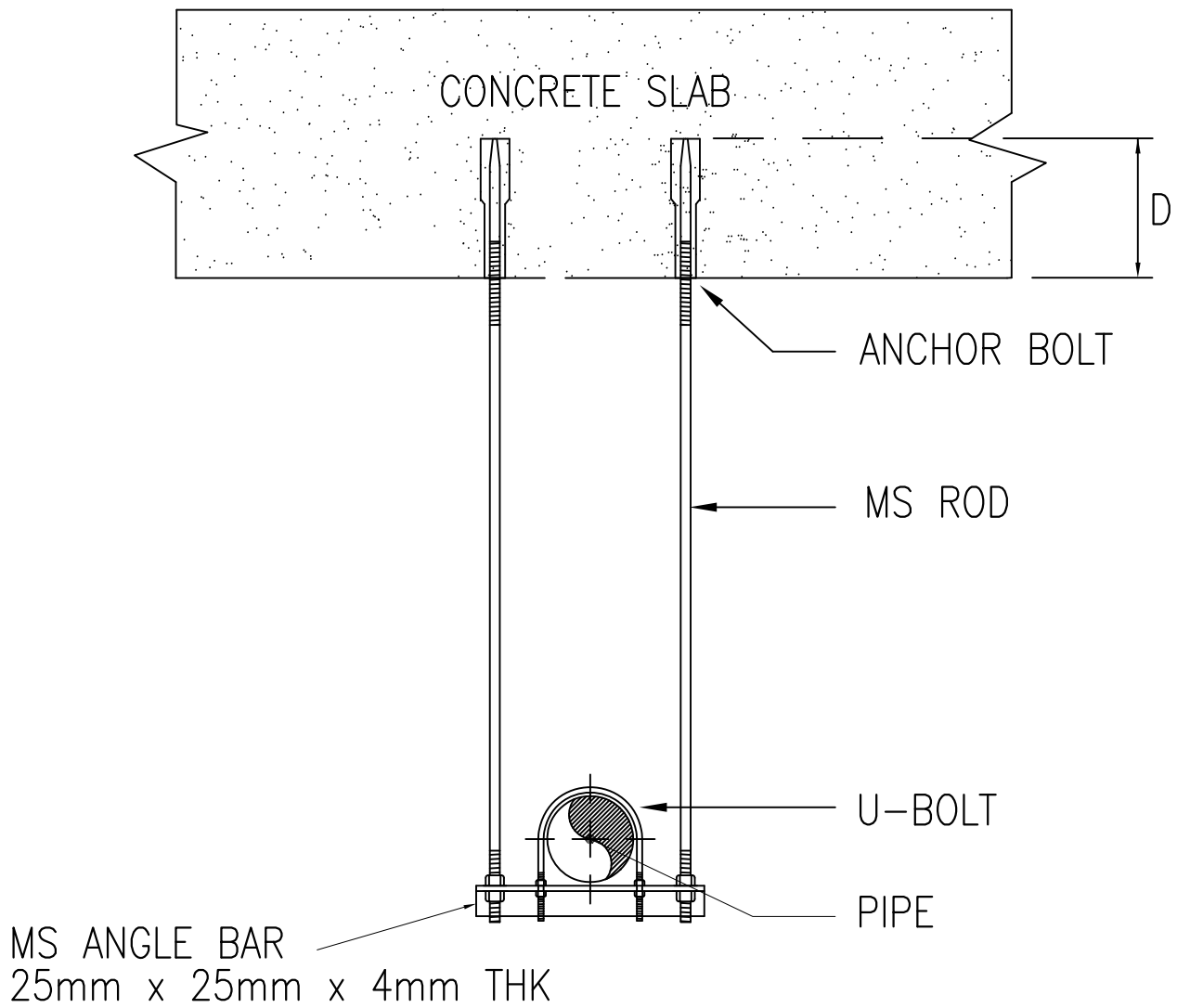

PIPE SIZES (Diameter)	ANCHOR & ROD SIZE	HOLE DIAMETER	HOLE DEPTH (D)
25mm - 50mm	6 mm	8 mm	25 mm
65mm - 150mm	9 mm	12 mm	40 mm

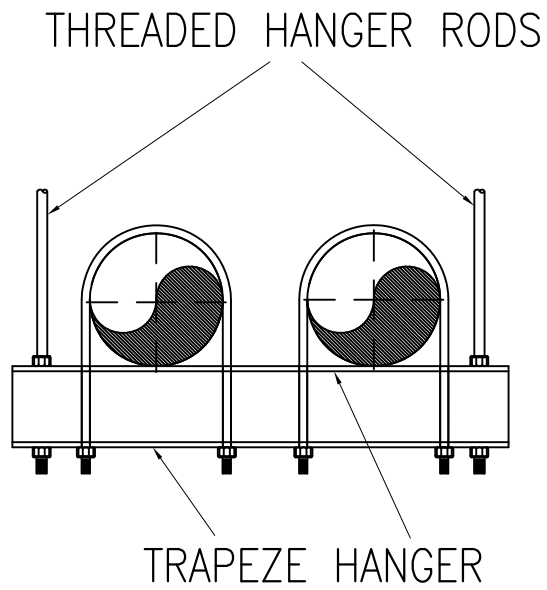

DETAIL OF PIPE HANGERS

JKR MEKANIKAL

JASA KEPADA RAKYAT

CAWANGAN KEJURUTERAAN MEKANIKAL
Ibu Pejabat JKR Malaysia

FIRE FIGHTING SYSTEM

DETAIL OF PIPE HANGERS

DATE	SCALE
2017	NTS

DRAWING NUMBER
CKM/STD/FF/PIPE/REV2017/04

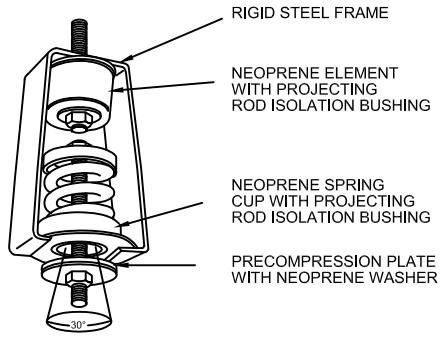

SPRING ISOLATOR SHALL BE INSTALLED AT FIRST THREE HANGER ROD (REFER TECHNICAL SPECIFICATION)

DETAIL 'A'

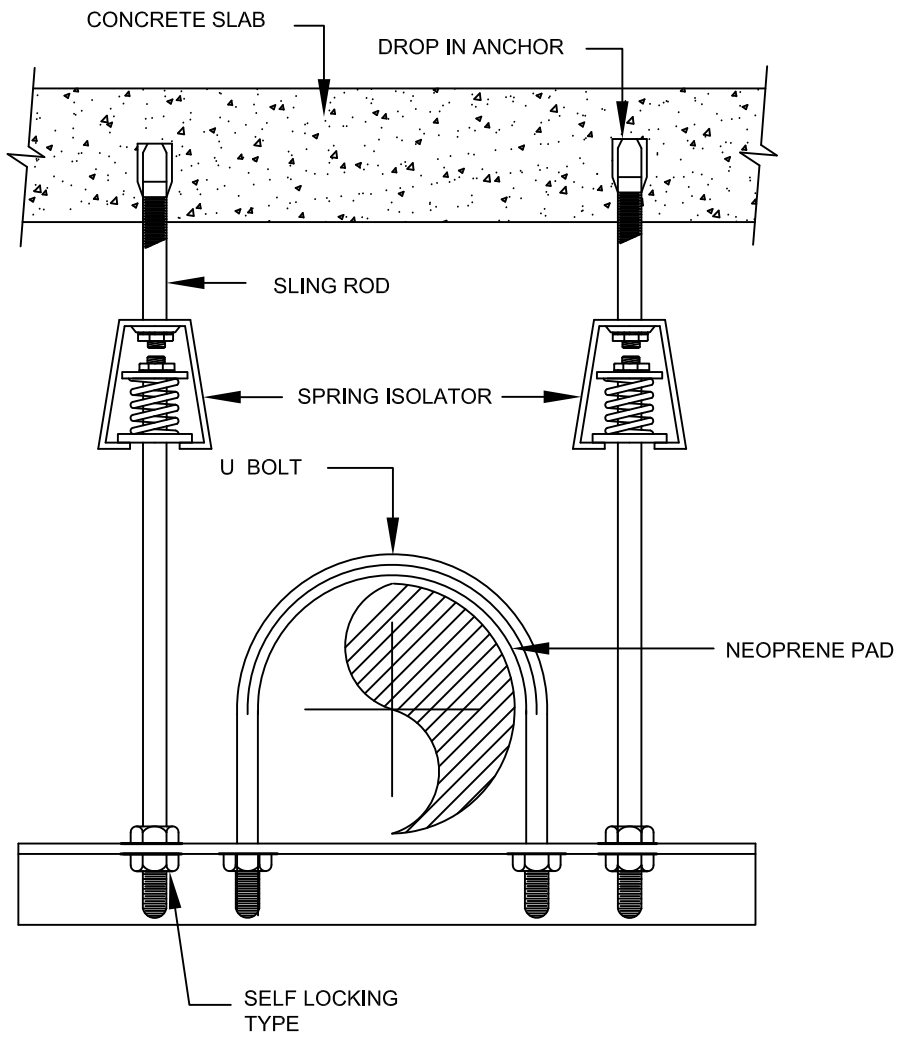

TYPICAL PIPE HANGER (SINGLE PIPE)

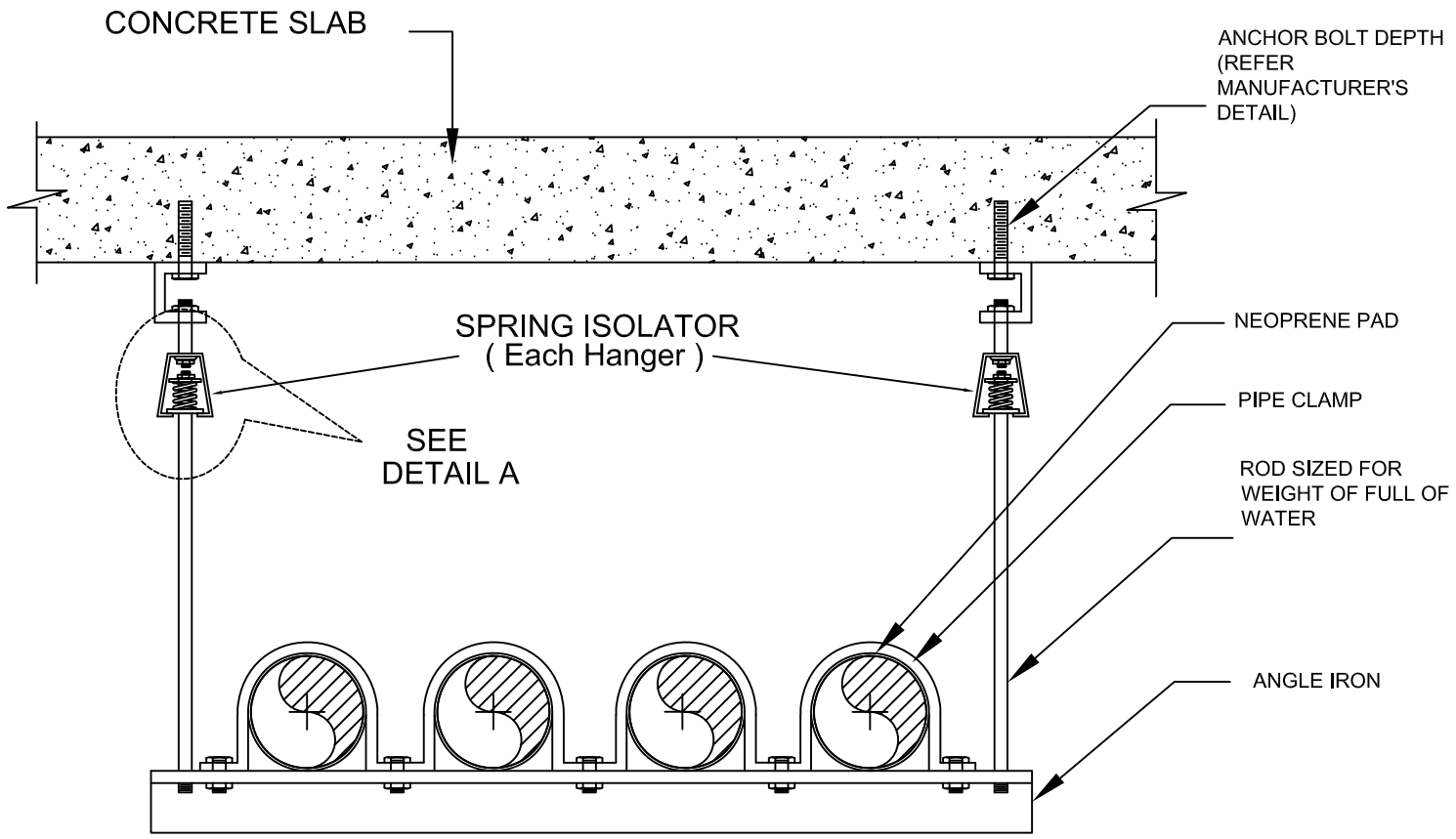

TYPICAL PIPE HANGER (MORE THAN ONE PIPE)

TYPICAL PIPE HANGER FOR SPRINKLER AND WET RISER AT PLANT ROOM

JKR MEKANIKAL

JASA KEPADA RAKYAT

CAWANGAN KEJURUTERAAN MEKANIKAL
Ibu Pejabat JKR Malaysia

FIRE FIGHTING SYSTEM

TYPICAL PIPE HANGERS (PLANT ROOM) SPRINKLER AND WET RISER

DATE	SCALE
2017	NTS

DRAWING NUMBER

CKM/STD/FF/PIPE/REV2017/05

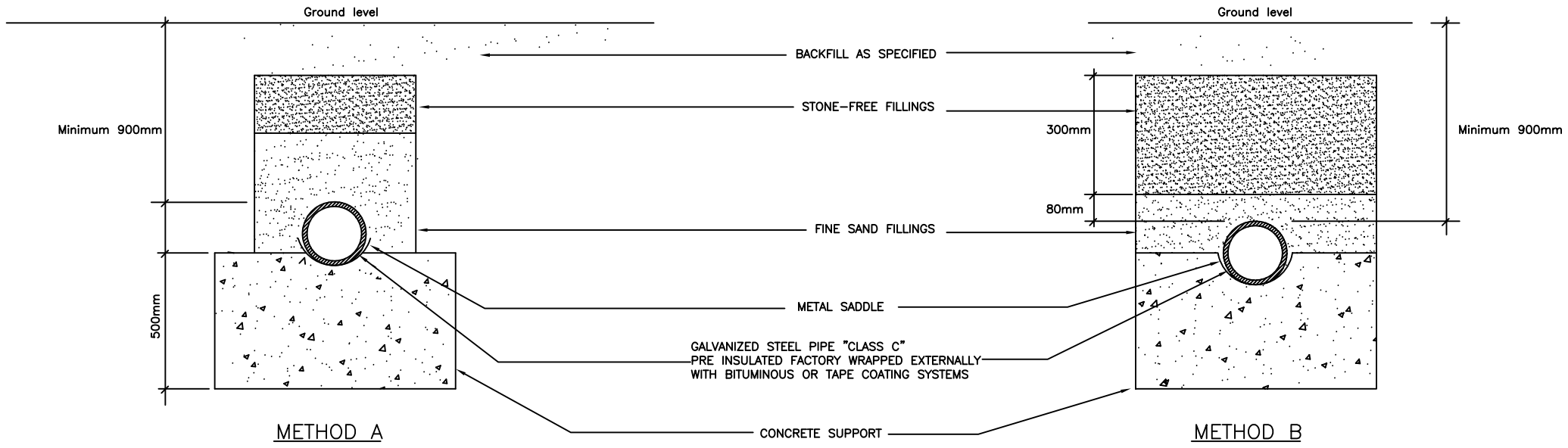

CROSS–SECTION

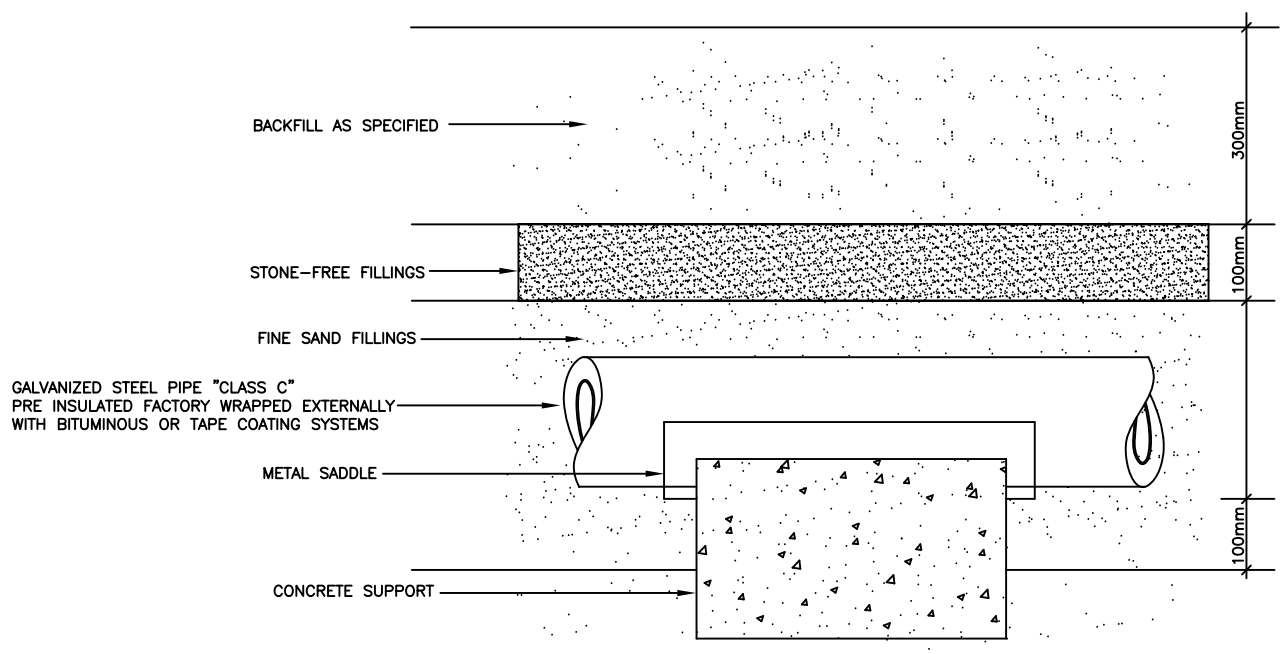

LONGITUDINAL

DETAIL OF UNDERGROUND PIPING INSTALLATION

JASA KEPADA RAKYAT

CAWANGAN KEJURUTERAAN MEKANIKAL
Ibu Pejabat JKR Malaysia

FIRE FIGHTING SYSTEM

DETAIL OF UNDERGROUND PIPING INSTALLATION

DATE	SCALE
2017	NTS

DRAWING NUMBER
CKM/STD/FF/PIPE/REV2017/06

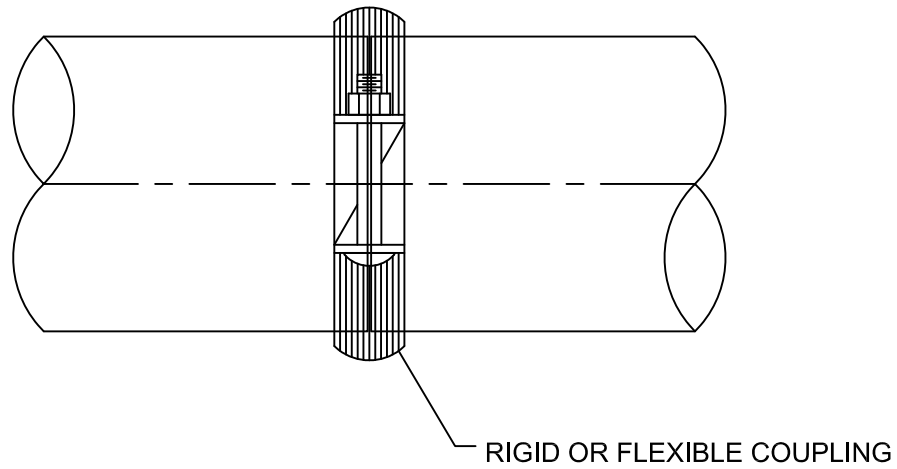

Pipe Jointing for 65 mm Diameter and Above

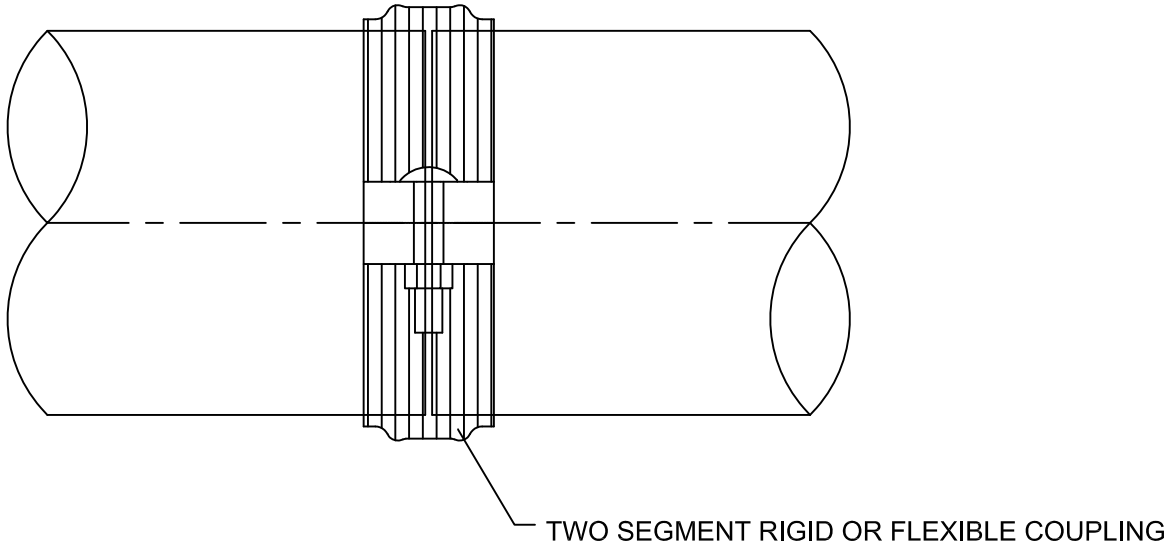

Pipe Jointing for 65 mm Diameter and Above

DETAIL PIPE MECHANICAL JOINT COUPLING FOR SPRINKLER, WET RISER AND DRY RISER

JASA KEPADA RAKYAT

CAWANGAN KEJURUTERAAN MEKANIKAL
Ibu Pejabat JKR Malaysia

FIRE FIGHTING SYSTEM

PIPE MECHANICAL JOINT COUPLING FOR SPRINKLER, WET RISER AND DRY RISER

DATE	SCALE
2017	NTS

DRAWING NUMBER
CKM/STD/FF/PIPE/REV2017/07

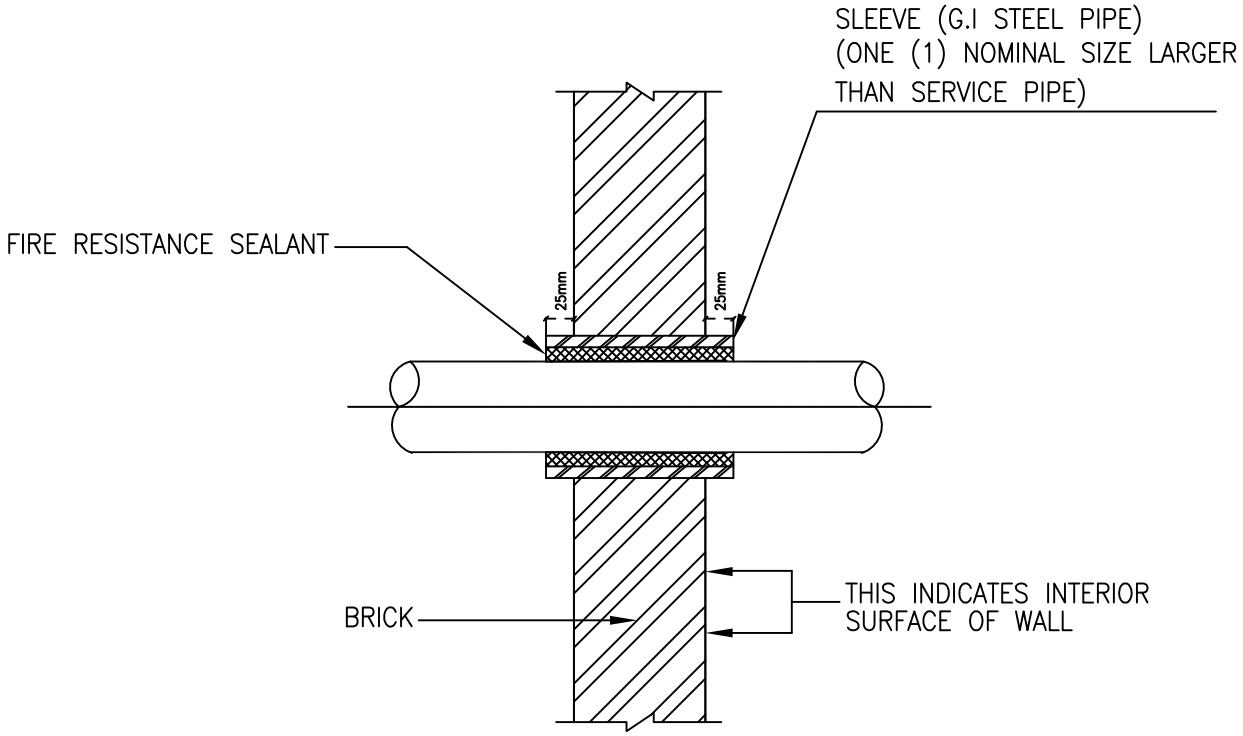

PIPE SLEEVE FOR PIPE THROUGH WALL

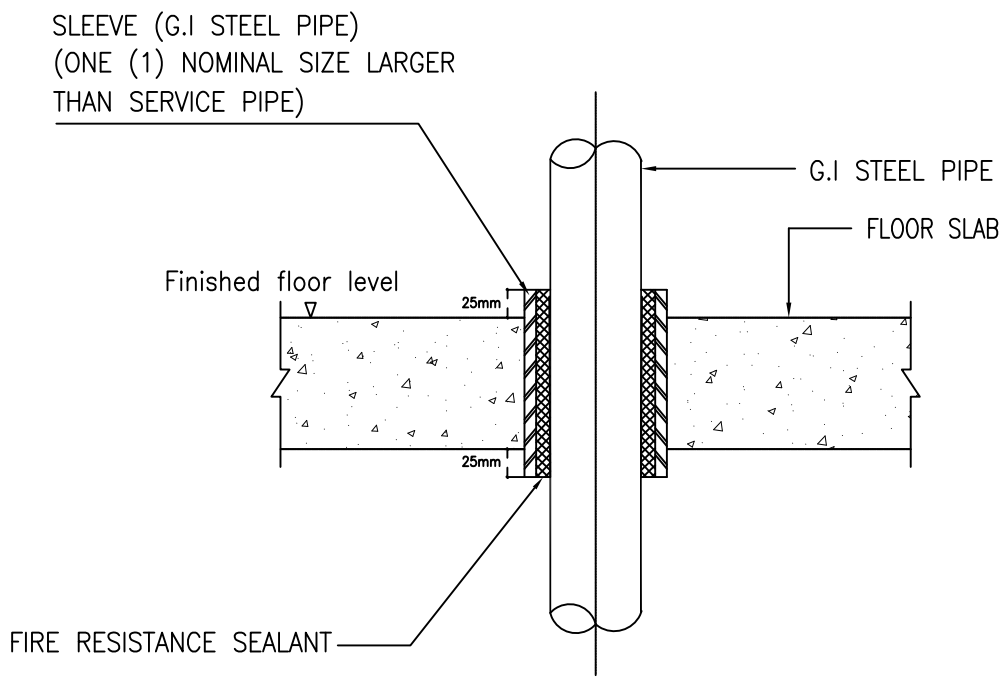

Notes:
1. Normal floor–the sleeves shall end 25mm above finished floor level.
2. Wet floor–the sleeves shall end 50mm above finished floor level.

PIPE SLEEVE FOR PIPE THROUGH FLOOR

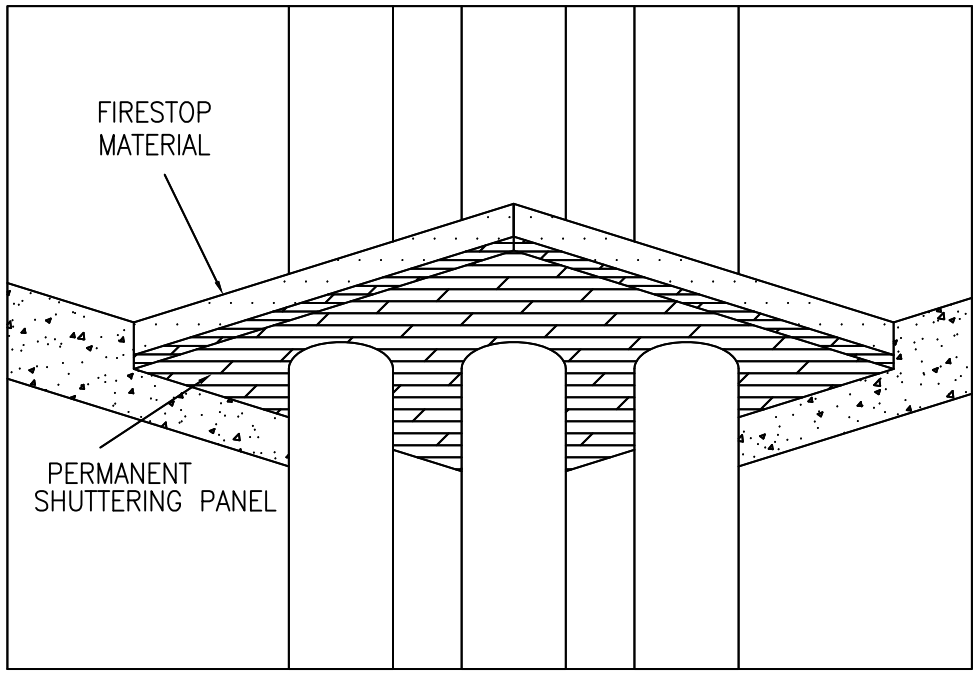

PIPE THROUGH FLOOR WITHOUT SLEEVE

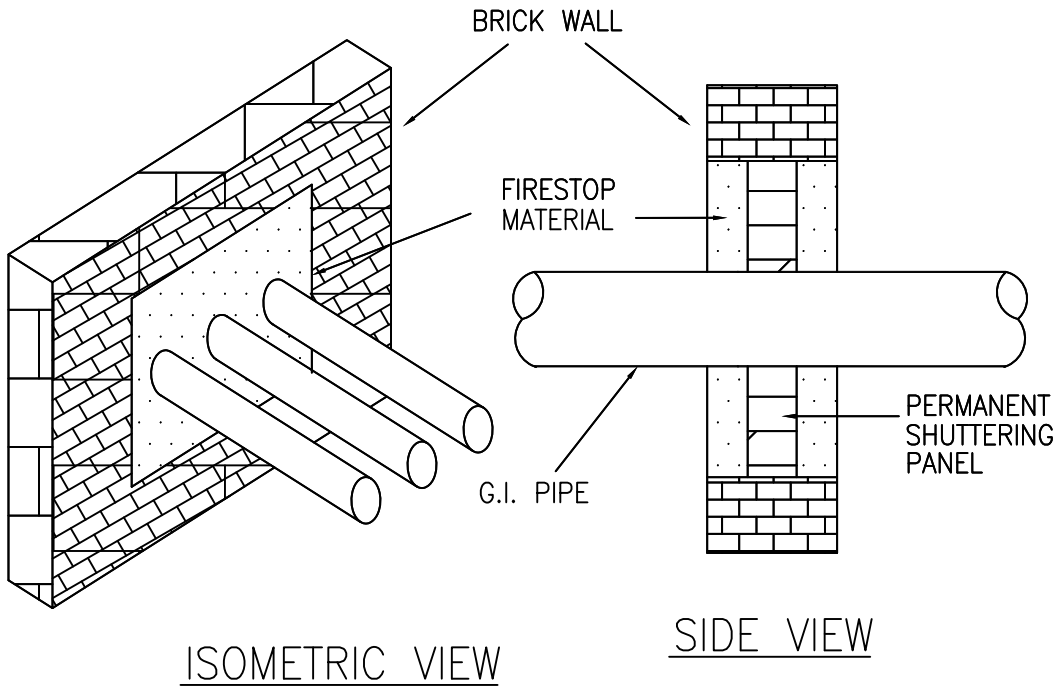

PIPE THROUGH WALL WITHOUT SLEEVE

JKR MEKANIKAL

JASA KEPADA RAKYAT

CAWANGAN KEJURUTERAAN MEKANIKAL
Ibu Pejabat JKR Malaysia

FIRE FIGHTING SYSTEM

DETAIL OF PIPES THROUGH WALLS AND FLOORS

DATE	SCALE
2017	NTS

DRAWING NUMBER
CKM/STD/FF/PIPE/REV2017/08

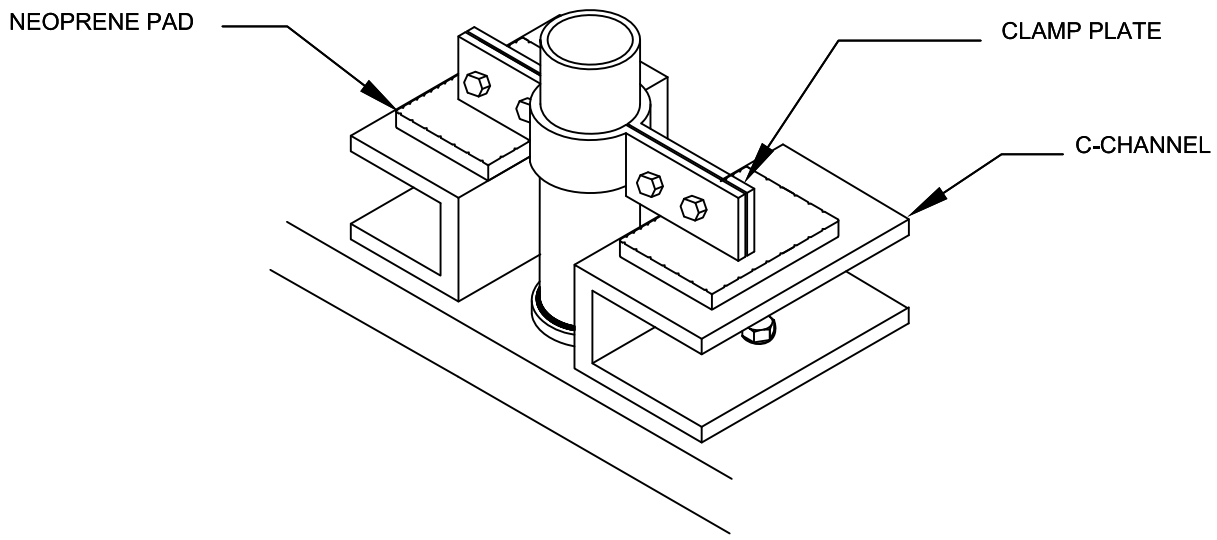

ISOMETRIC VIEW

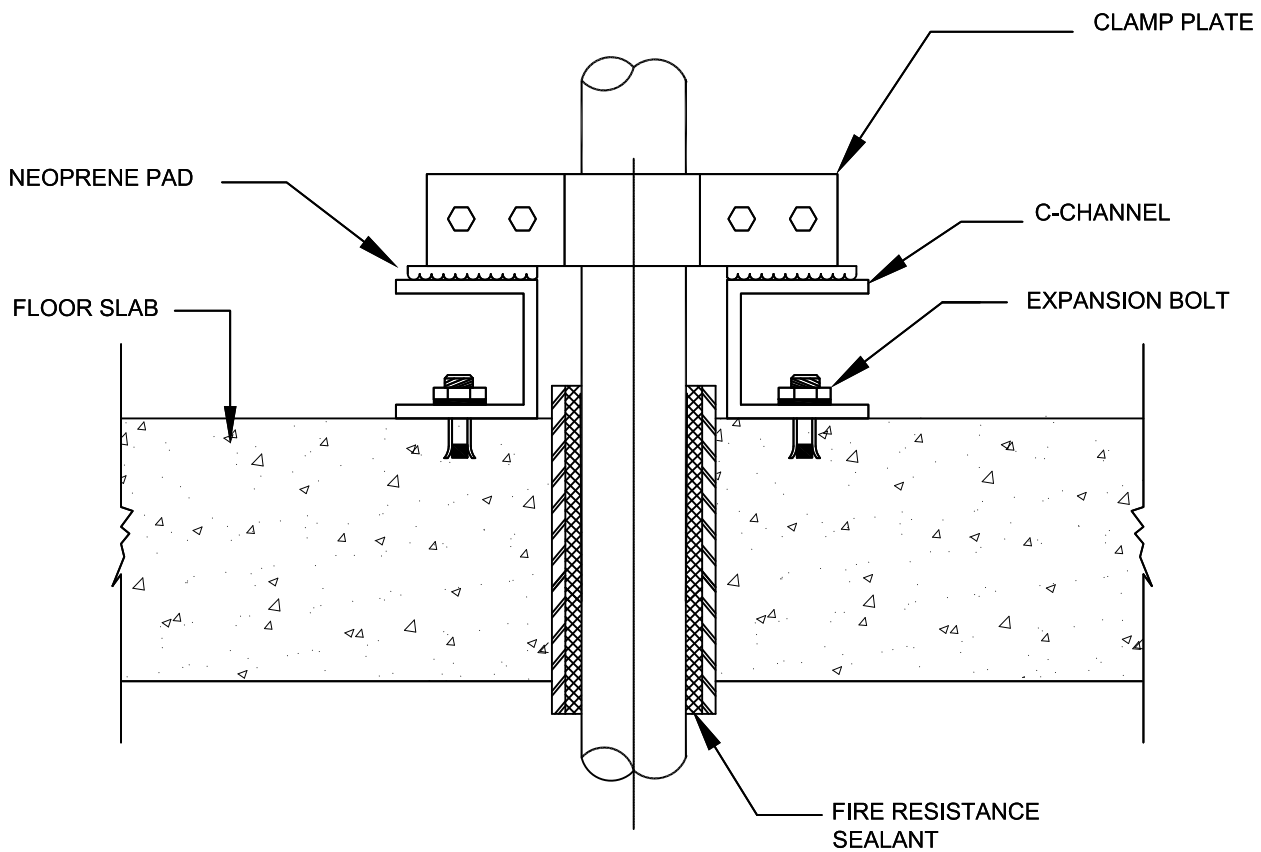

TYPICAL VERTICAL PIPE RISER THROUGH FLOOR SLAB MOUNTING FOR SPRINKLER AND WET RISER

JASA KEPADA RAKYAT

CAWANGAN KEJURUTERAAN MEKANIKAL
Ibu Pejabat JKR Malaysia

FIRE FIGHTING SYSTEM

TYPICAL VERTICAL PIPE RISER THROUGH FLOOR SLAB MOUNTING FOR SPRINKLER AND WET RISER

DATE	SCALE
2017	NTS

DRAWING NUMBER
CKM/STD/FF/PIPE/REV2017/09

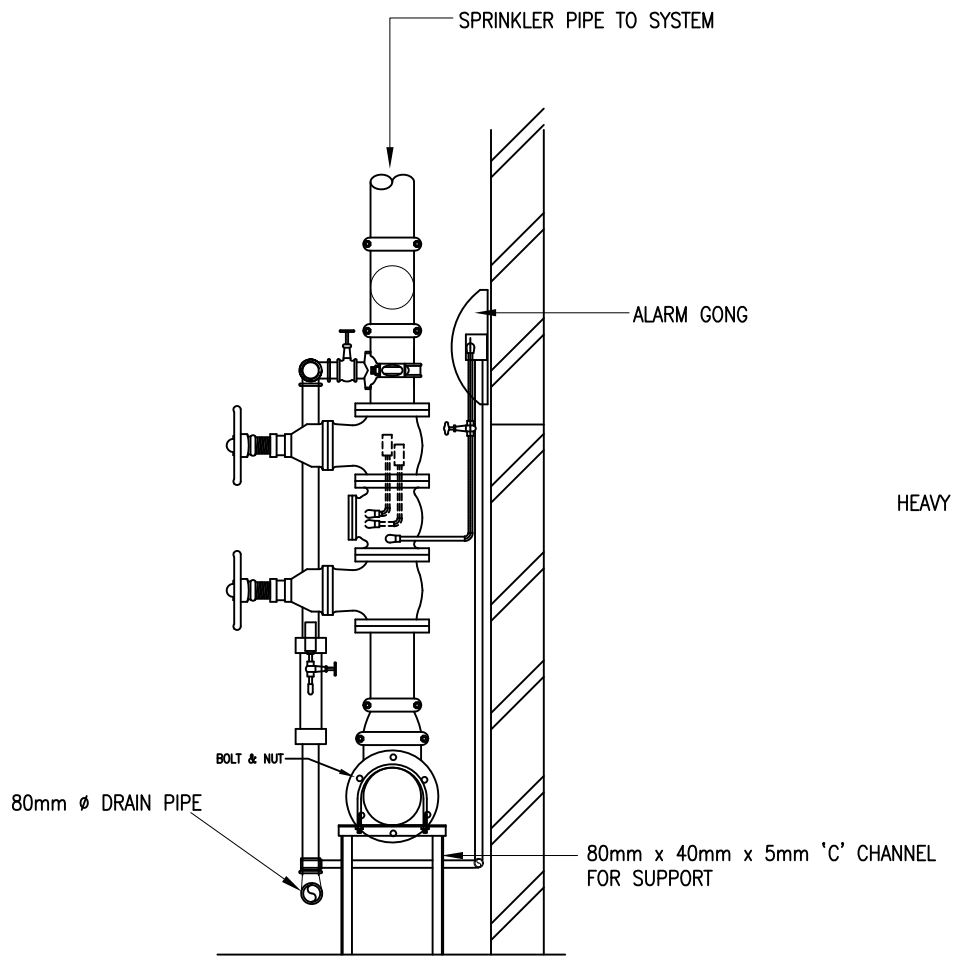

SIDE VIEW

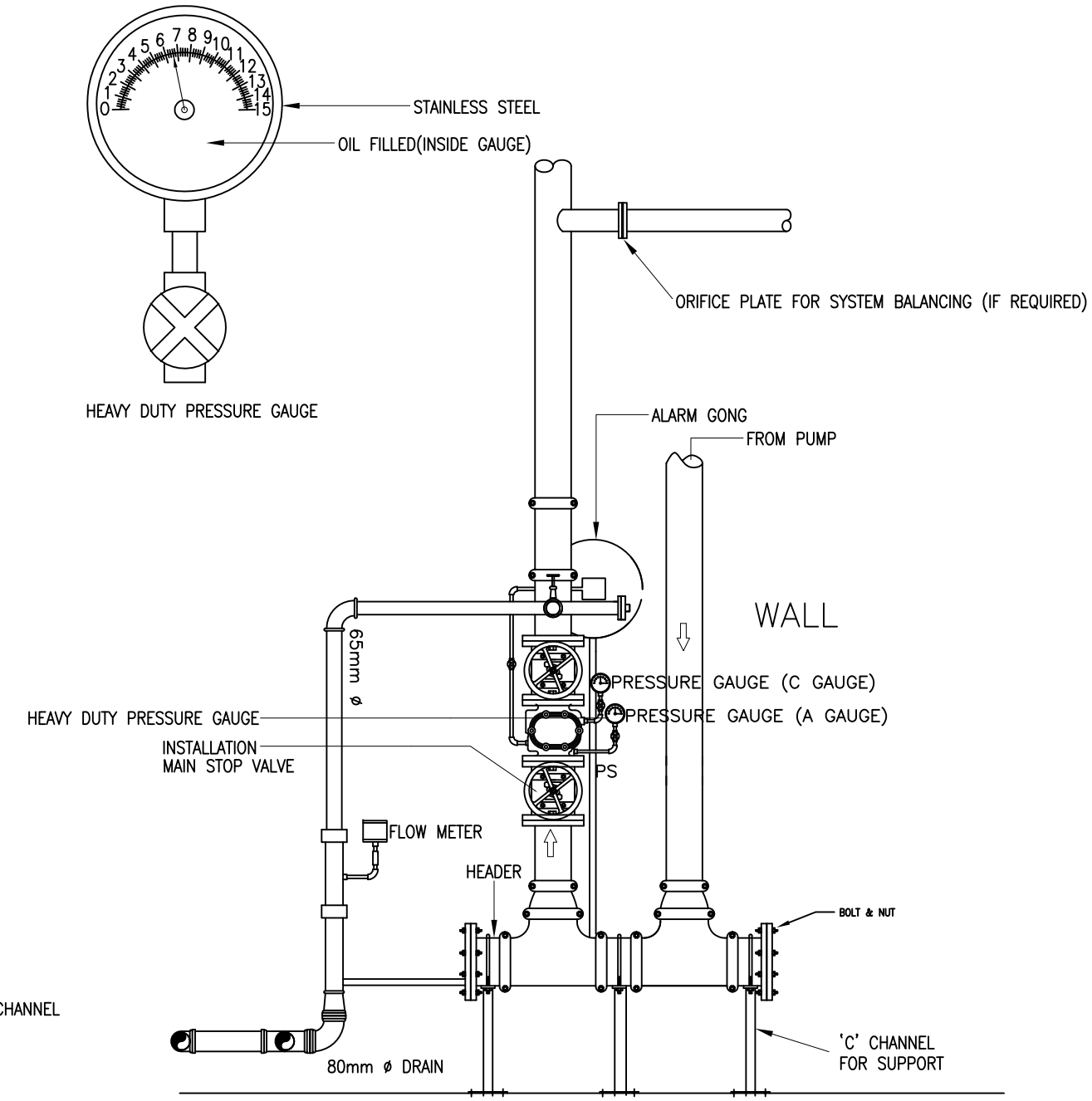

FRONT VIEW

DETAIL SPRINKLER CONTROL VALVE

JASA KEPADA RAKYAT

CAWANGAN KEJURUTERAAN MEKANIKAL
Ibu Pejabat JKR Malaysia

FIRE FIGHTING SYSTEM

DETAIL SPRINKLER CONTROL VALVE

DATE	SCALE
2017	NTS

DRAWING NUMBER
CKM/STD/FF/SPRINKLER/REV2017/01

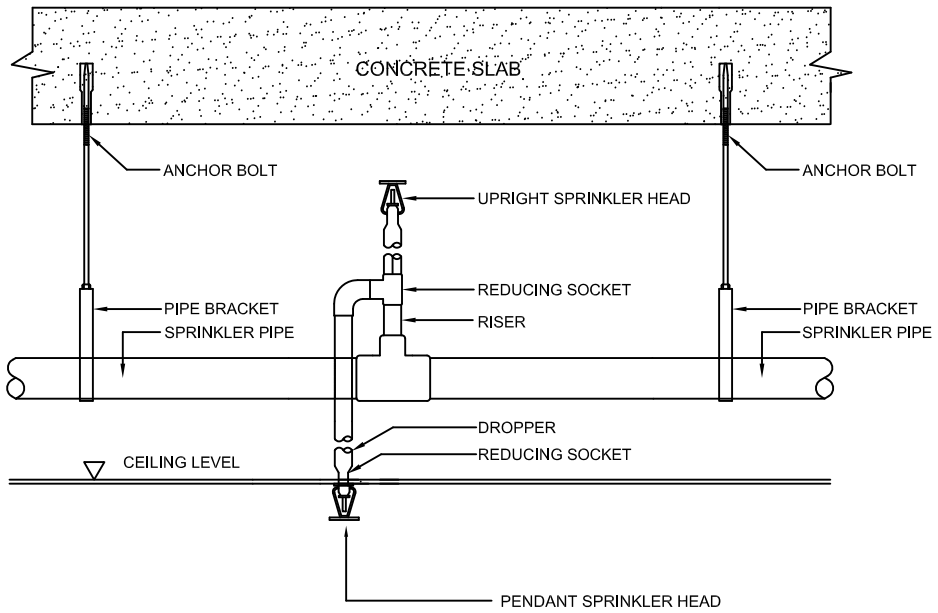

PENDANT AND UPRIGHT SPRINKLER INSTALLATION

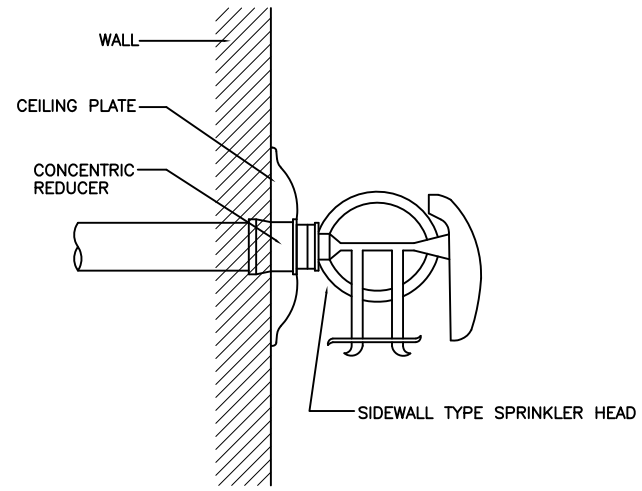

SIDEWALL TYPE SPRINKLER

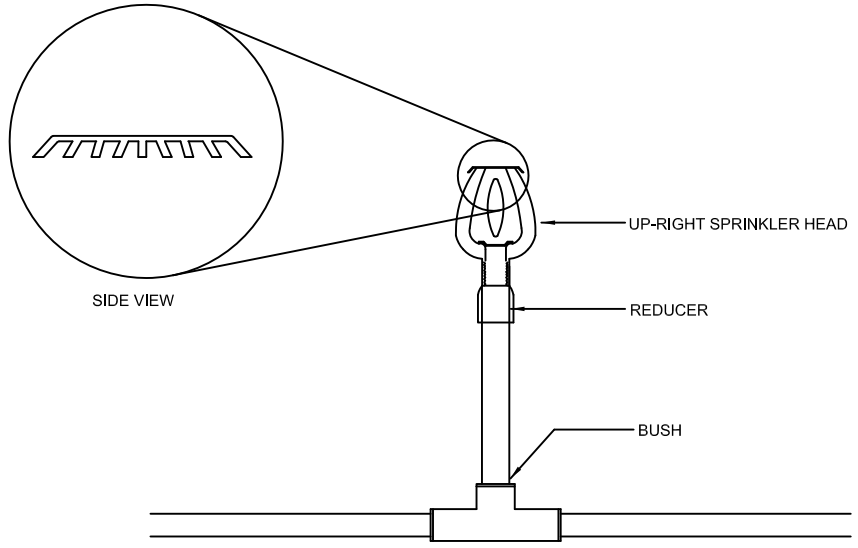

UPRIGHT SPRINKLER HEAD

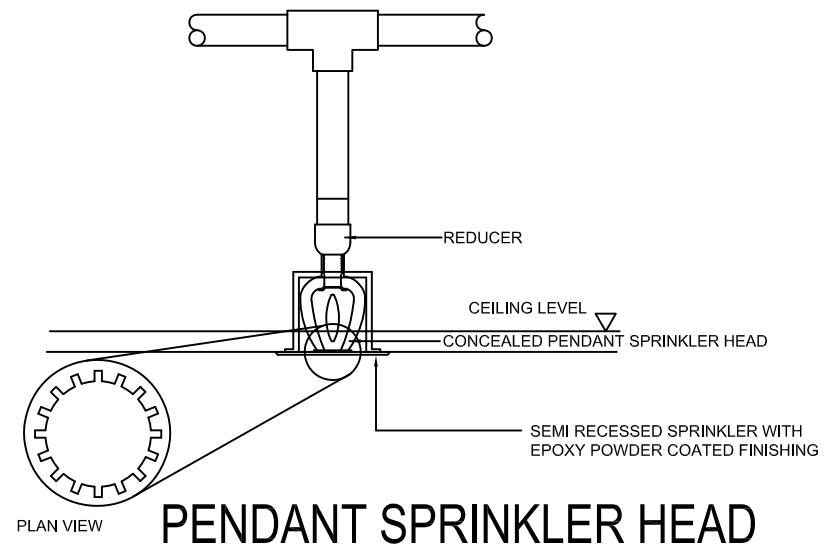

PENDANT SPRINKLER HEAD

TYPICAL TYPES OF SPRINKLER AND INSTALLATION

JKR MEKANIKAL

JASA KEPADA RAKYAT

CAWANGAN KEJURUTERAAN MEKANIKAL
Ibu Pejabat JKR Malaysia

FIRE FIGHTING SYSTEM

TYPICAL TYPES OF SPRINKLER AND INSTALLATION

DATE	SCALE
2017	NTS

DRAWING NUMBER
CKM/STD/FF/SPRINKLER/REV2017/02

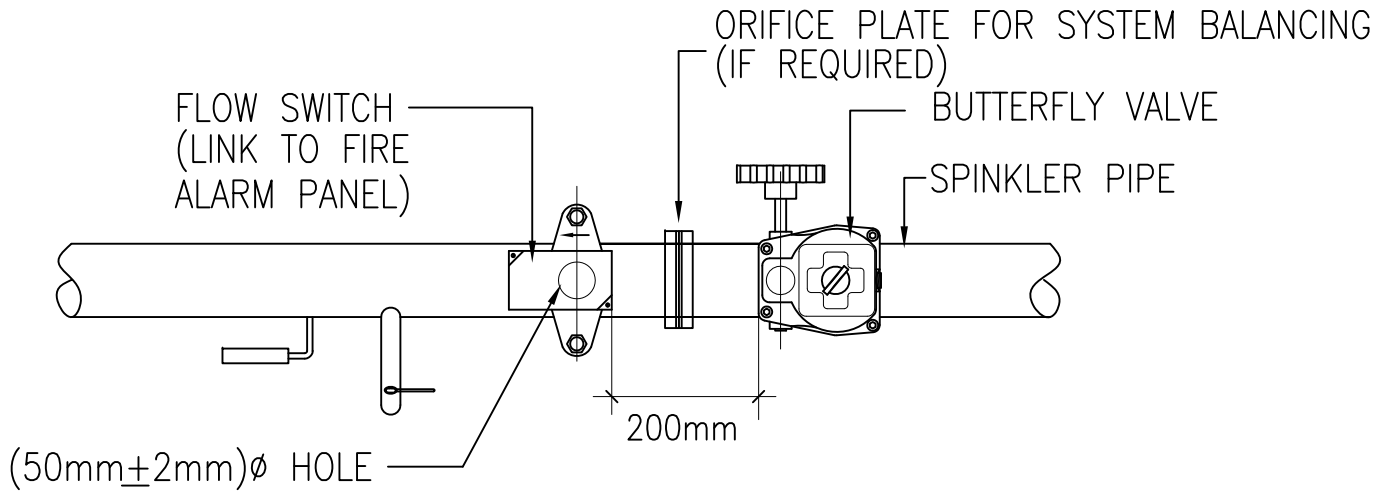

PLAN VIEW

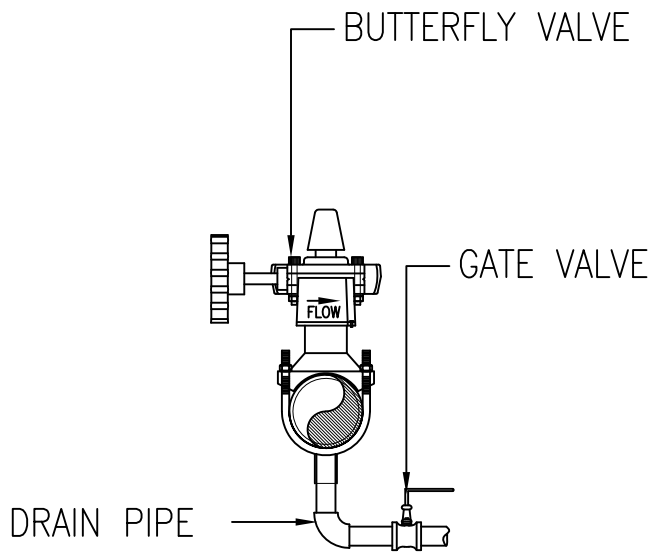

FRONT VIEW

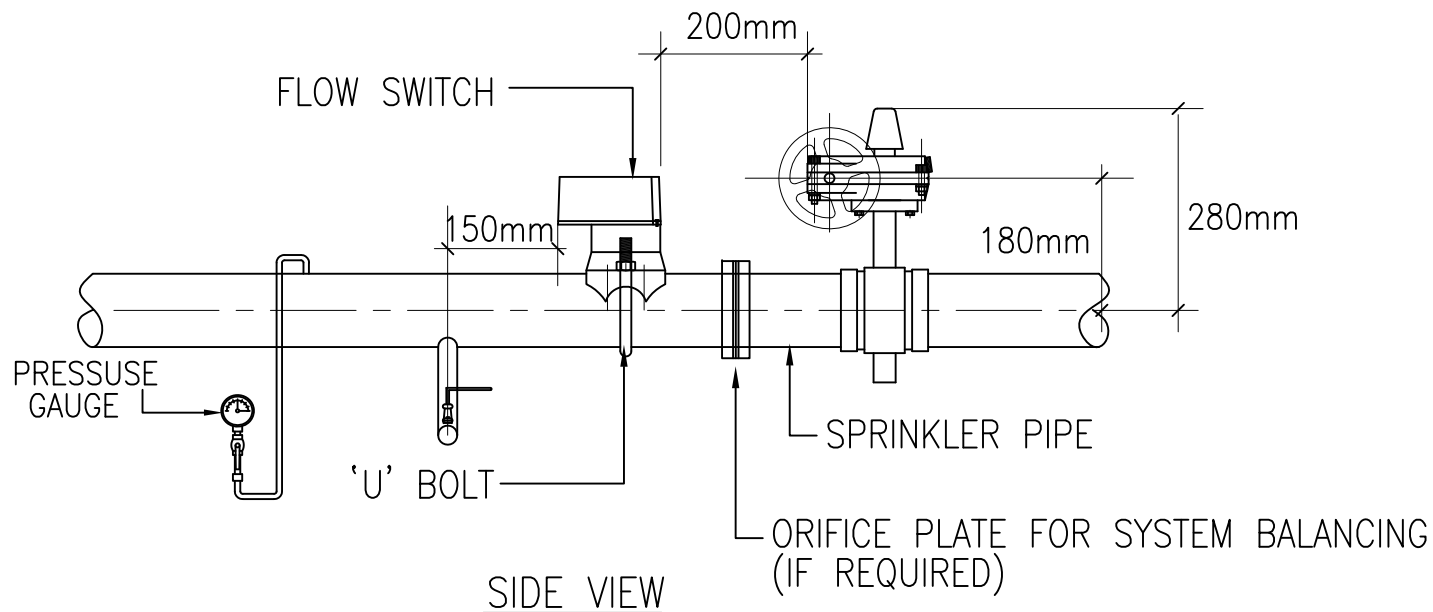

SIDE VIEW

TYPICAL FLOW SWITCH & BUTTERFLY VALVE INSTALLATION (SPRINKLER)

JKR MEKANIKAL

JASA KEPADA RAKYAT

CAWANGAN KEJURUTERAAN MEKANIKAL
Ibu Pejabat JKR Malaysia

FIRE FIGHTING SYSTEM

TYPICAL FLOW SWITCH AND BUTTERFLY VALVE INSTALLATION (SPRINKLER)

DATE	SCALE
2017	NTS

DRAWING NUMBER
CKM/STD/FF/SPRINKLER/REV2017/03

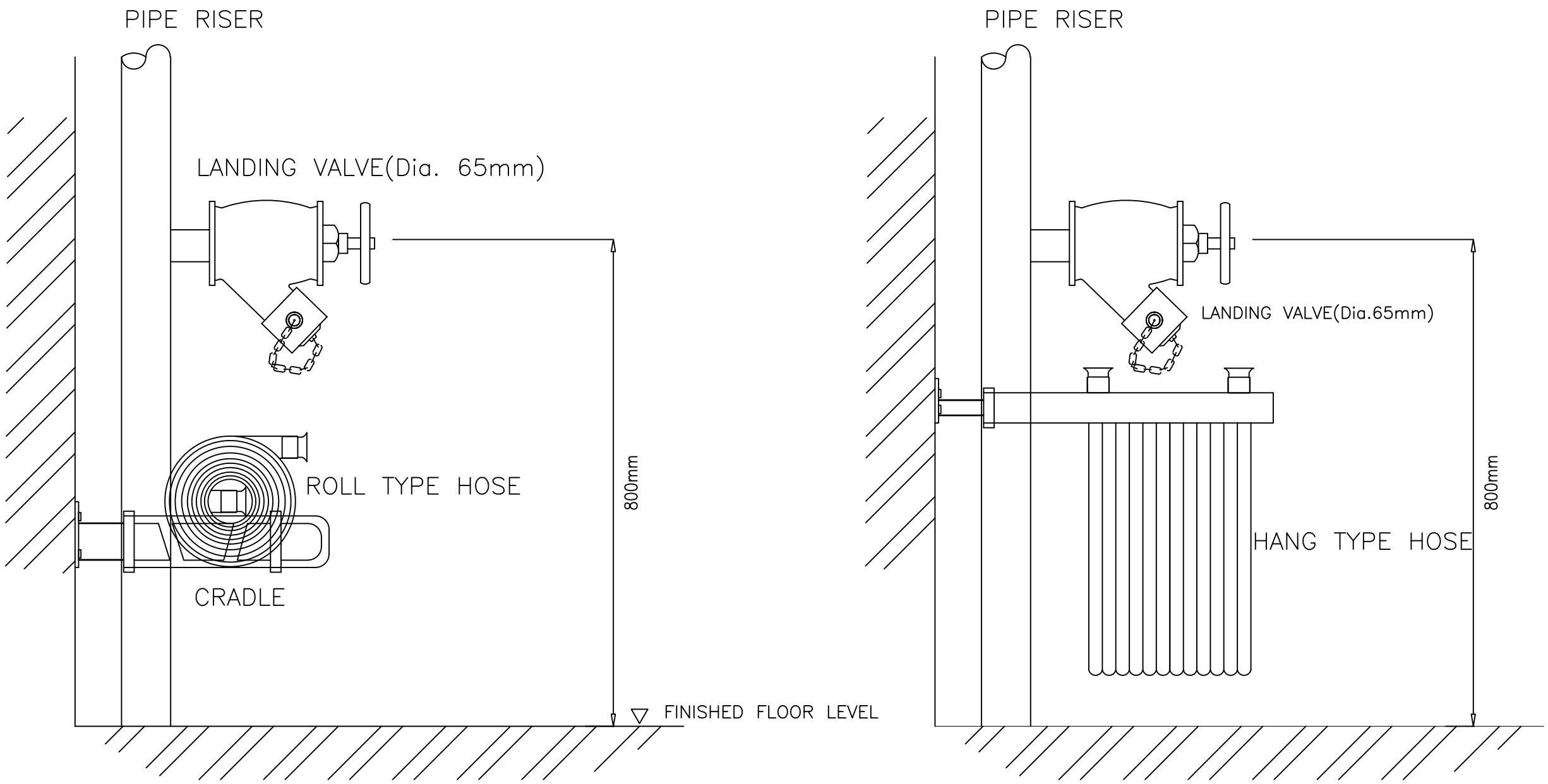

TYPICAL SIDE ELEVATION OF LANDING VALVE (DRY OR WET RISER)

JKR MEKANIKAL

JASA KEPADA RAKYAT

CAWANGAN KEJURUTERAAN MEKANIKAL
Ibu Pejabat JKR Malaysia

FIRE FIGHTING SYSTEM

TYPICAL SIDE ELEVATION OF LANDING VALVE (DRY OR WET RISER)

DATE	SCALE
2017	NTS

DRAWING NUMBER
CKM/STD/FF/DRY & WET RISER/REV2017/01

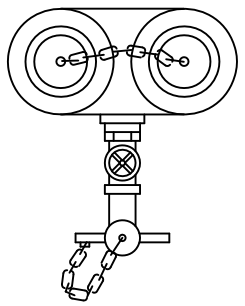

FRONT VIEW 2-WAY

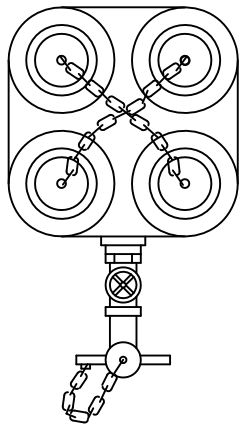

FRONT VIEW 4-WAY

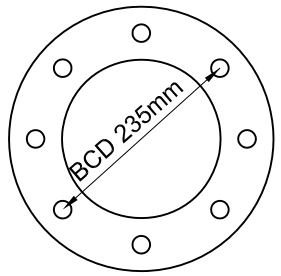

FLANGE

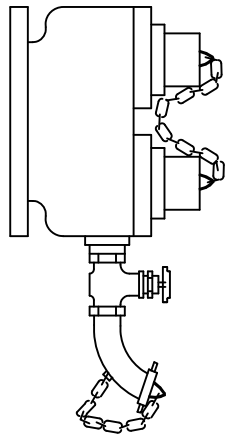

SIDE VIEW

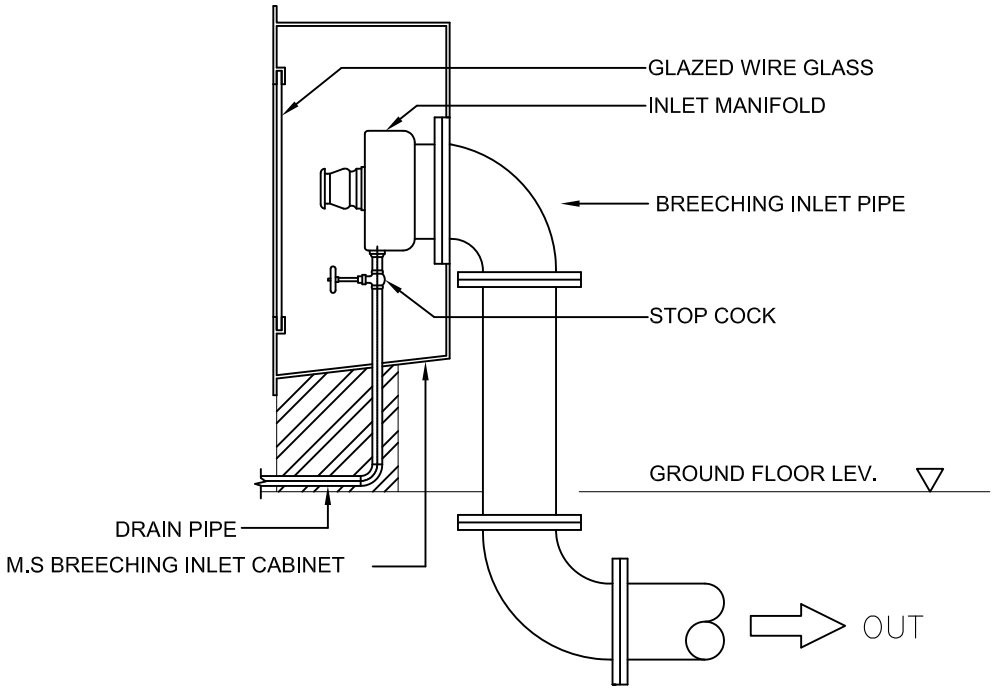

SIDE VIEW - 2 WAY

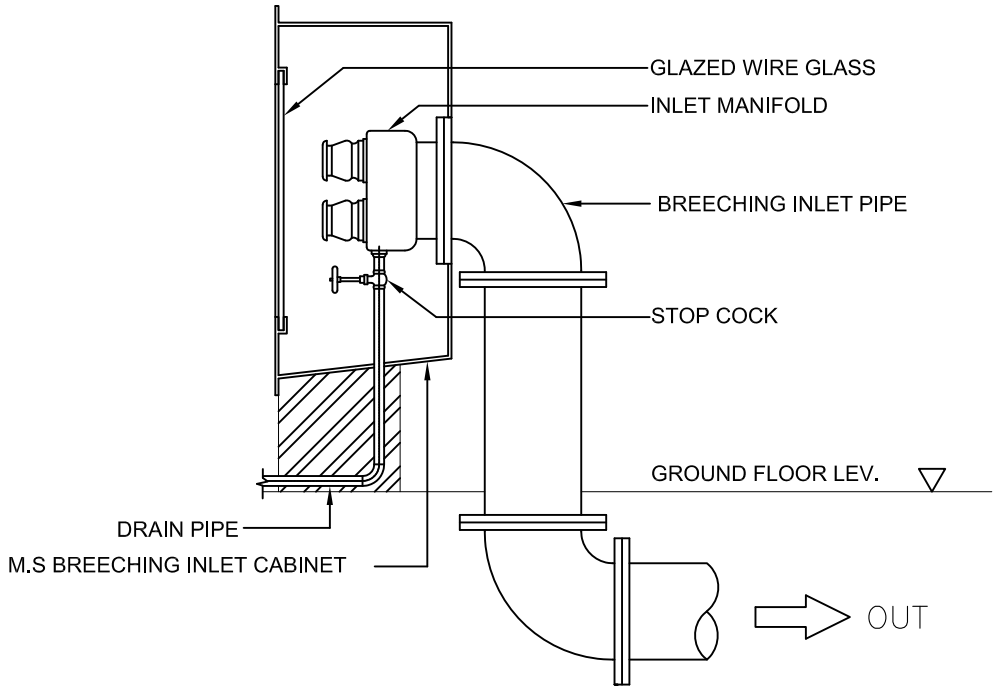

SIDE VIEW - 4 WAY

TYPICAL 4-WAY / 2-WAY BREECHING INLET

JKR MEKANIKAL

JASA KEPADA RAKYAT

CAWANGAN KEJURUTERAAN MEKANIKAL
Ibu Pejabat JKR Malaysia

FIRE FIGHTING SYSTEM

TYPICAL TYPES OF BREECHING INLET

DATE	SCALE
2017	NTS

DRAWING NUMBER
CKM/STD/FF/DRY & WET RISER/REV2017/02

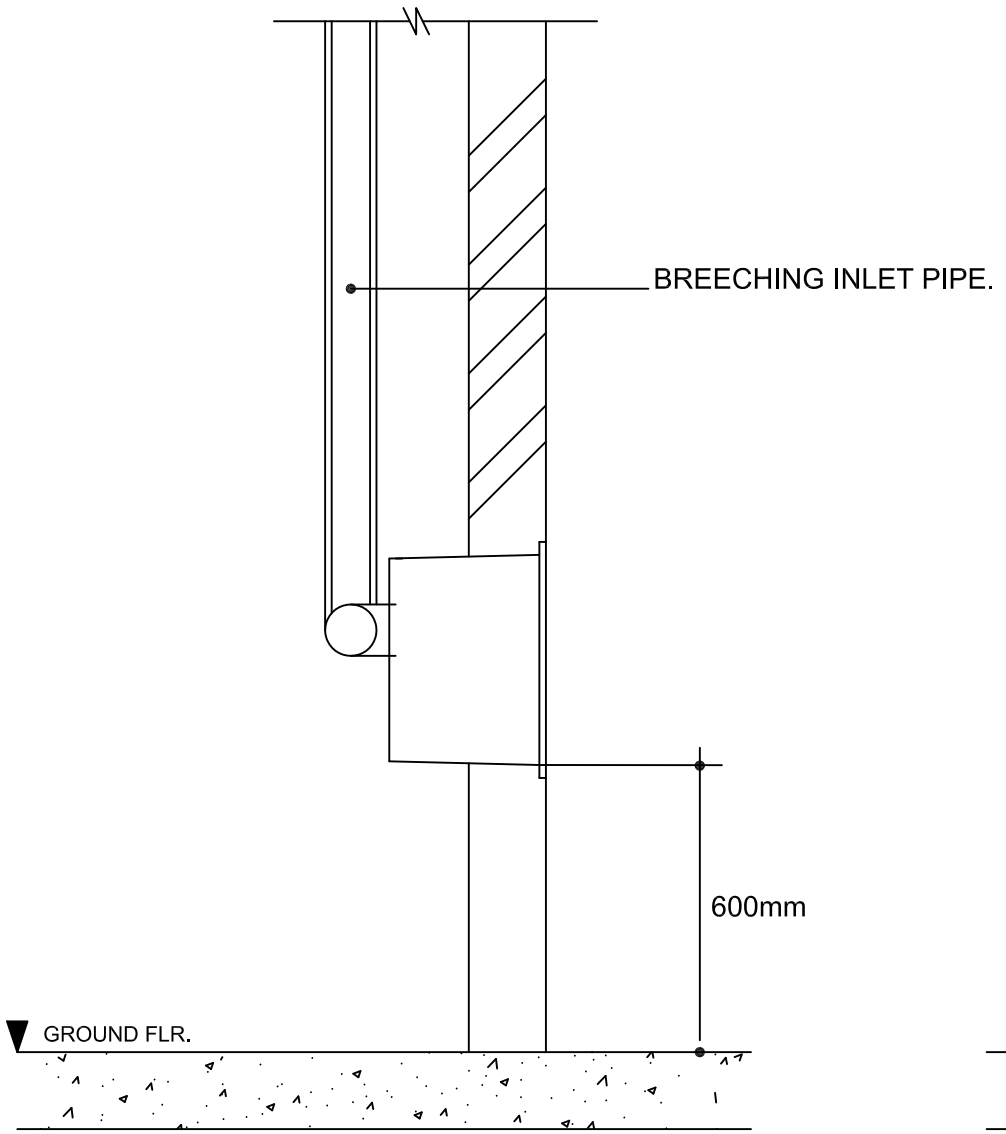

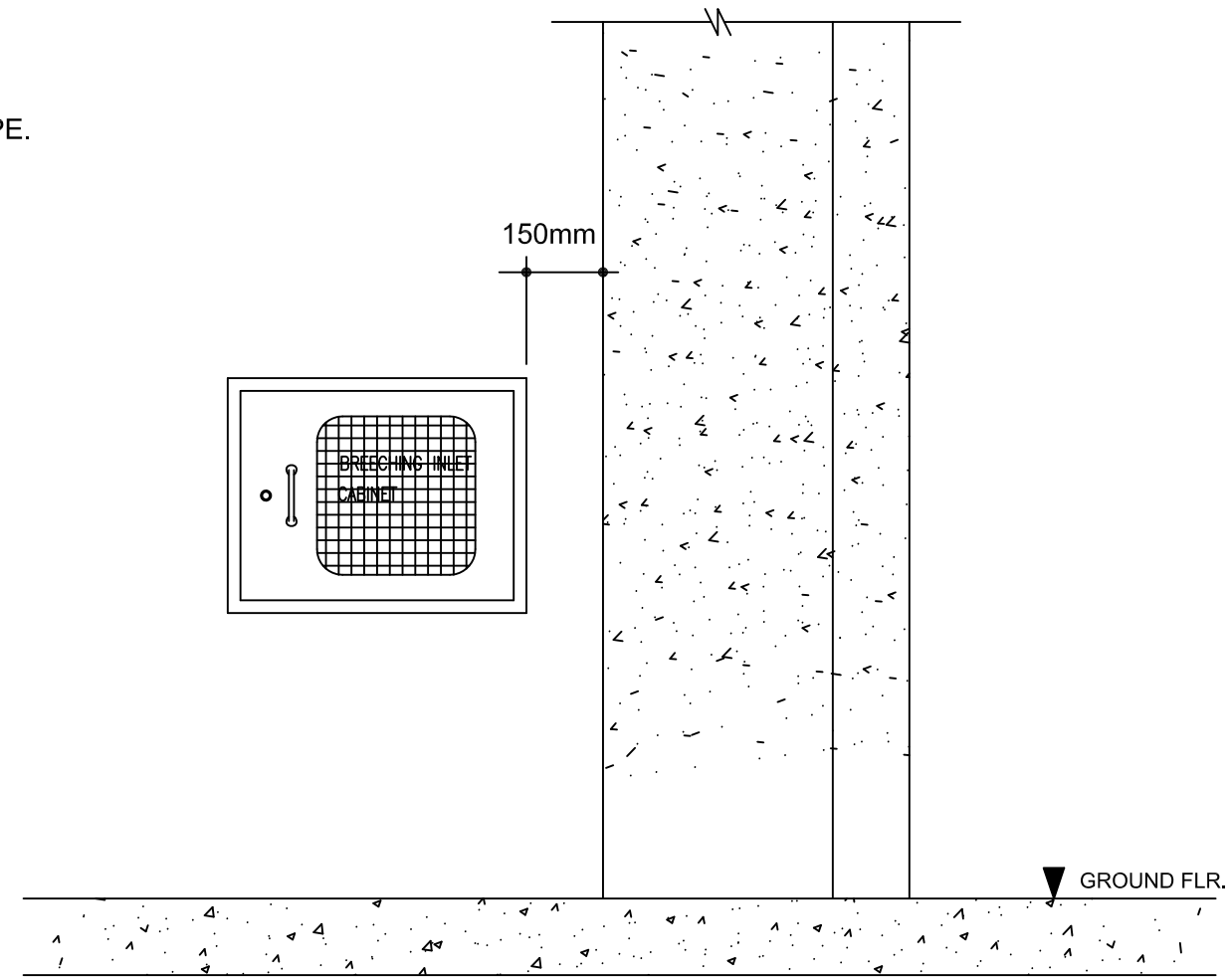

TYPICAL BREECHING INLET CABINET

JKR MEKANIKAL

JASA KEPADA RAKYAT

CAWANGAN KEJURUTERAAN MEKANIKAL
Ibu Pejabat JKR Malaysia

FIRE FIGHTING SYSTEM

TYPICAL BREECHING INLET CABINET

DATE	SCALE
2017	NTS

DRAWING NUMBER

CKM/STD/FF/DRY & WET RISER/REV2017/03

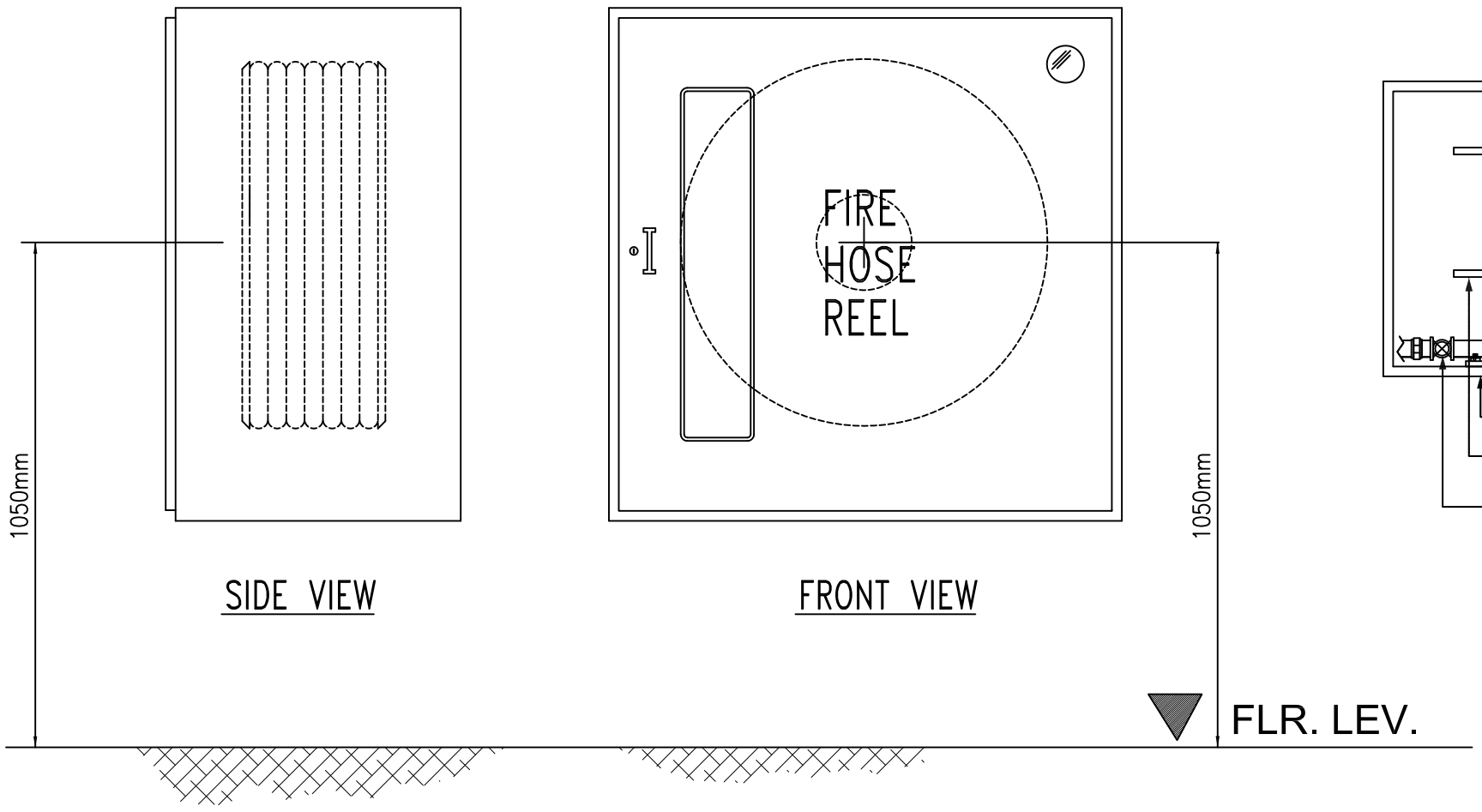

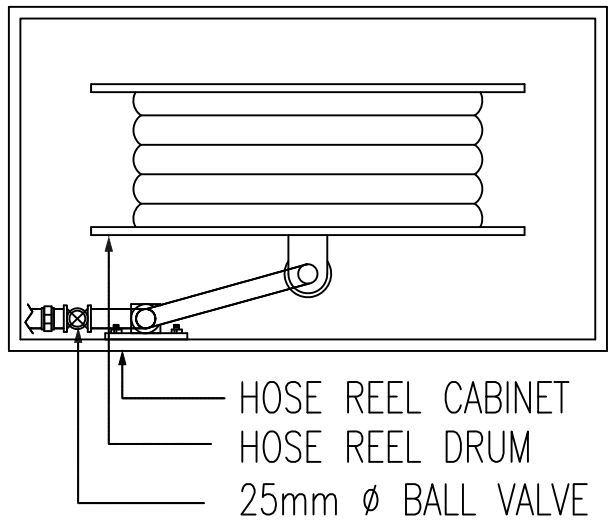

DETAIL OF HOSE REEL CABINET

JKR MEKANIKAL

JASA KEPADA RAKYAT

CAWANGAN KEJURUTERAAN MEKANIKAL
Ibu Pejabat JKR Malaysia

FIRE FIGHTING SYSTEM

DETAIL OF HOSE REEL CABINET

DATE	SCALE
2017	NTS

DRAWING NUMBER

CKM/STD/FF/HOSE REEL/REV2017/01

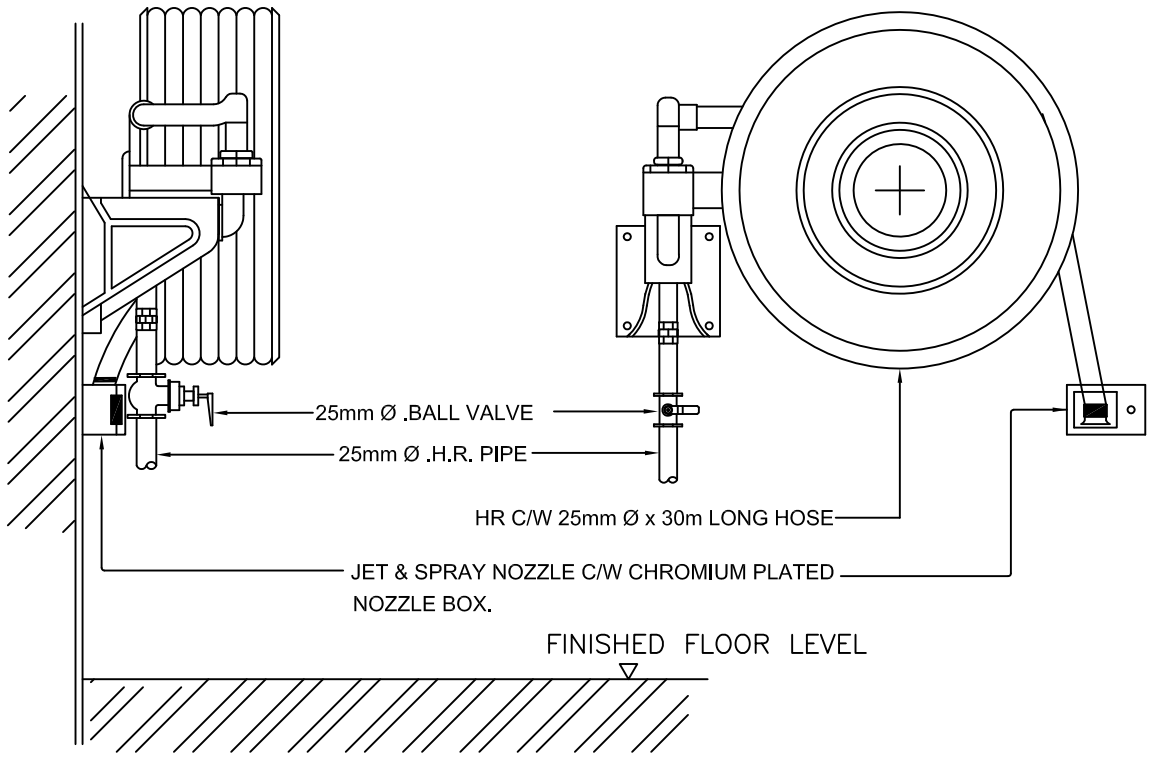

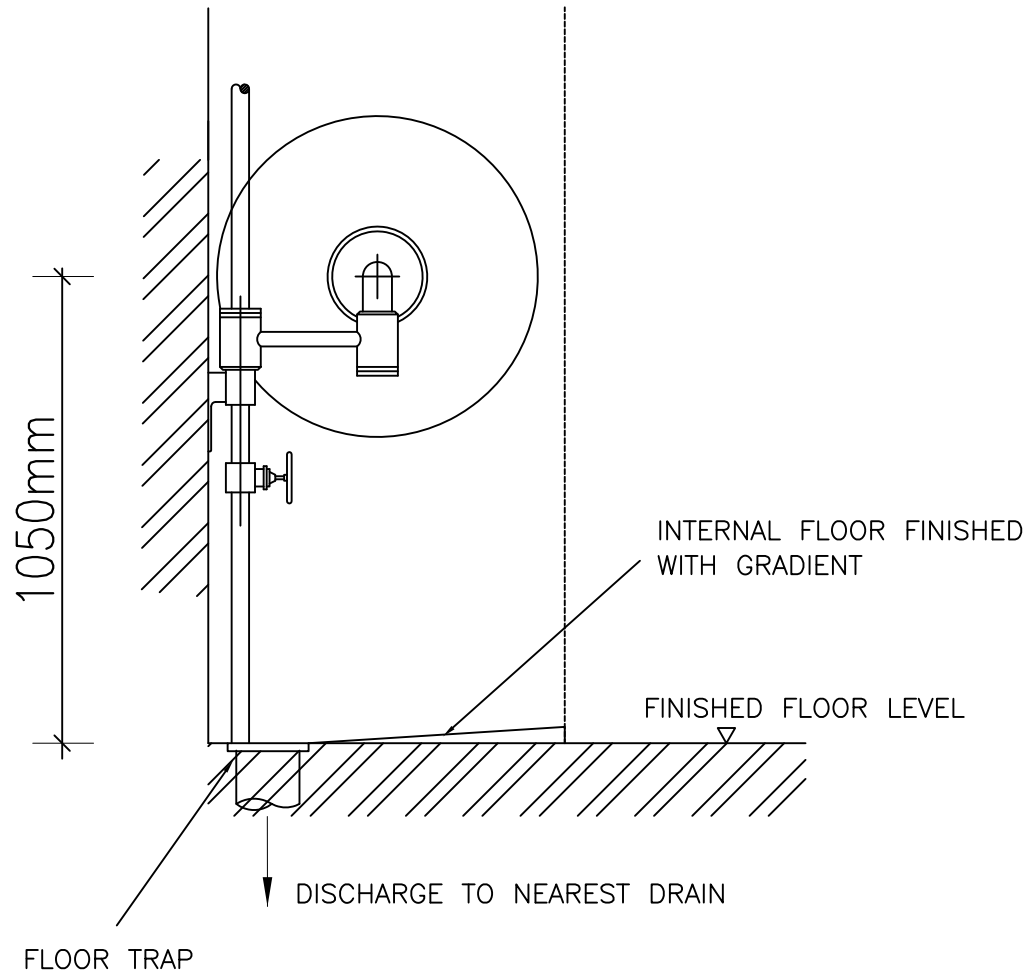

DETAIL OF HOSE REEL INSTALLATION

JASA KEPADA RAKYAT

CAWANGAN KEJURUTERAAN MEKANIKAL
Ibu Pejabat JKR Malaysia

FIRE FIGHTING SYSTEM

DETAIL OF HOSE REEL INSTALLATION

DATE	SCALE
2017	NTS

DRAWING NUMBER
CKM/STD/FF/HOSE REEL/REV2017/02

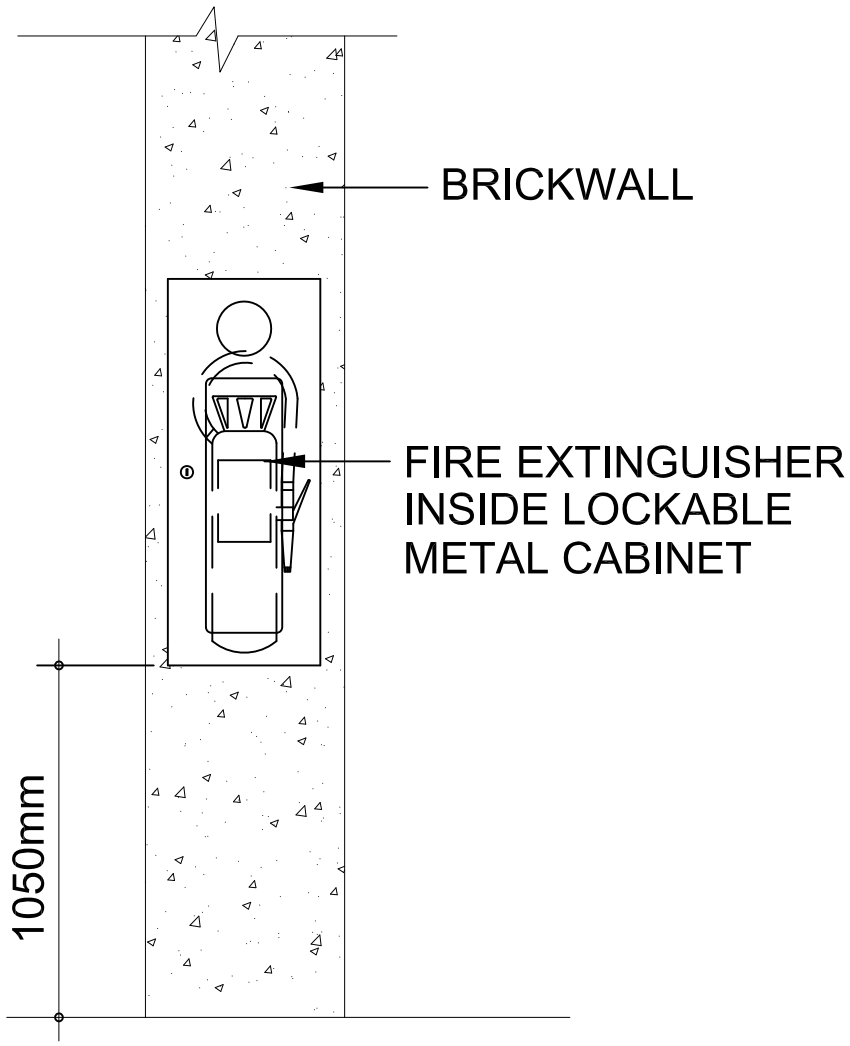

FRONT VIEW

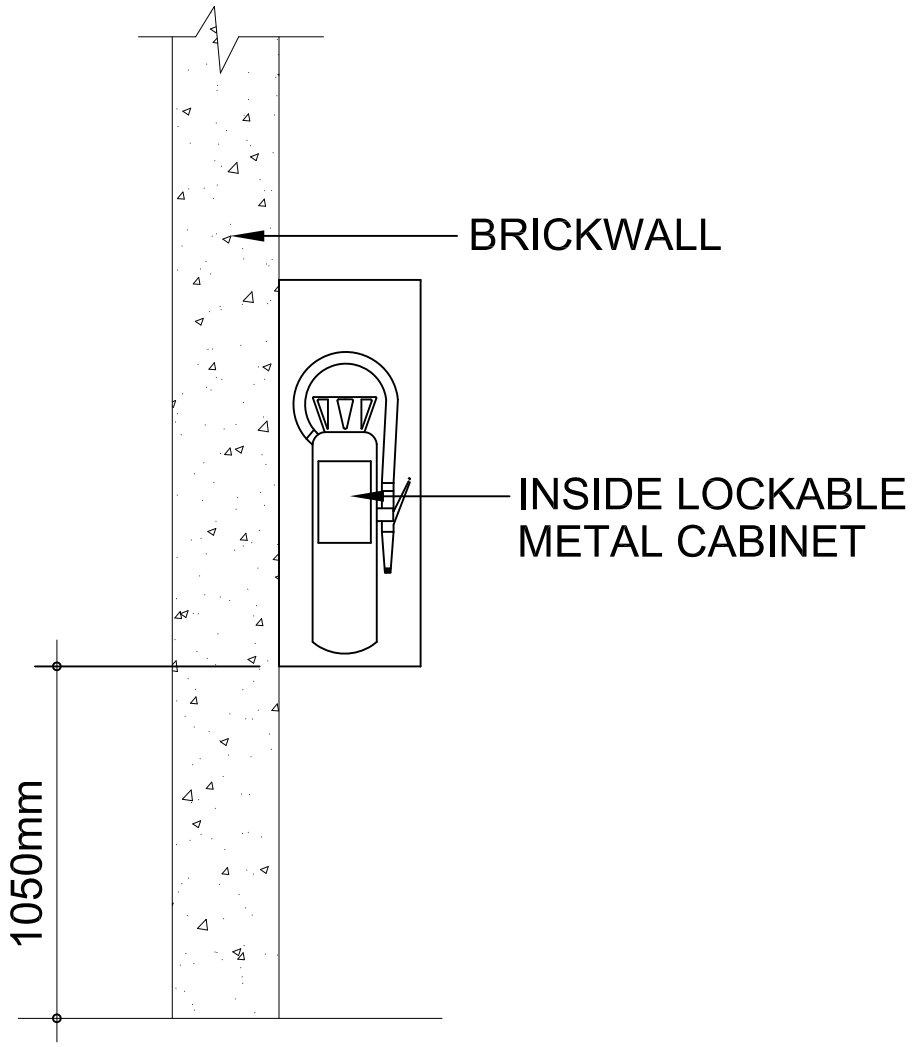

SIDE VIEW

DETAIL OF PORTABLE FIRE EXTINGUISHER INSTALLATION

JASA KEPADA RAKYAT

CAWANGAN KEJURUTERAAN MEKANIKAL
Ibu Pejabat JKR Malaysia

FIRE FIGHTING SYSTEM

DETAIL OF PORTABLE FIRE EXTINGUISHER INSTALLATION

DATE	SCALE
2017	NTS

DRAWING NUMBER
CKM/STD/FF/EXTINGUISHER/REV2017/01

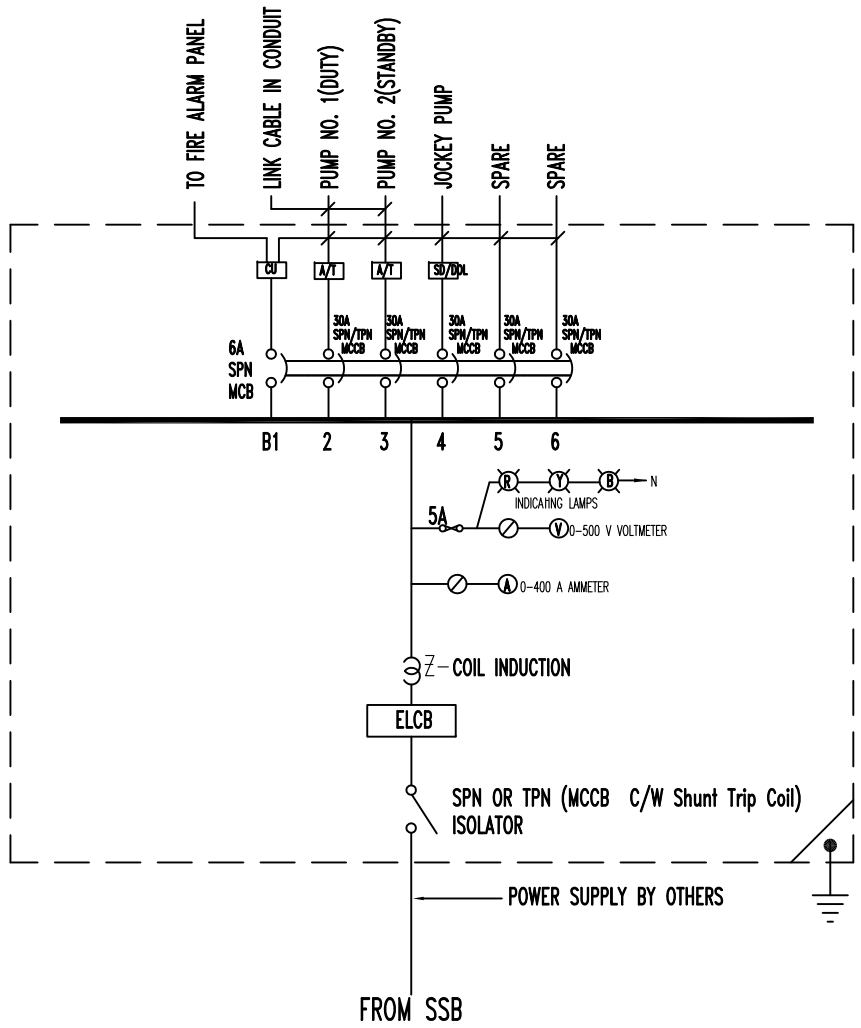

TYPICAL DIAGRAM FOR SPRINKLER & WET RISER PUMP SWITCHBOARD

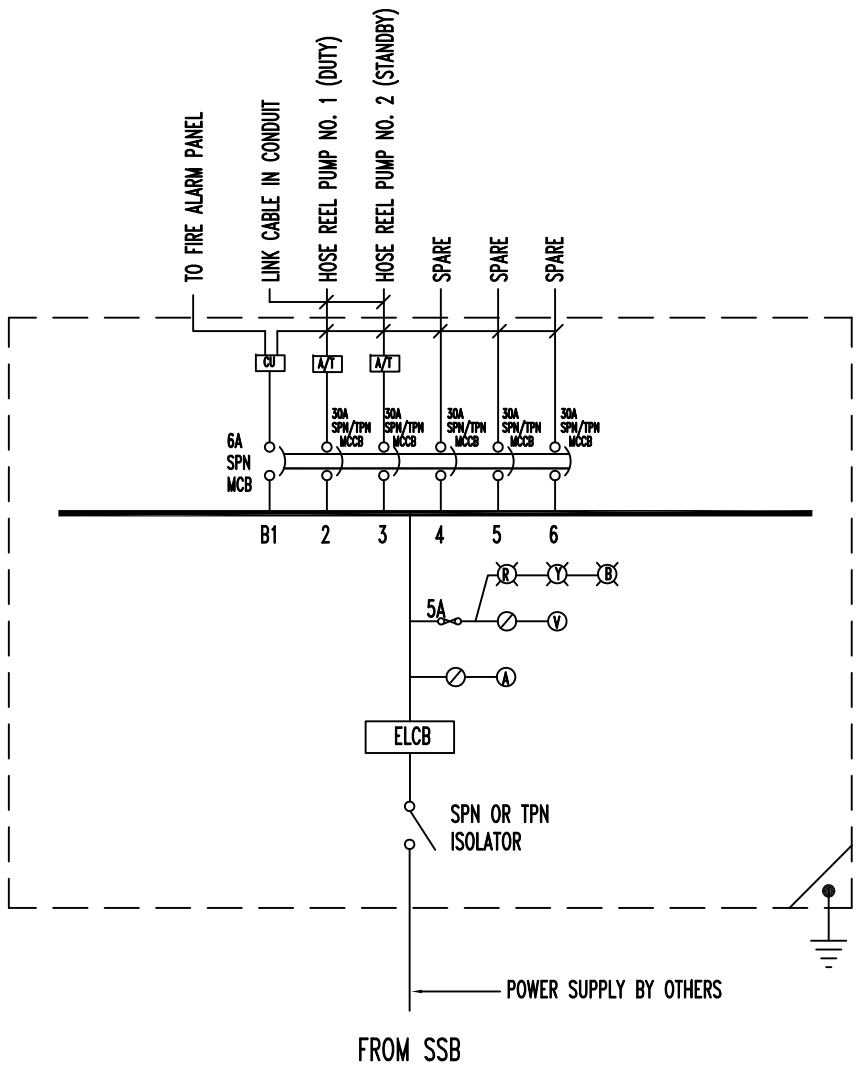

TYPICAL SINGLE LINE DIAGRAM FOR HOSE REEL PUMP SWITCHBOARD

LEGEND

TPN	Triple Pole & Neutral
ELCB	Earth Leakage Circuit Breaker
SPN	Single Pole & Neutral
SSB	Sub Switch Board
MCCB	Moulded Case Circuit Breaker
MCB	Miniature Circuit Breaker
CU	Cooper
A/T	Auto Transformer
SD	Star Delta
DOL	Direct On Line
A	Ampere
V	Volt
R	Red
Y	Yellow
B	Blue

JKR MEKANIKAL

JASA KEPADA RAKYAT

CAWANGAN KEJURUTERAAN MEKANIKAL
Ibu Pejabat JKR Malaysia

FIRE FIGHTING SYSTEM

TYPICAL CIRCUIT DIAGRAM
FOR PUMP SWITCHBOARD

DATE	SCALE
2017	NTS

DRAWING NUMBER
CKM/STD/FF/SWITCHBOARD/REV2017/01

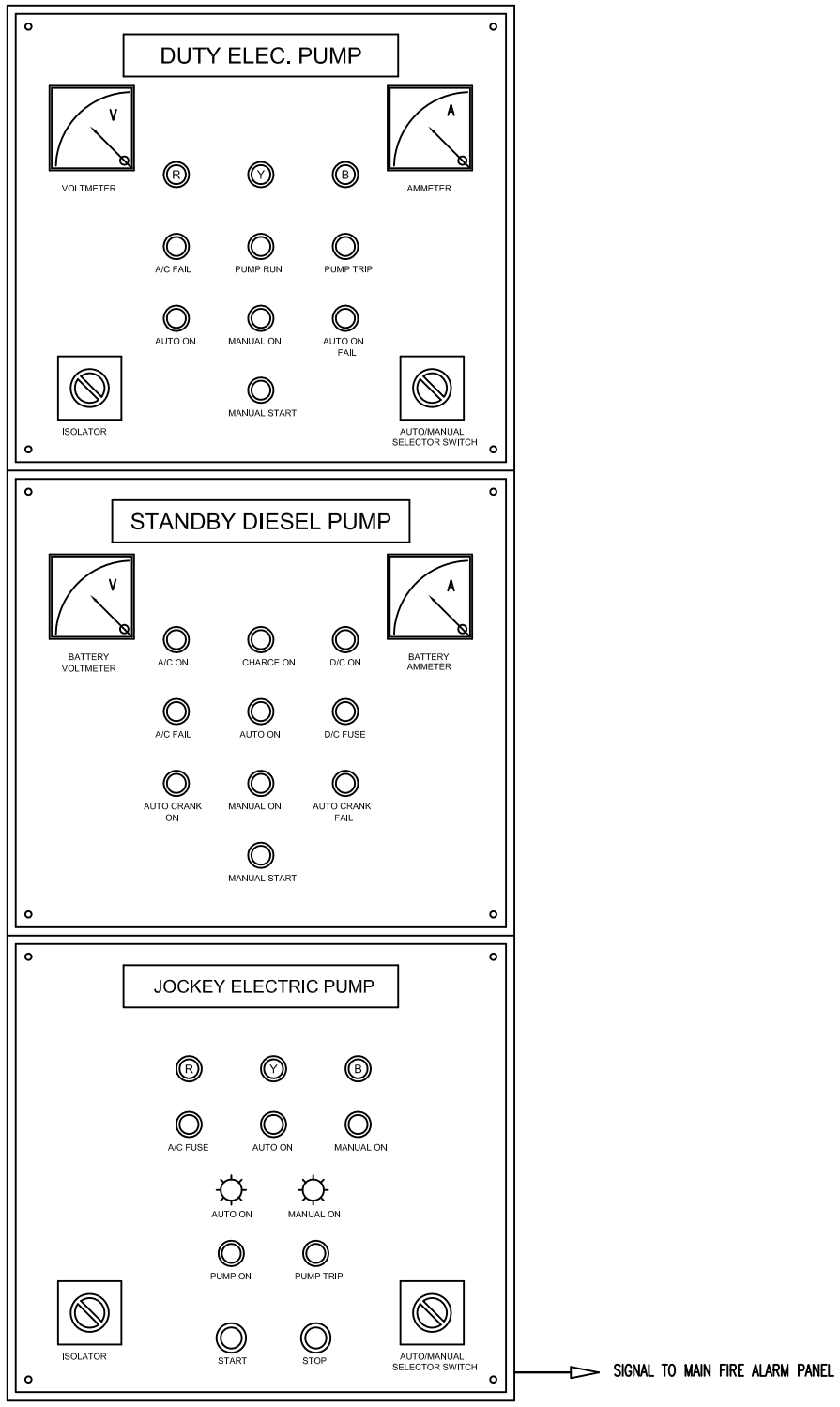

TYPICAL SPRINKLER AND WET RISER PUMP SWITCHBOARD

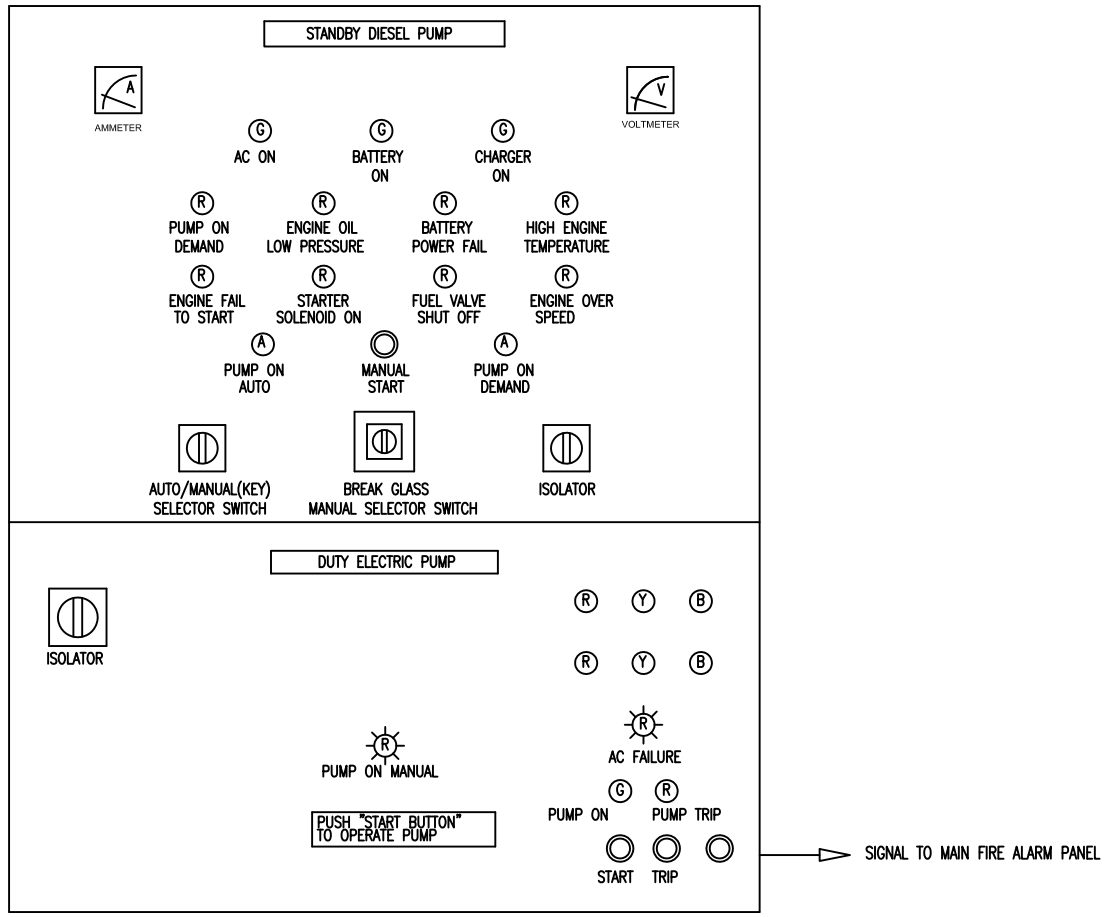

TYPICAL HOSE REEL STARTER PUMP SWITCHBOARD

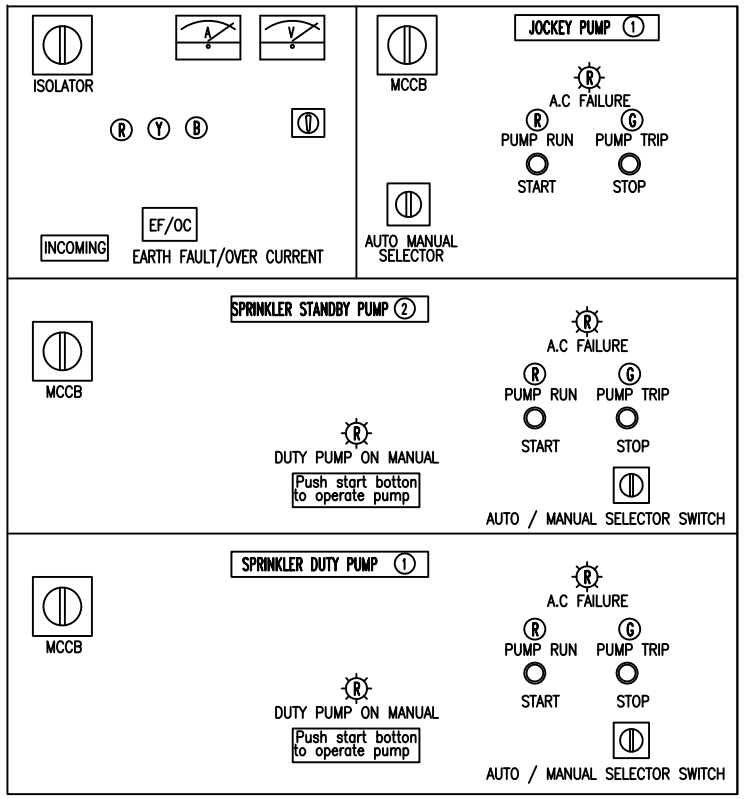

TYPICAL SPRINKLER AND WET RISER PUMP SWITCHBOARD

JKR MEKANIKAL

JASA KEPADA RAKYAT

CAWANGAN KEJURUTERAAN MEKANIKAL
Ibu Pejabat JKR Malaysia

FIRE FIGHTING SYSTEM

TYPICAL PUMP SWITCHBOARD FOR HOSE REEL, SPRINKLER AND WET RISER

DATE	SCALE
2017	NTS

DRAWING NUMBER
CKM/STD/FF/SWITCHBOARD/REV2017/02

PERINGATAN!

JANGAN MASUK KE BILIK
INI BILA GAS DILEPASKAN

EMERGENCY INSTRUCTION SIGN (Located On Door)

ARAHAN KECEMASAN

Bilik Ini Dikawal Oleh Alat Pengesan Haba.

Asap Dan Sistem Automatik Pencegah Kebakaran

Total Flooding Extinguishing System:

1. Dilarang Merokok Di dalam Bilik Ini.
2. Keluar Dengan SegeraDaripada Bilik Ini Apabila Lonceng Amaran Berbunyi.
3. Jangan Masuk Ke Bilik Ini Bila Gas Dilepaskan

EMERGENCY INSTRUCTION SIGN

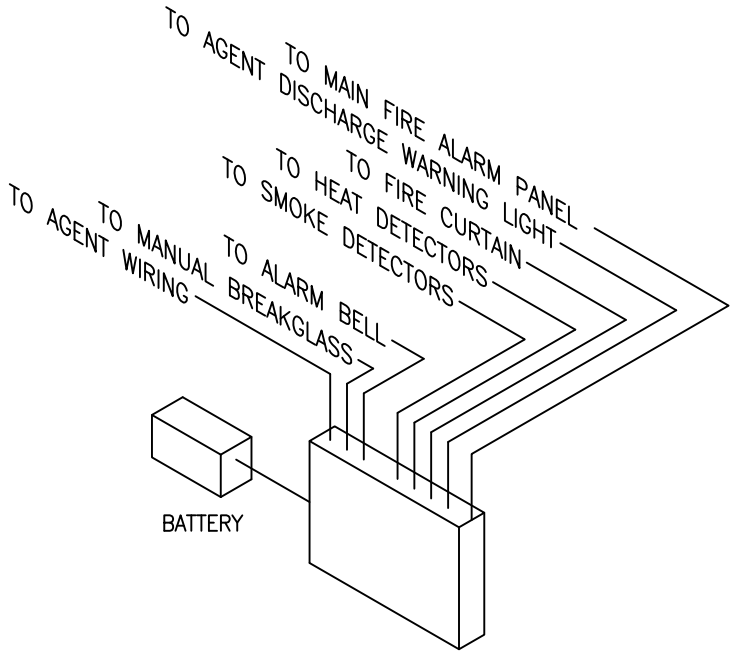

TOTAL FLOODING FIRE EXTINGUISHING SWITCHBOARD

ISOMETRIC DIAGRAM

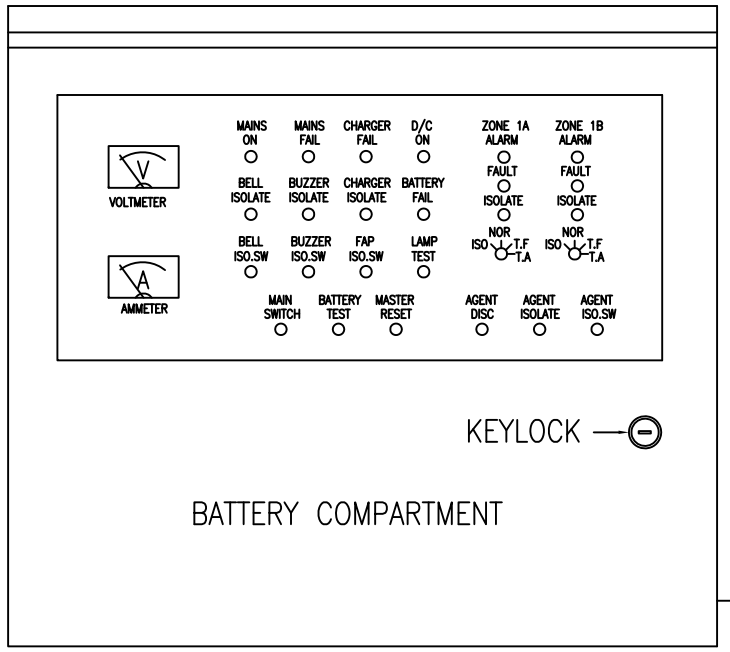

FRONT ELEVATION

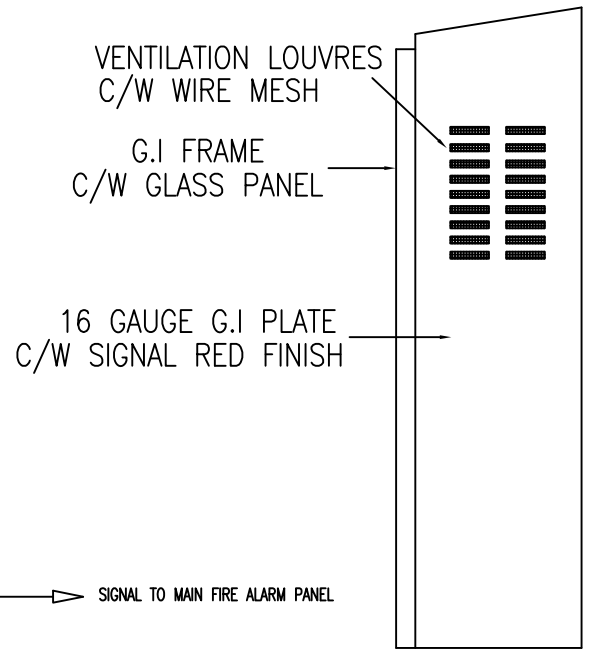

SIDE ELEVATION

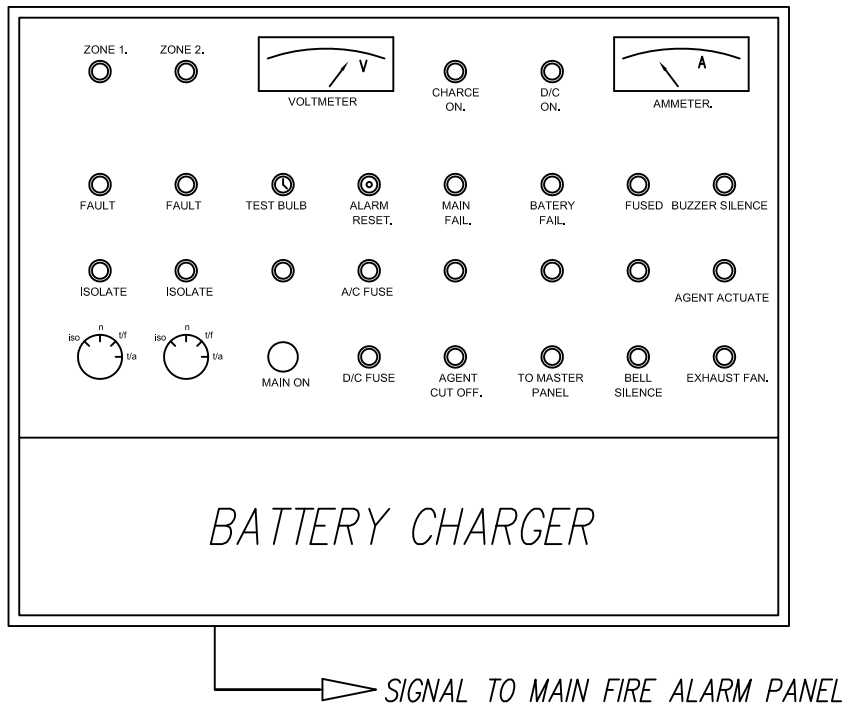

TYPICAL FIRE SUPPRESSION SYSTEM SWITCHBOARD

JASA KEPADA RAKYAT

CAWANGAN KEJURUTERAAN MEKANIKAL
Ibu Pejabat JKR Malaysia

FIRE FIGHTING SYSTEM

TYPICAL SWITCHBOARD TYPES FOR FIRE SUPPRESSION SYSTEM

DATE	SCALE
2017	NTS

DRAWING NUMBER
CKM/STD/FF/SWITCHBOARD/REV2017/03

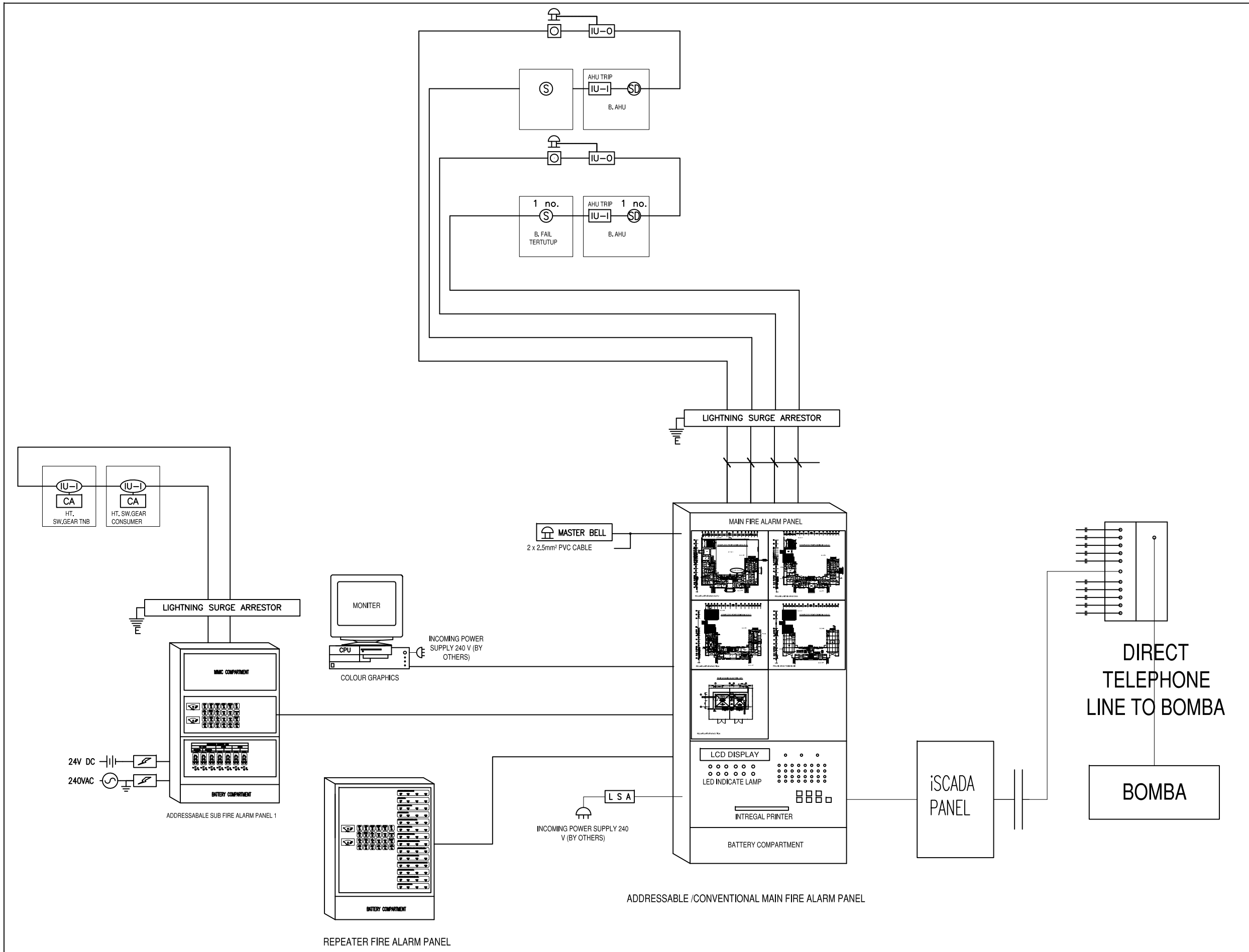

TYPICAL CONNECTION TO SPKA

LEGEND

- (S) – SMOKE DETECTOR
- (SD) – DUCT SMOKE DETECTOR
- (H) – HEAT DETECTOR
- – ALARM BELL
- – BREAK GLASS
- – CONTROL PANEL
- RPPU – REMOTE PROGRAMMABLE PROCESSING UNIT
- IU–I – INTERFACING UNIT – INPUT
- IU–O – INTERFACING UNIT – OUTPUT
- L S A – LIGHTNING SURGE ARRESTOR
- CA – CLEAN AGENT

JKR MEKANIKAL

JASA KEPADA RAKYAT

CAWANGAN KEJURUTERAAN MEKANIKAL
Ibu Pejabat JKR Malaysla

FIRE FIGHTING SYSTEM

SISTEM PENGAWASAN KEBAKARAN AUTOMATIK (SPKA)

DATE	SCALE
2017	NTS

DRAWING NUMBER
CKM/STD/FF/SWITCHBOARD/REV2017/04

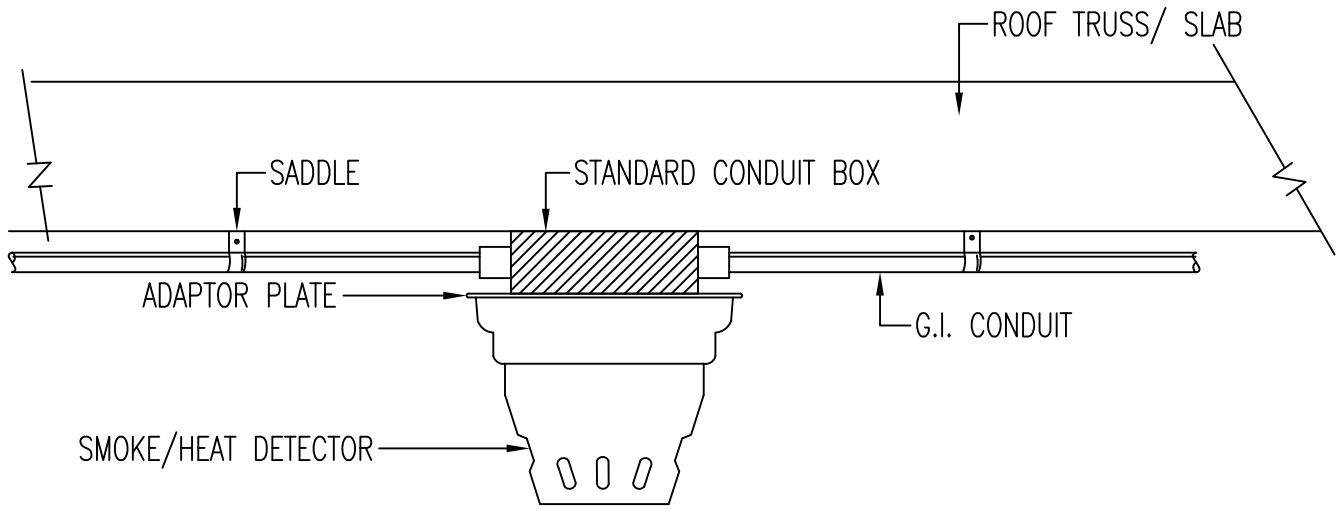

DETAIL OF SMOKE OR HEAT DETECTOR INSTALLATION ON ROOF TRUSS/ SLAB

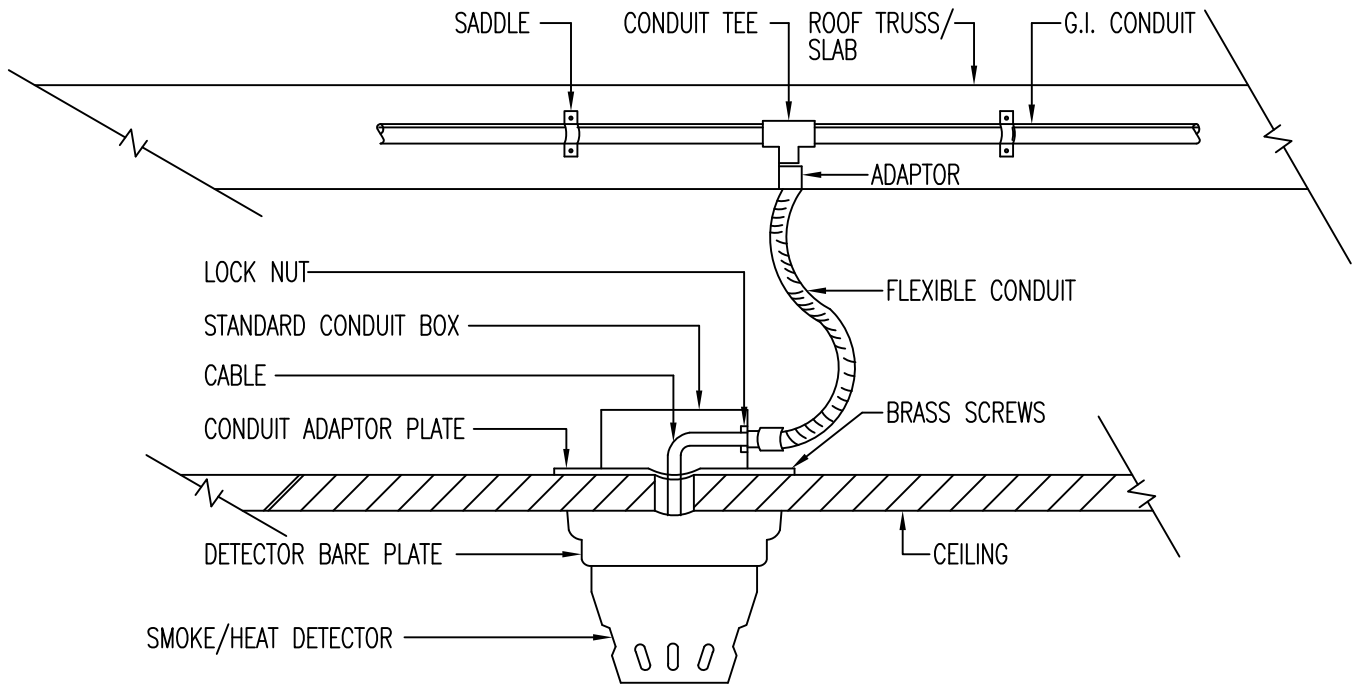

DETAIL OF SMOKE OR HEAT DETECTOR INSTALLATION ON CEILING

JKR MEKANIKAL

JASA KEPADA RAKYAT

CAWANGAN KEJURUTERAAN MEKANIKAL
Ibu Pejabat JKR Malaysia

FIRE FIGHTING SYSTEM

DETAIL OF SMOKE OR HEAT DETECTOR INSTALLATION

DATE	SCALE
2017	NTS

DRAWING NUMBER
CKM/STD/FF/FIRE ALARM/REV2017/01

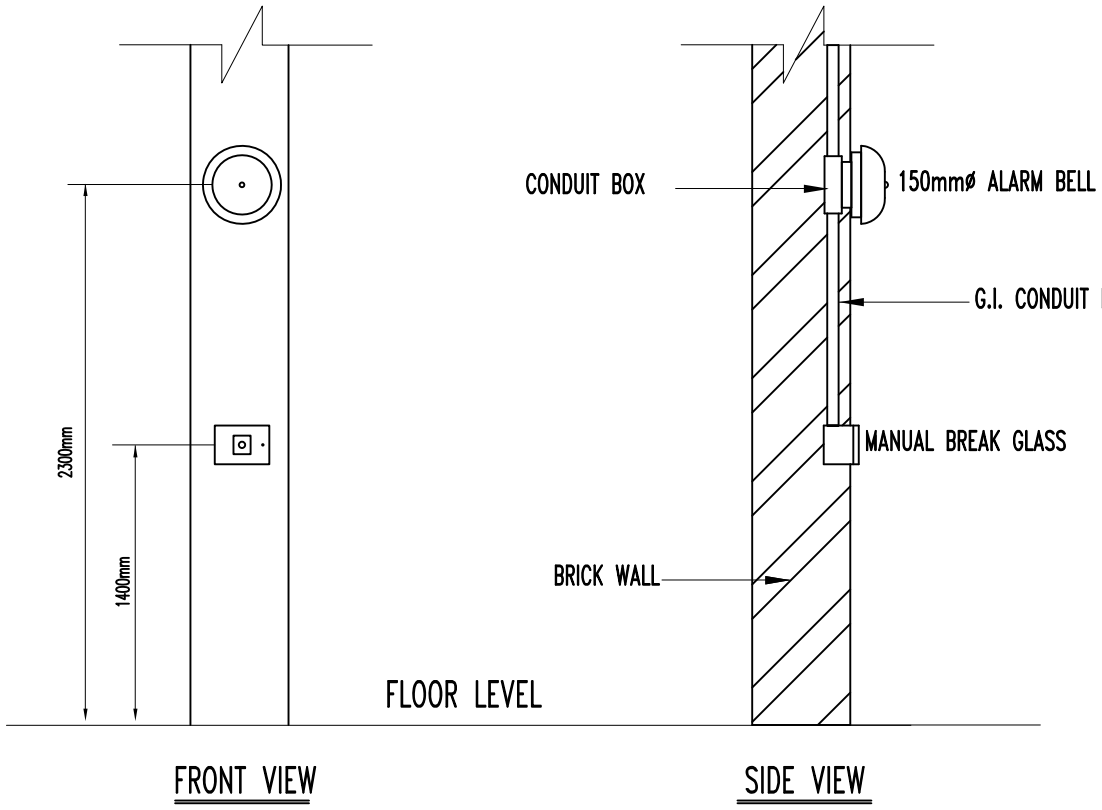

DETAIL OF ALARM BELL & BREAK GLASS POINT MOUNTING

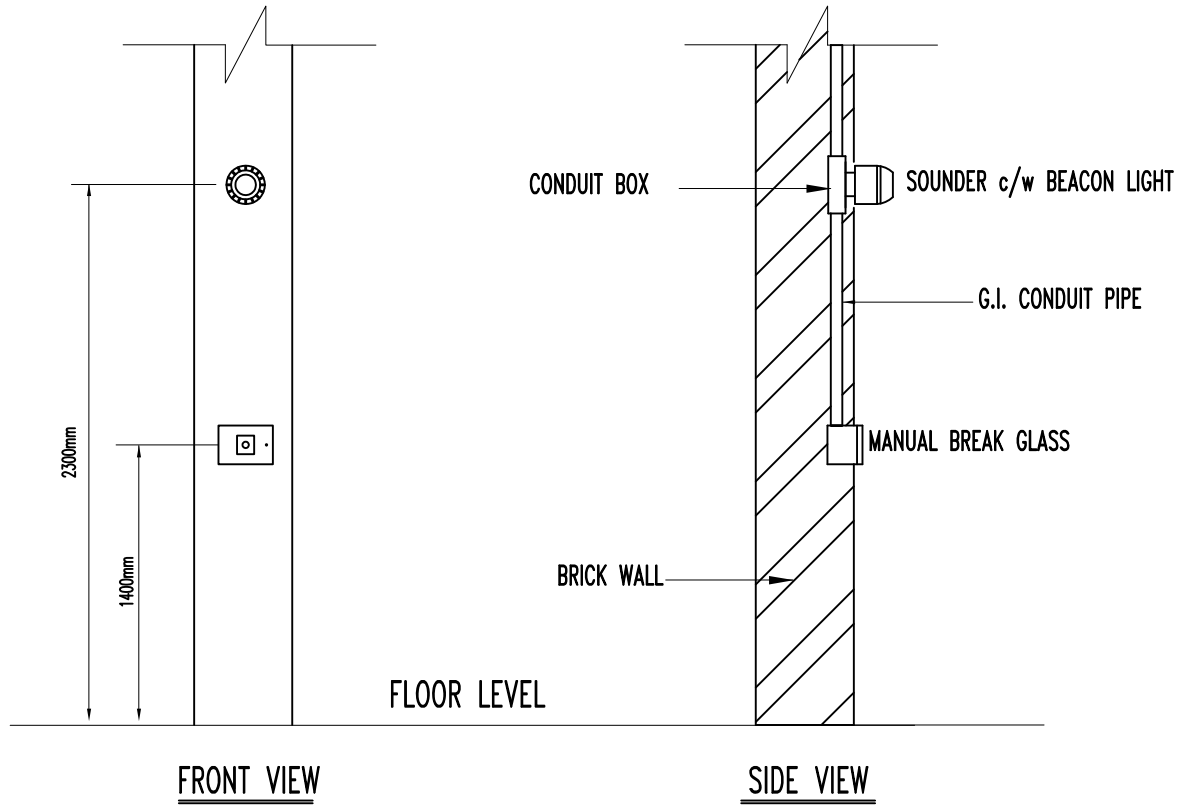

DETAIL OF SOUNDER & BREAK GLASS POINT MOUNTING

JKR MEKANIKAL

JASA KEPADA RAKYAT

CAWANGAN KEJURUTERAAN MEKANIKAL
Ibu Pejabat JKR Malaysia

FIRE FIGHTING SYSTEM

DETAIL OF ALARM BELL AND BREAK GLASS INSTALLATION

DATE	SCALE
2017	NTS

DRAWING NUMBER
CKM.BPK/STD/FF/FIRE ALARM/REV2017/02

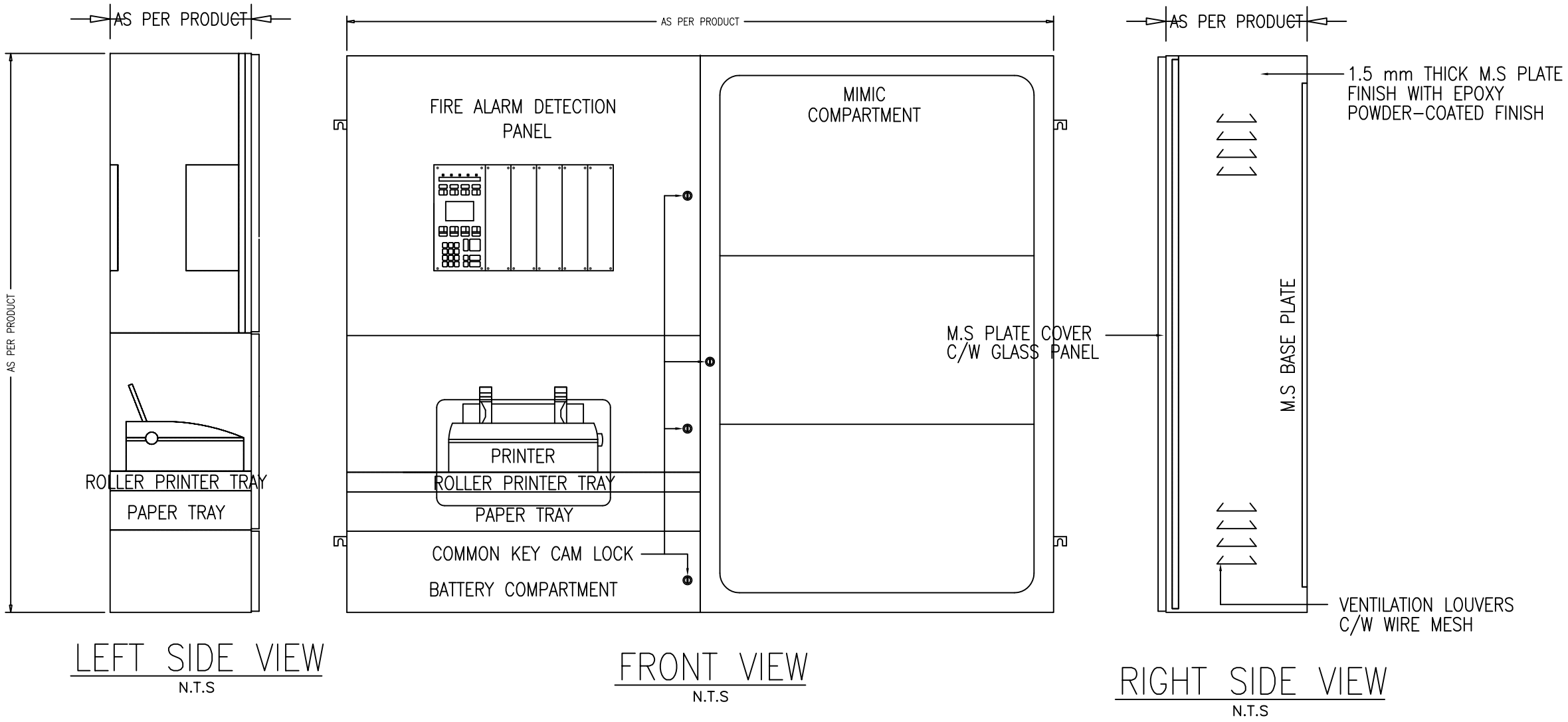

TYPICAL MAIN FIRE ALARM PANEL(ADDRESSABLE)

JASA KEPADA RAKYAT

CAWANGAN KEJURUTERAAN MEKANIKAL
Ibu Pejabat JKR Malaysia

FIRE FIGHTING SYSTEM

TYPICAL ADDRESSABLE FIRE ALARM PANEL

DATE	SCALE
2017	NTS

DRAWING NUMBER
CKM.BPK/STD/FF/FIRE ALARM/REV2017/03

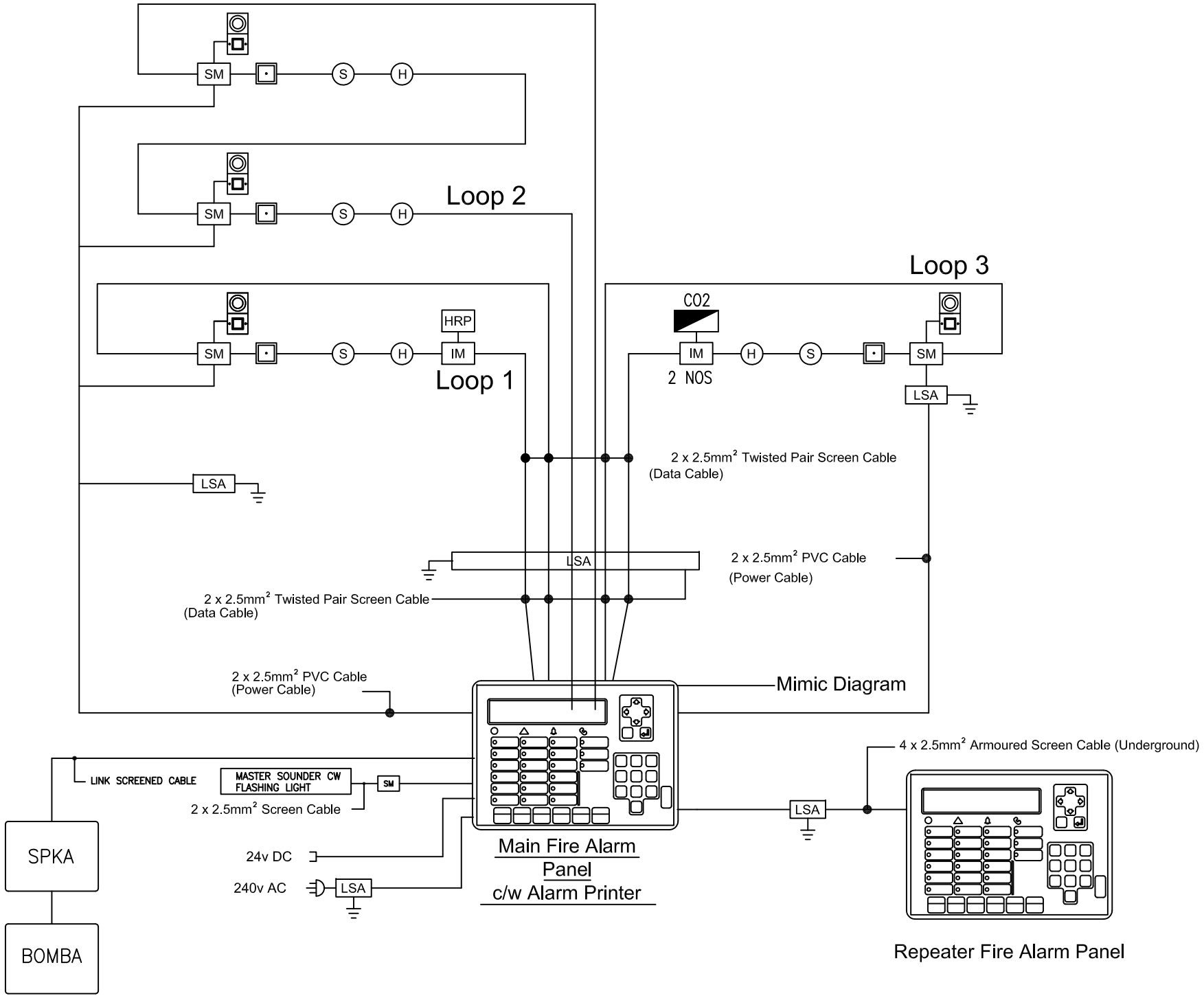

TYPICAL SCHEMATIC LINE DIAGRAM OF ADDRESSABLE FIRE ALARM SYSTEM

LEGEND

SM	Addressable Sounder c/w Flashing Light Module
LSA	Lightning Surge Arrestor
IM	Addressable Input Module
SPKA	Sistem Pengawasan Kebakaran Automatik
HRP	Hose Reel Pump
BG	Break Glass
S	Smoke Detector
H	Heat Detector
	Sounder c/w Flashing Light
CO2	CO2 Panel

JASA KEPADA RAKYAT

CAWANGAN KEJURUTERAAN MEKANIKAL
Ibu Pejabat JKR Malaysia

FIRE FIGHTING SYSTEM

TYPICAL SCHEMATIC DIAGRAM FOR ADDRESSABLE FIRE ALARM PANEL

DATE	SCALE
2017	NTS

DRAWING NUMBER
CKM.BPK/STD/FF/FIRE ALARM/REV2017/04

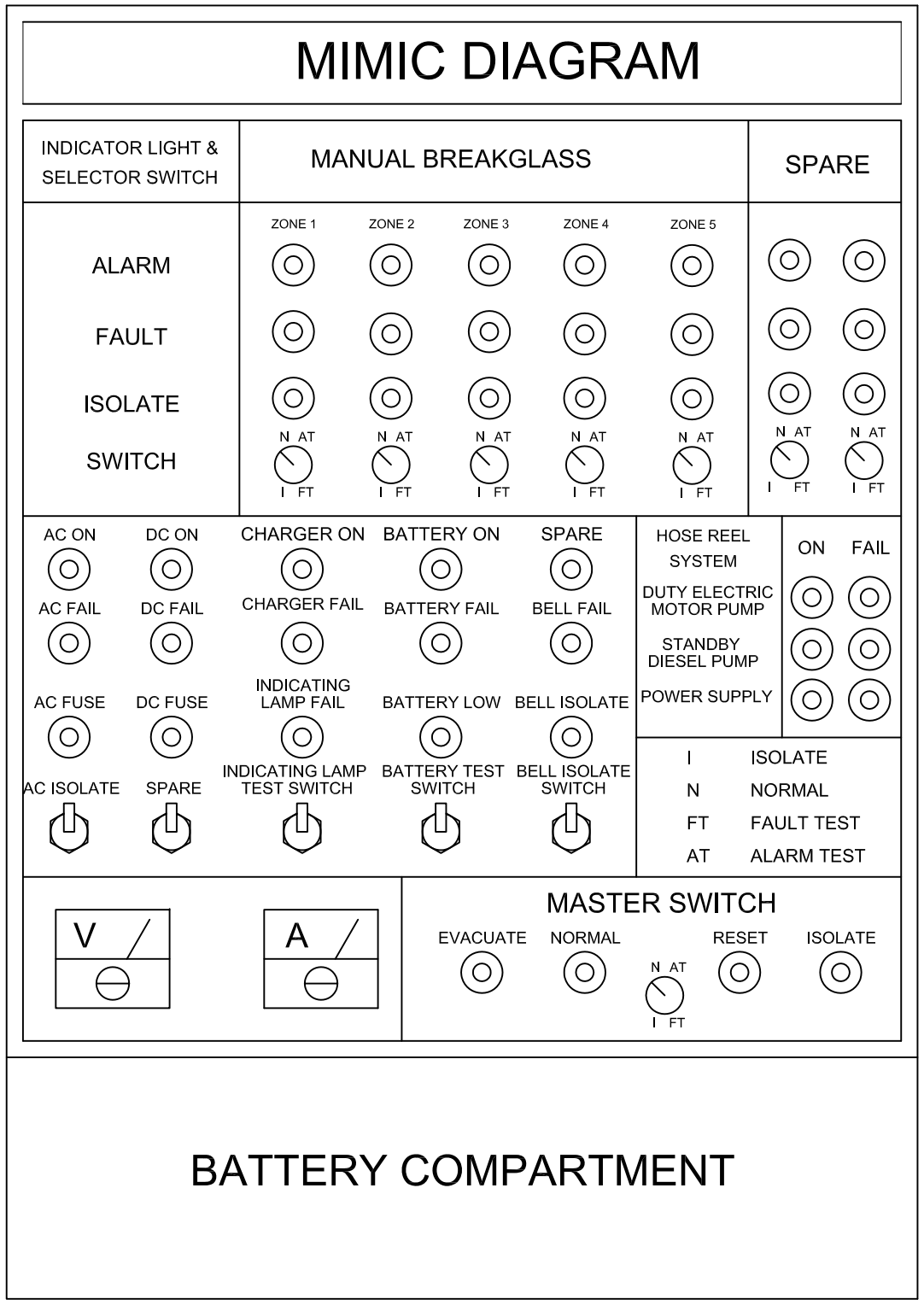

TYPICAL CONVENTIONAL FIRE ALARM PANEL

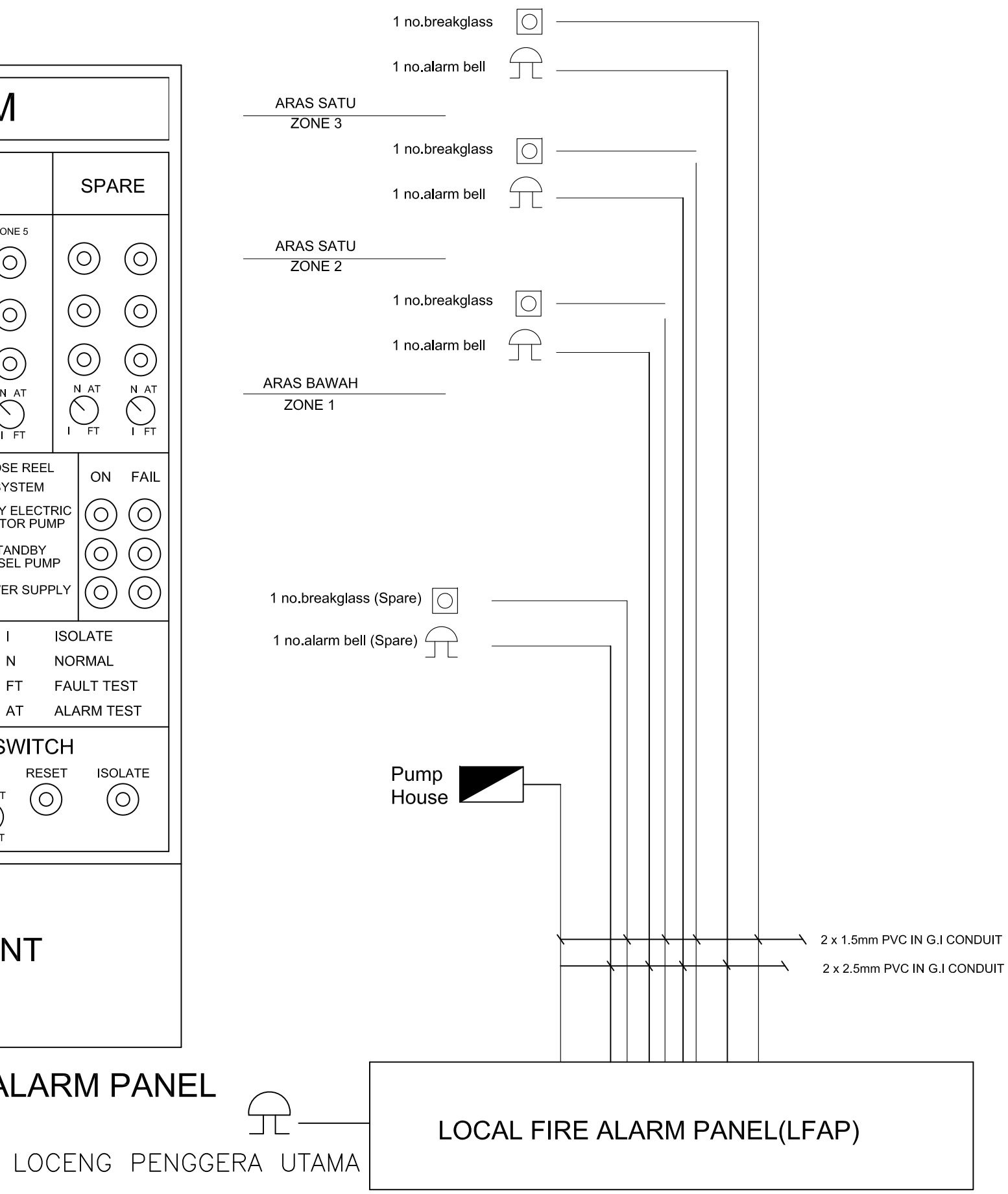

TYPICAL SCHEMATIC DIAGRAM FAP

LEGEND

- SELECTOR SWITCH
- SELECTOR SWITCH (N AT / I FT)
- INDICATING LIGHT
- A — AMMETER
- V — VOLTMETER
- ALARM BELL
- H — HEAT DETECTOR
- BREAK GLASS
- PUSH BUTTON
- SWITCH BOARD

JKR MEKANIKAL

JASA KEPADA RAKYAT

CAWANGAN KEJURUTERAAN MEKANIKAL
Ibu Pejabat JKR Malaysia

FIRE FIGHTING SYSTEM

TYPICAL CONVENTIONAL FIRE ALARM PANEL

DATE	SCALE
2017	NTS

DRAWING NUMBER
CKM.BPK/STD/FF/FIRE ALARM/REV2017/05

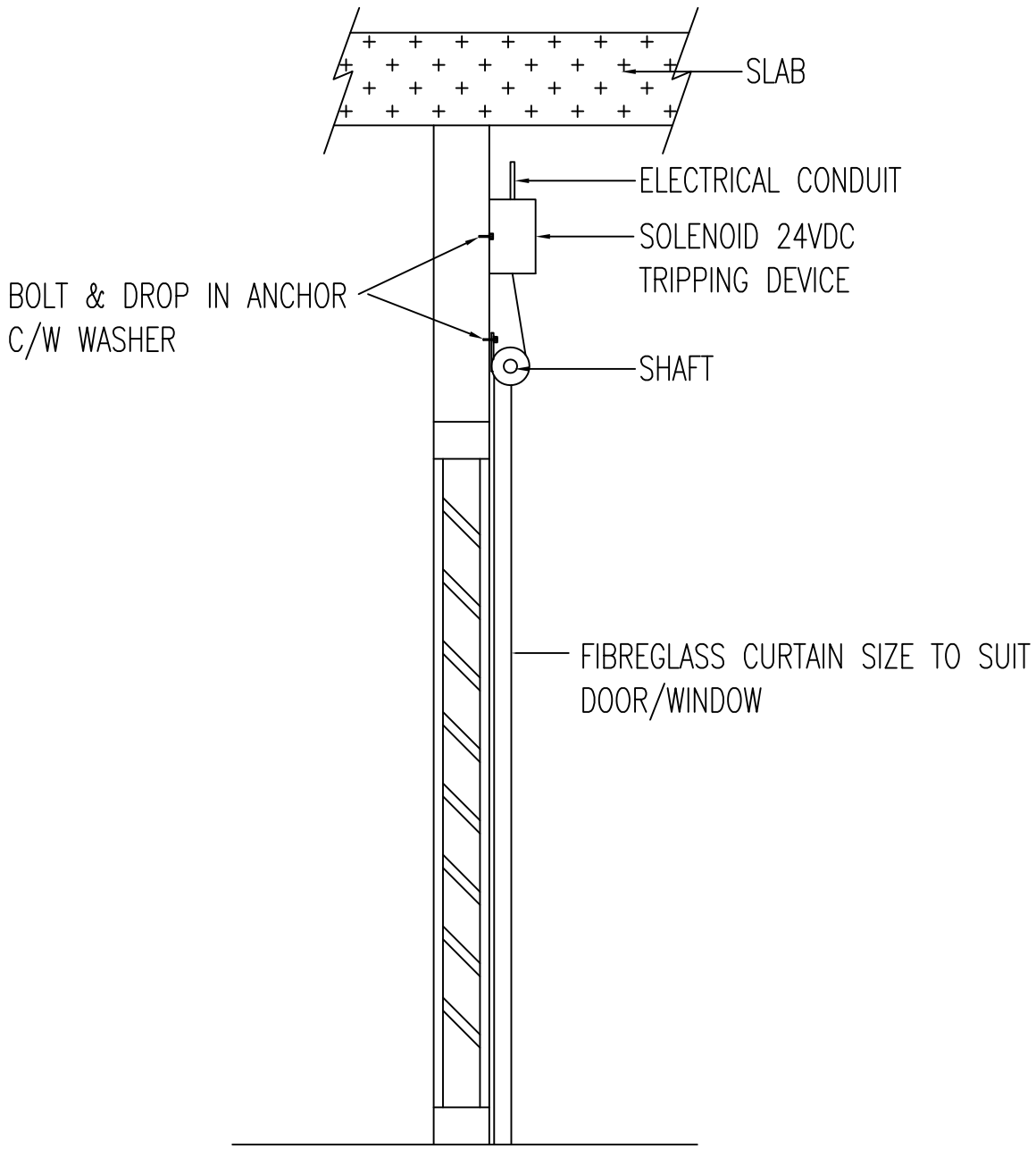

SIDE ELEVATION

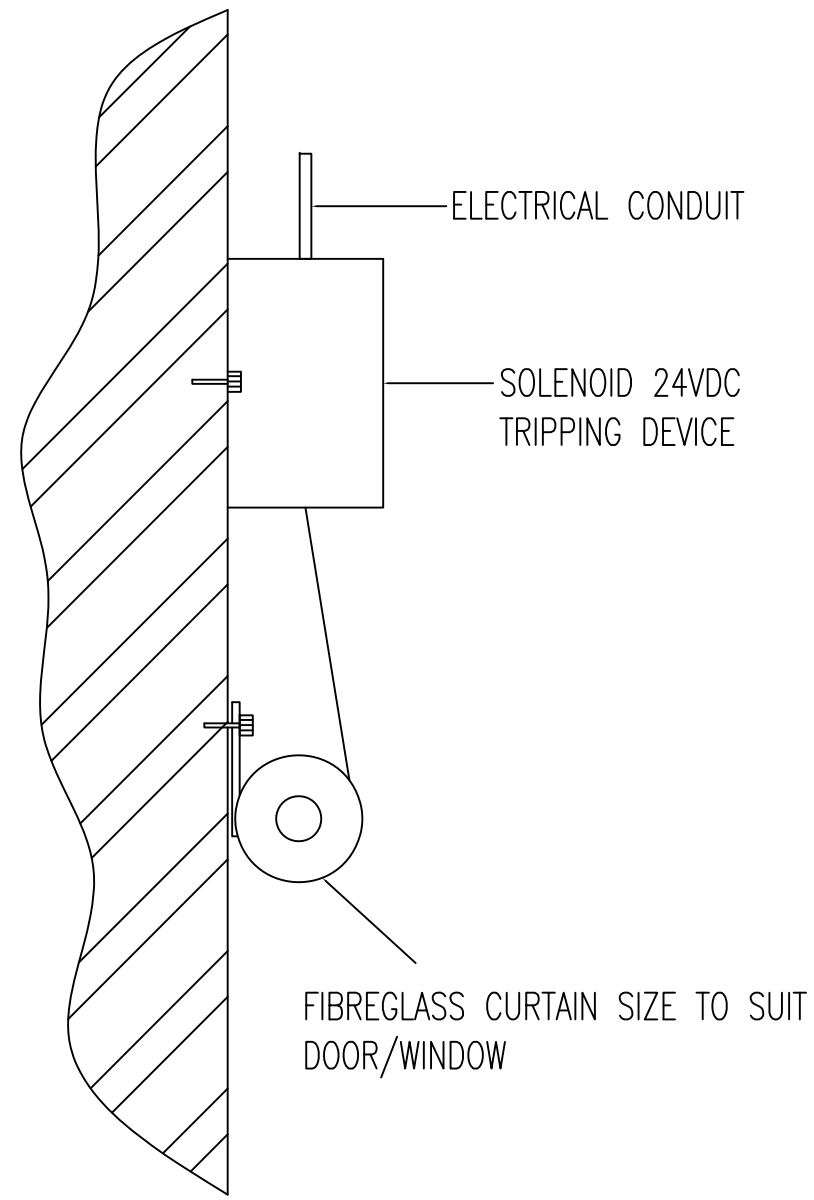

ASSEMBLY DRAWING

DETAIL OF FIRE CURTAIN

JKR MEKANIKAL

JASA KEPADA RAKYAT

CAWANGAN KEJURUTERAAN MEKANIKAL
Ibu Pejabat JKR Malaysia

FIRE FIGHTING SYSTEM

DETAIL OF FIRE CURTAIN

DATE	SCALE
2017	NTS

DRAWING NUMBER
CKM/STD/FF/FIRE CURTAIN/REV2017/01

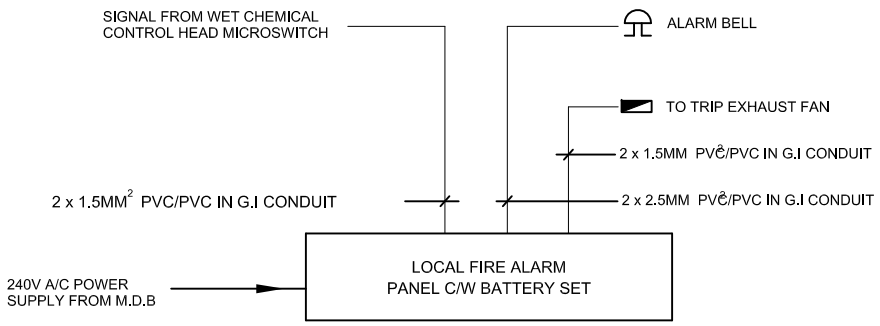

LINE DIAGRAM FOR WET CHEMICAL CONTROL BOX AND FIRE ALARM PANEL

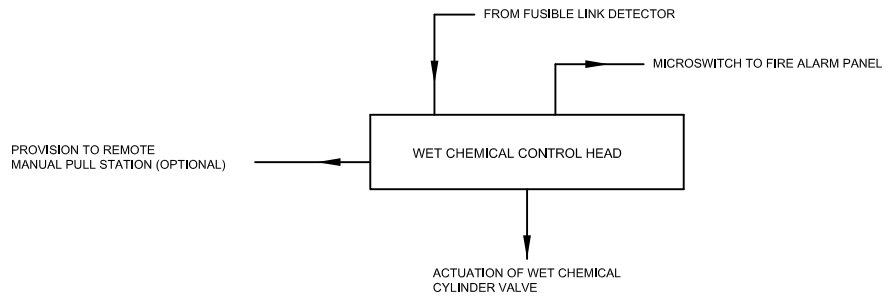

LEGEND (WET CHEMICAL) :

- PLENUM NOZZLE
- DUCT NOZZLE
- APPLIANCE NOZZLE
- HEAT DETECTOR

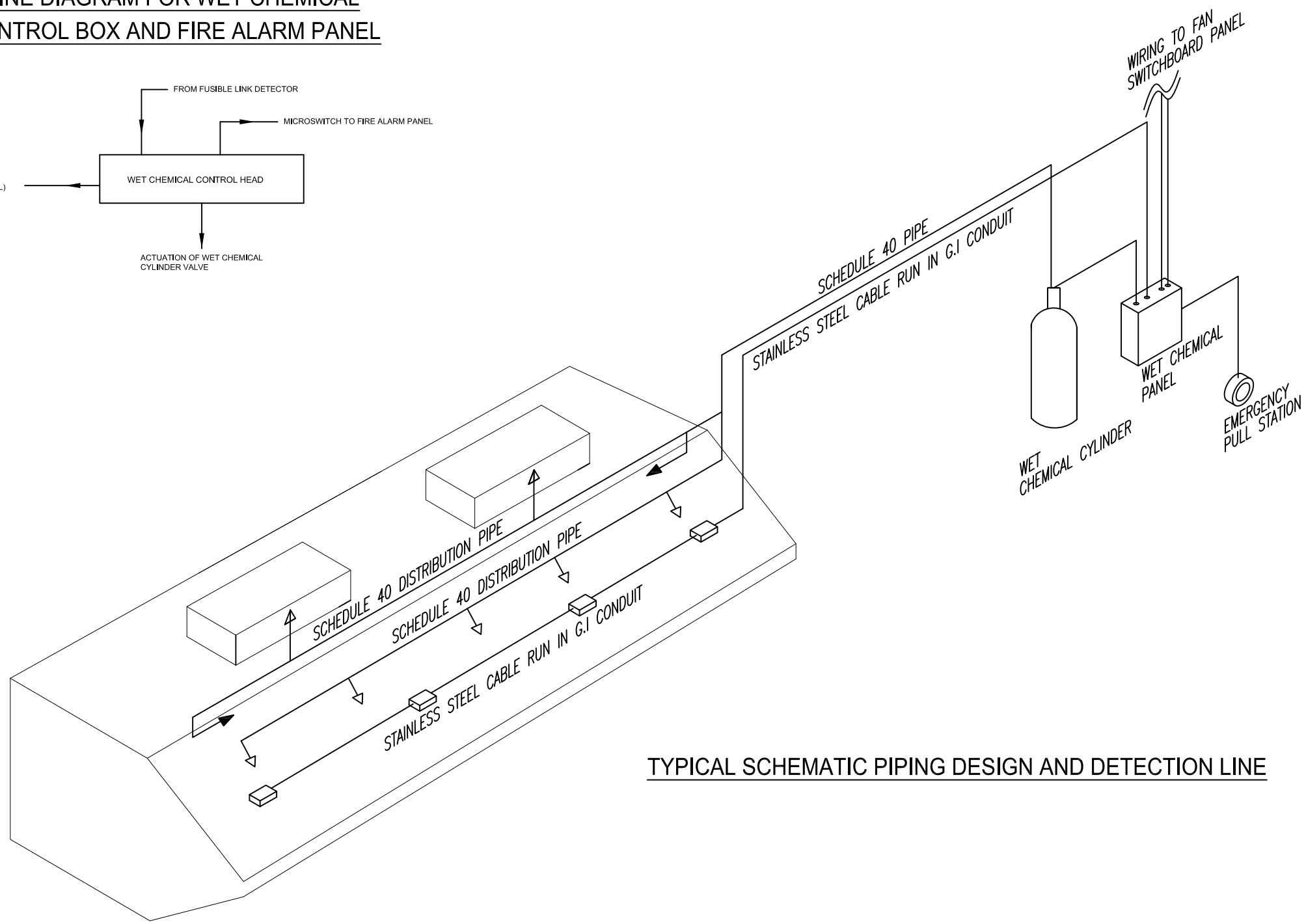

TYPICAL SCHEMATIC PIPING DESIGN AND DETECTION LINE

JKR MEKANIKAL

JASA KEPADA RAKYAT

CAWANGAN KEJURUTERAAN MEKANIKAL
Ibu Pejabat JKR Malaysia

FIRE FIGHTING SYSTEM

DETAIL OF WET CHEMICAL SYSTEM

DATE	SCALE
2017	NTS

DRAWING NUMBER
CKM/STD/FF/WET CHEMICAL/REV2017/01

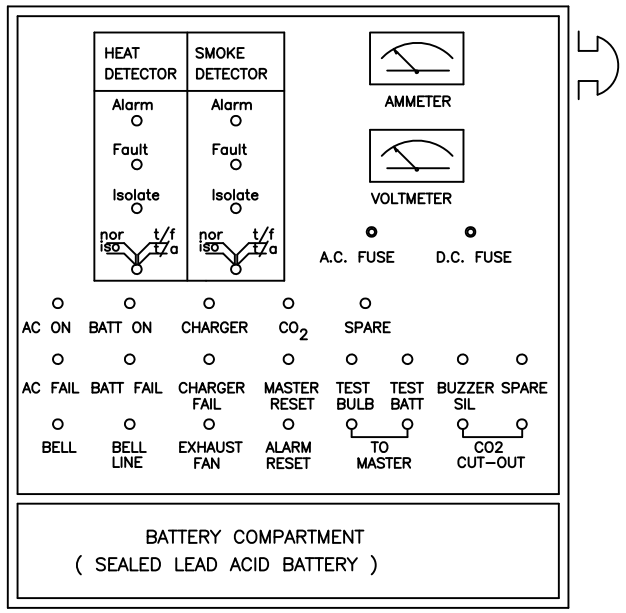

TYPICAL CONTROL PANEL DIAGRAM – 2 ZONE

LEGEND FOR SYSTEM

- ALARM BELL
- HEAT DETECTOR
- SMOKE DETECTOR
- MANUAL KEY SWITCH
- INDICATING LIGHT
- CO2 CONTROL PANEL (IP54)

} FLUSH MOUNTED

- DISCHARGE NOZZLE
- EXHAUST FAN
- FIRE CURTAIN

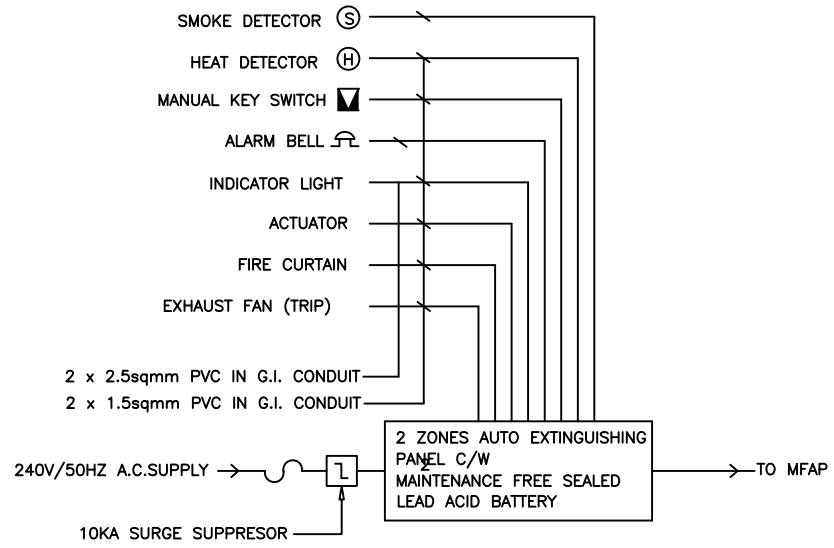

TYPICAL 2 ZONE AUTO EXTINGUISHING FIRE SUPPRESSION SYSTEM

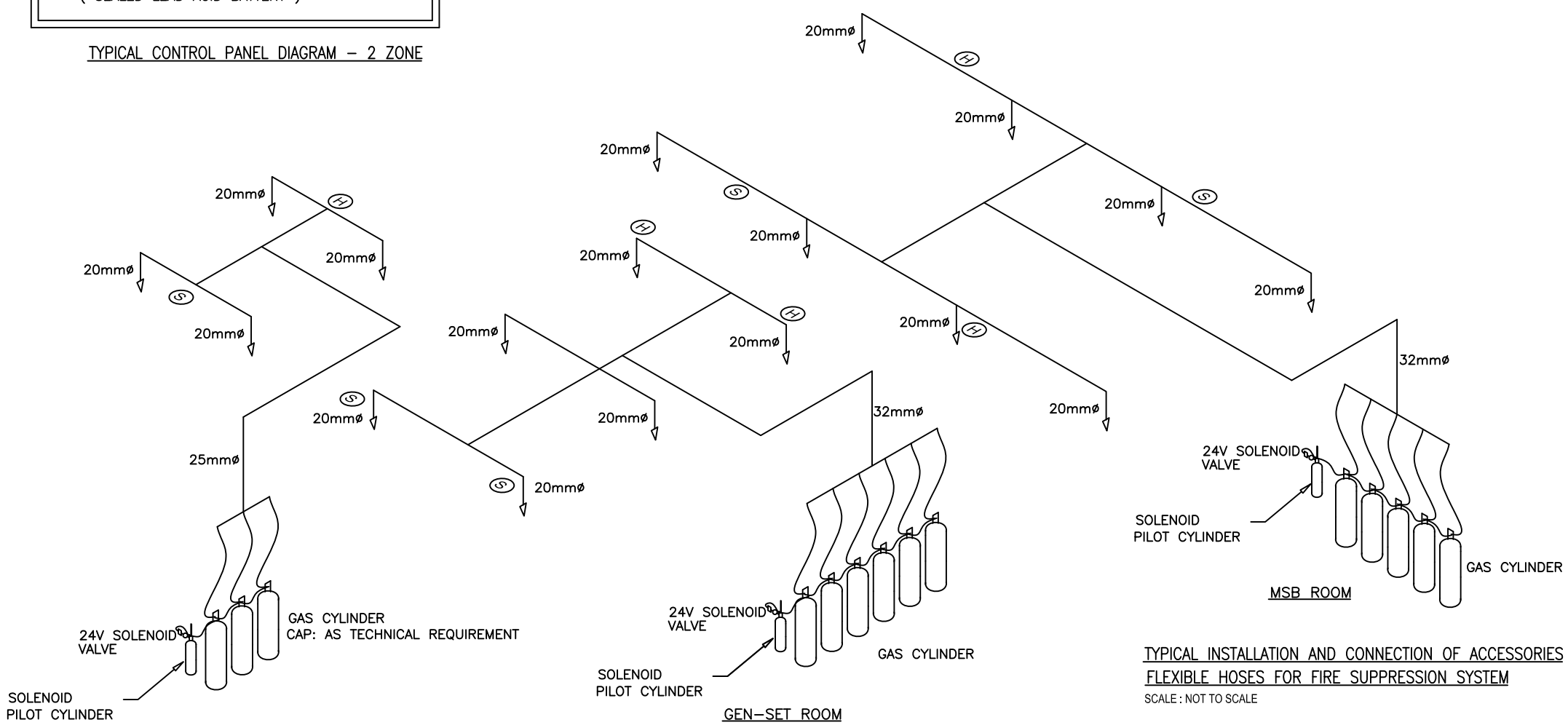

TYPICAL INSTALLATION AND CONNECTION OF ACCESSORIES FLEXIBLE HOSES FOR FIRE SUPPRESSION SYSTEM

SCALE : NOT TO SCALE

TYPICAL INSTALLATION AND CONNECTION OF ACCESSORIES FLEXIBLE HOSES FOR FIRE SUPPRESSION SYSTEM

SCALE : NOT TO SCALE

TYPICAL INSTALLATION AND CONNECTION OF ACCESSORIES FLEXIBLE HOSES FOR FIRE SUPPRESSION SYSTEM

SCALE : NOT TO SCALE

JKR MEKANIKAL

JASA KEPADA RAKYAT

CAWANGAN KEJURUTERAAN MEKANIKAL
Ibu Pejabat JKR Malaysia

FIRE FIGHTING SYSTEM

TYPICAL FIRE SUPPRESSION SYSTEM

DATE	SCALE
2017	NTS

DRAWING NUMBER
CKM/STD/FF/FIRE SUPPRESSION/REV2017/01

NOTE :

CONTROL STRATEGY FOR LIFT LOBBY PRESSSURISATION SYSTEM

a) UPON RECEIPT OF A FIRE SIGNAL AT THE FAN CONTROL PANEL, THE PRESSURISATION FAN SHALL AUTOMATICALLY START.

b) A FIRE SIGNAL SHALL BE SENT TO OPEN THE MOTORISED DAMPER ON THE SUPPLY DUCT TO THE LIFT LOBBY FOR THE LEVEL ON FIRE, THE LEVEL IMMEDIATELY ABOVE AND BELOW. THE MOTORISED DAMPER THE LEVEL ON FIRE, THE LEVEL IMMEDIATELY ABOVE AND BELOW. THE MOTORISED DAMPER ON ALL OTHER LEVELS SHALL REMAIN CLOSED.

c) A DIFFERENTIAL SENSOR IN THE AIR SHAFT (INSTALLED AT 2/3 DISTANCE DOWN THE AIR SHAFT) SHALL SENSE THE TOTAL AIR DEMAND AND MODULATE A MOTORISED PRESSURE RELIEF DAMPER (PRD) LOCATED ON THE DUCT AT THE FAN DISCHARGE TO MAINTAIN THE REQUIRED AIR DEMAND.

d) A PRESSURE RELIEF DAMPER INSTALLED ON THE WALL BETWEEN THE LIFT LOBBY AND THE ADJACENT UNPRESSURISED SPACE AT EACH LIFT LOBBY SHALL BE SET TO MAINTAIN A DIFFERENTIAL PRESSURE OF 50 Pa BETWEEN THE LIFT LOBBY AND ADCENT UNPRESSURISED SPACE.

ALL PRESSURISATION SHALL BE LINKED TO A REMOTE START–STOP PANEL LOCATED AT THE FIRE CONTROL ROOM WHERE THE FAN CAN BE STARTED, STOPPED AND THE "RUN" & "TRIP" STATUS CAN BE MONITORED.

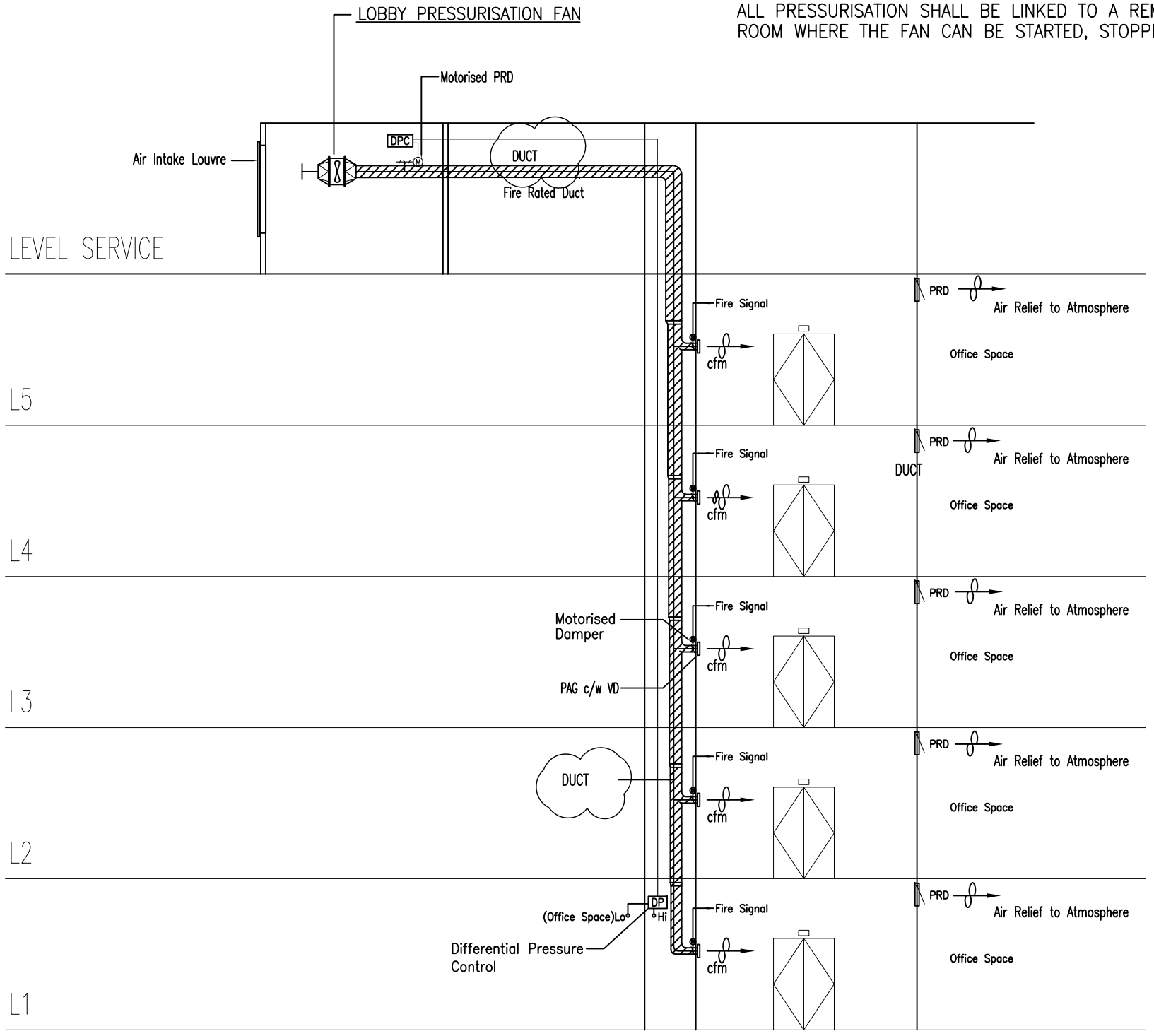

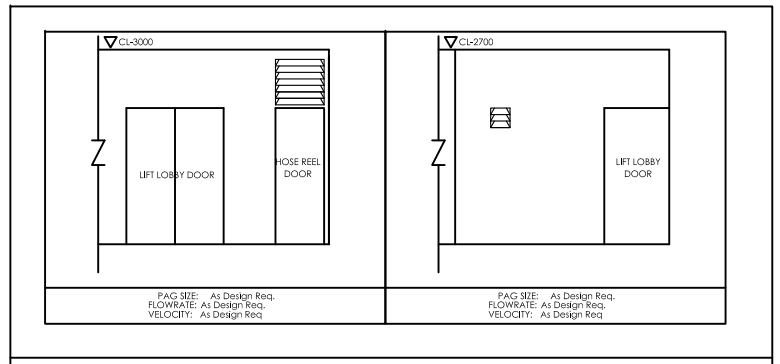

PROPOSED PRESSURIZATION LIFT LOBBY GRILLE SIZE AND LOCATION AT OFFICE LEVEL

TYPICAL SCHEMATIC LIFT LOBBY PRESSURIZATION SYSTEM

LEGEND :

- PRD — PRESSURE RELIEF DAMPER (MOTORISED)
- PRD — PRESSURE RELIEF DAMPER (COUNTER WEIGHT)
- MOTORISED DAMPER
- DP — Hi Lo — DIFFERENTIAL PRESSURE SENSOR C/W COPPER TUBING
- DPC — DIFFERENTIAL PRESSURE CONTROLLER

JKR MEKANIKAL

JASA KEPADA RAKYAT

CAWANGAN KEJURUTERAAN MEKANIKAL
Ibu Pejabat JKR Malaysia

FIRE FIGHTING SYSTEM

TYPICAL PRESSURIZATION SYSTEM(LOBBY)

DATE	SCALE
2017	NTS

DRAWING NUMBER
CKM/STD/FF/PRESSURIZATION/REV2017/01

NOTE :

CONTROL STRATEGY FOR STAIRCASE PRESSSURISATION SYSTEM

a) UPON RECEIPT OF A FIRE SIGNAL AT THE FAN CONTROL PANEL, THE PRESSURISATION FAN SHALL AUTOMATICALLY START.

b) A DIFFERENTIAL SENSOR (INSTALLED AT 2/3 DISTANCE DOWN THE STAIRCASE) SHALL MEASURE THE PRESSURE DIFFERENTIAL BETWEEN THE STAIRCASE AND THE ADJACENT UNPRESSURISED SPACE.

c) THE MEASURED PRESSURE DIFFERENTIAL SHALL BE USED TO MODULATE A MOTORISED PRESSURE RELIEF DAMPER (PRD) LOCATED ON THE DUCT AT THE FAN DISCHARGE TO MAINTAIN A PRESSURE DIFFERENTIAL OF 50Pa BETWEEN THE STAIRCASE AND THE ADJACENT UNPRESSURIED SPACE.

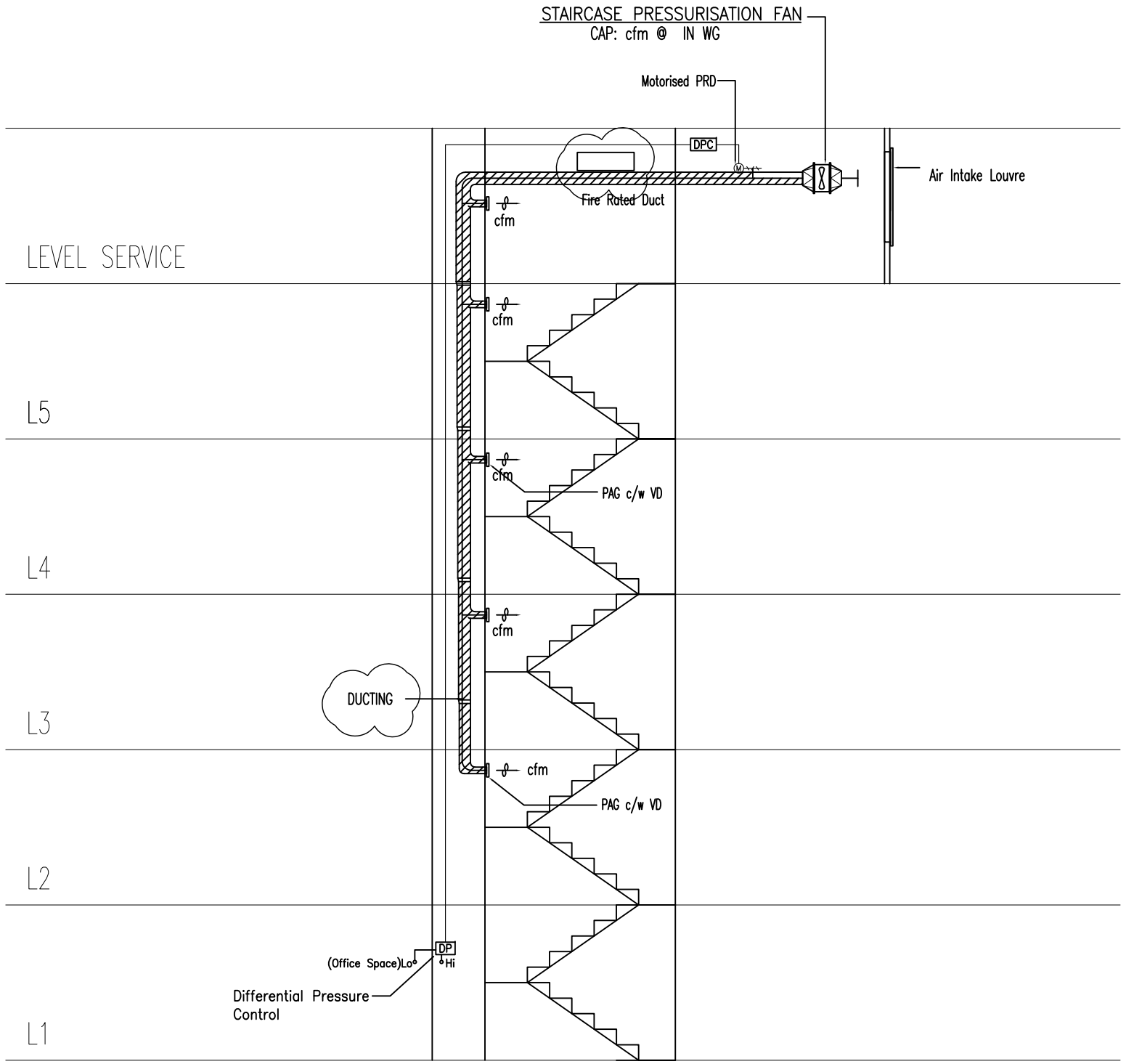

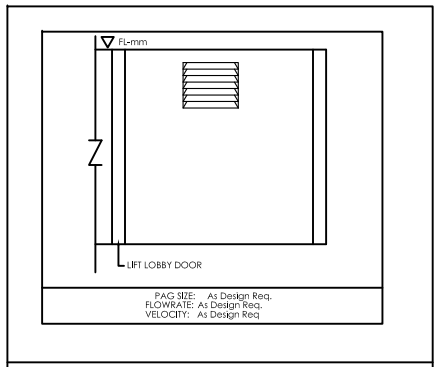

TYPICAL PRESSURIZATION LIFT LOBBY GRILL SIZE AND LOCATION AT STAIRCASE

TYPICAL SCHEMATIC STAIRCASE PRESSURIZATION SYSTEM

LEGEND :

- PRD — PRESSURE RELIEF DAMPER (MOTORISED)
- PRD — PRESSURE RELIEF DAMPER (COUNTER WEIGHT)
- MOTORISED DAMPER
- DP — Hi Lo — DIFFERENTIAL PRESSURE SENSOR C/W COPPER TUBING
- DPC — DIFFERENTIAL PRESSURE CONTROLLER
- PAG c/w VD — PRESSURE AIR GRILLE C/W VOLUME DAMPER

JKR MEKANIKAL

JASA KEPADA RAKYAT

CAWANGAN KEJURUTERAAN MEKANIKAL
Ibu Pejabat JKR Malaysia

FIRE FIGHTING SYSTEM

TYPICAL PRESSURISATION SYSTEM (STAIRCASE)

DATE	SCALE
2017	NTS

DRAWING NUMBER
CKM/STD/FF/PRESURIZATION/REV2017/02

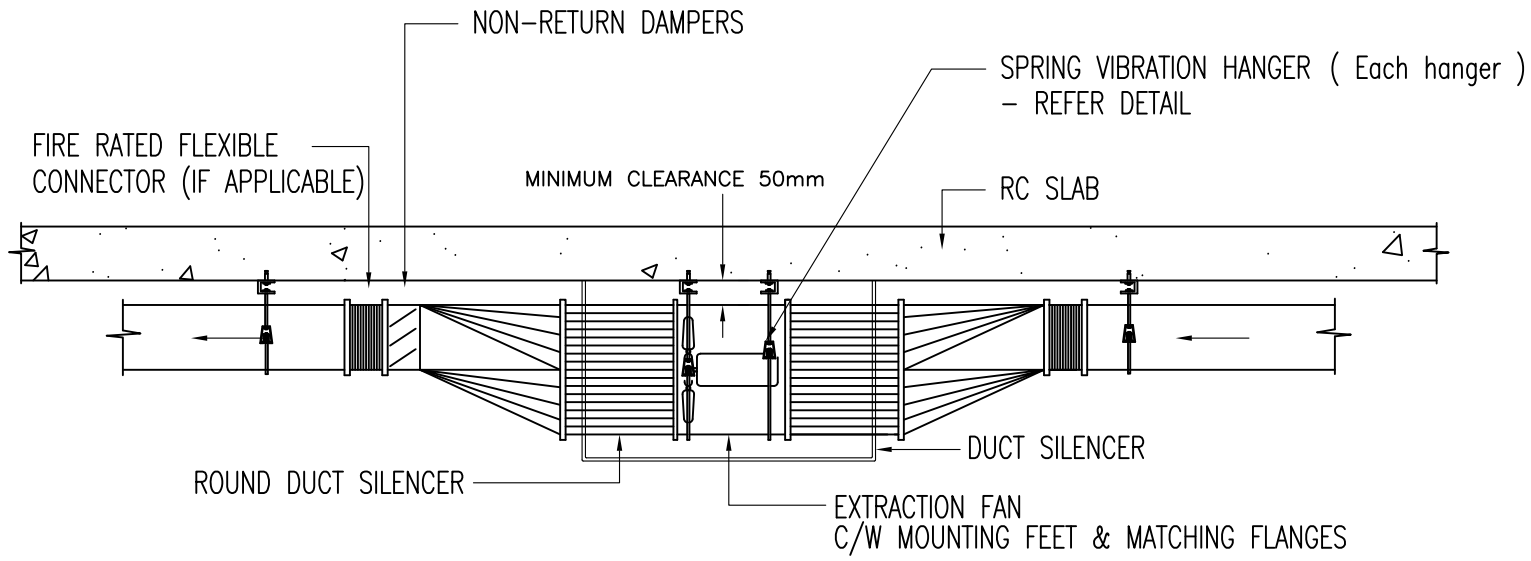

VENTILATION SUPPLY & EXHAUST FAN DETAILS WITH DUCT SILENCERS

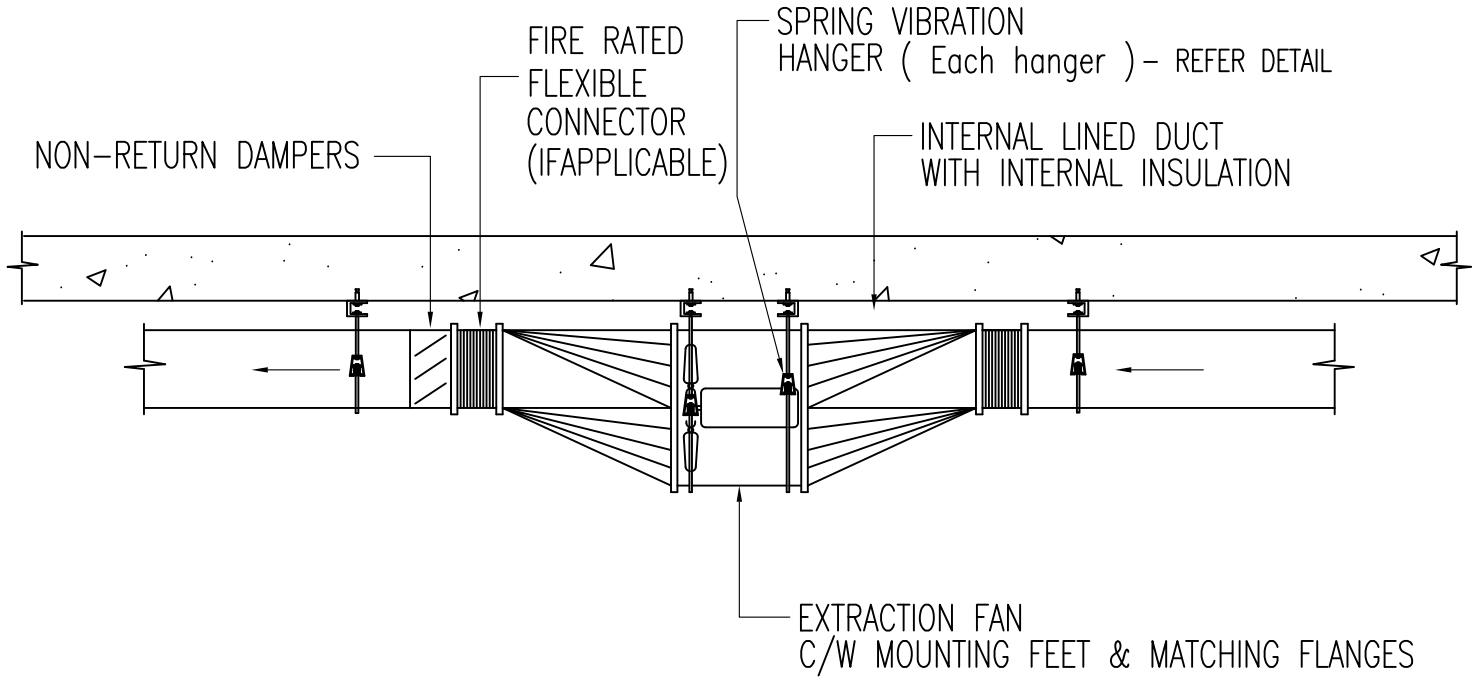

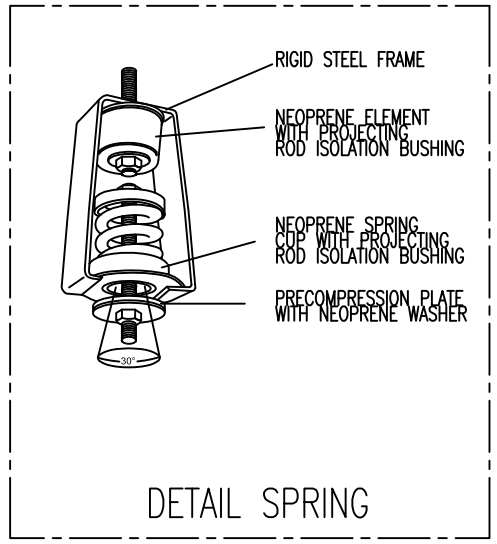

GENERAL VENTILATION FAN DETAILS

JKR MEKANIKAL

JASA KEPADA RAKYAT

CAWANGAN KEJURUTERAAN MEKANIKAL
Ibu Pejabat JKR Malaysia

FIRE FIGHTING SYSTEM

TYPICAL PRESSURISATION SYSTEM
(TYPES OF FAN INSTALLATION)

DATE	SCALE
2017	NTS

DRAWING NUMBER
CKM/STD/FF/PRESURIZATION/REV2017/03

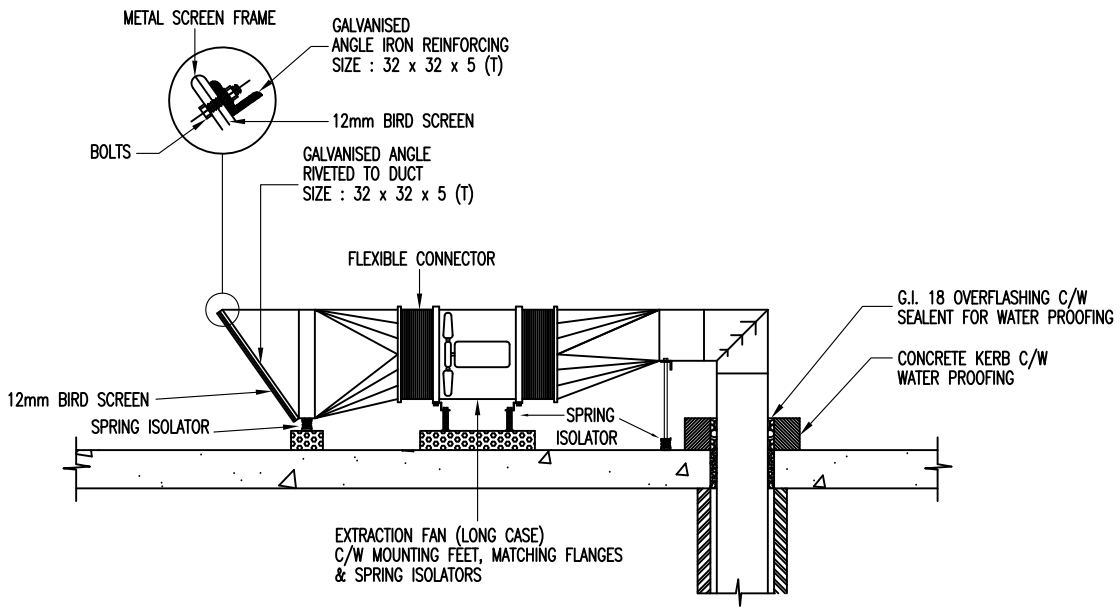

ROOF MOUNTED EXTRACTION FAN DETAILS

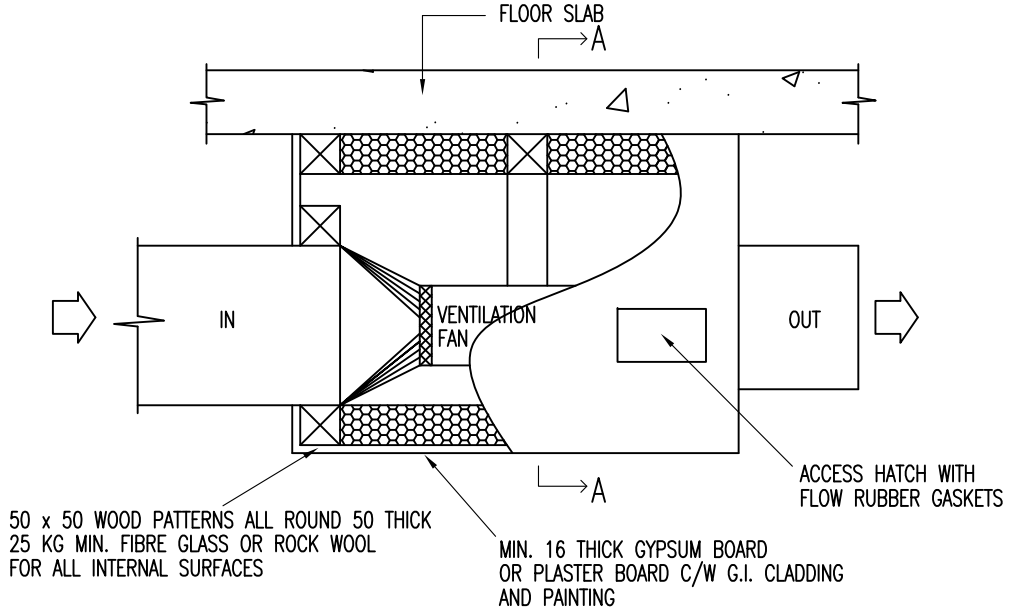

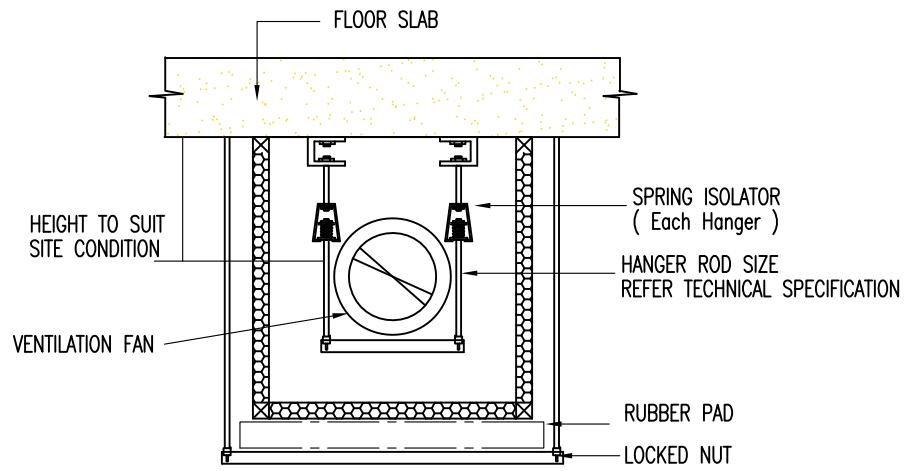

SECTION A–A

NOTE:

1. CLEARANCE MIN. 150 mm ALL ROUND THE FAN
2. ALL JOINTS AND JUNCTIONS TO BE CAULKED AIR TIGHT

TYPICAL INSTALLATION VENTILATION FAN – NOISE CONTROL DETAIL INSTALLATION

JKR MEKANIKAL

JASA KEPADA RAKYAT

CAWANGAN KEJURUTERAAN MEKANIKAL
Ibu Pejabat JKR Malaysia

FIRE FIGHTING SYSTEM

TYPICAL PRESSURISATION SYSTEM
(TYPES OF FAN INSTALLATION)

DATE	SCALE
2017	NTS

DRAWING NUMBER
CKM/STD/FF/PRESURIZATION/REV2017/04

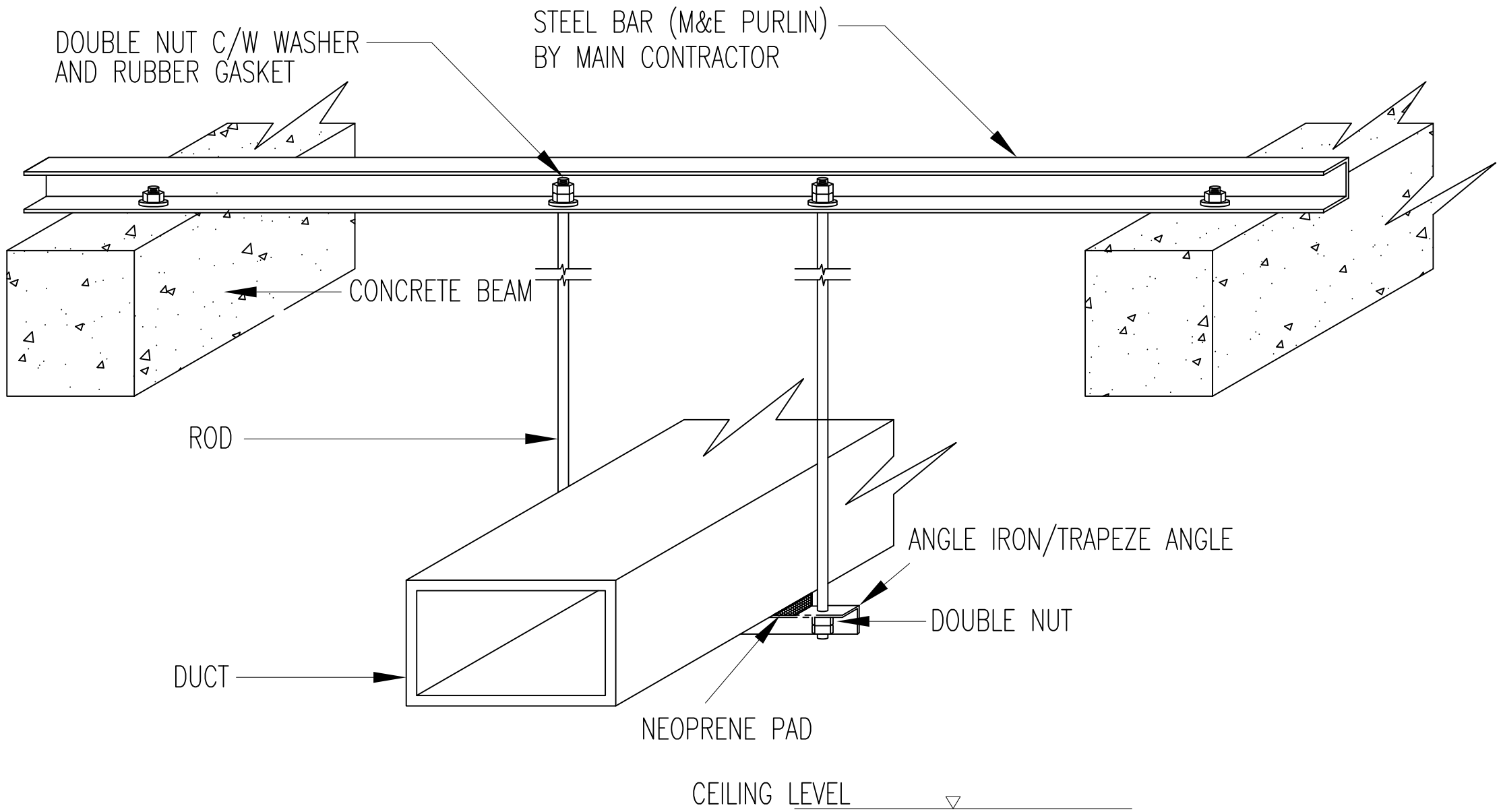

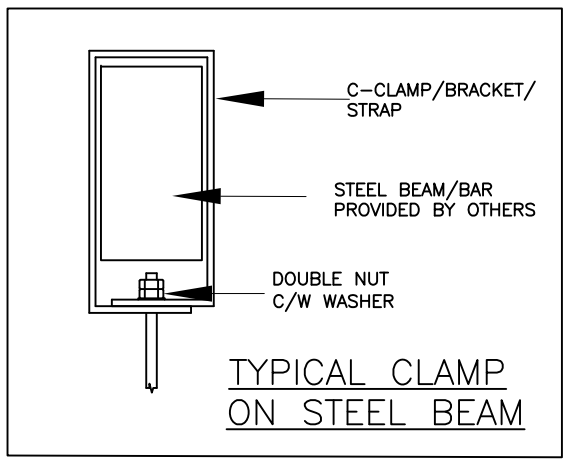

TYPICAL DUCT/ DIFFUSER SUPPORT
AND HANGER (UNDER THE ROOF)

TYPICAL DUCT SUPPORT AND HANGER (UNDER THE ROOF)

JKR MEKANIKAL

JASA KEPADA RAKYAT

CAWANGAN KEJURUTERAAN MEKANIKAL
Ibu Pejabat JKR Malaysia

FIRE FIGHTING SYSTEM

TYPICAL TYPE OF DUCT INSTALLATION

DATE	SCALE
2017	NTS

DRAWING NUMBER
CKM/STD/FF/PRESURIZATION/REV2017/05

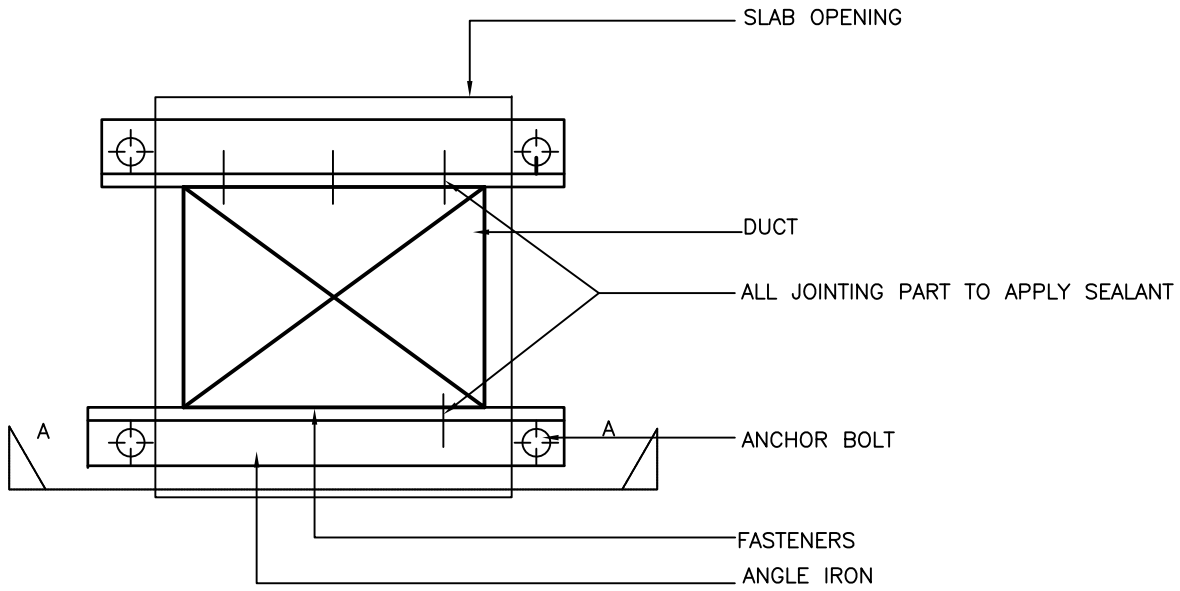

PLAN

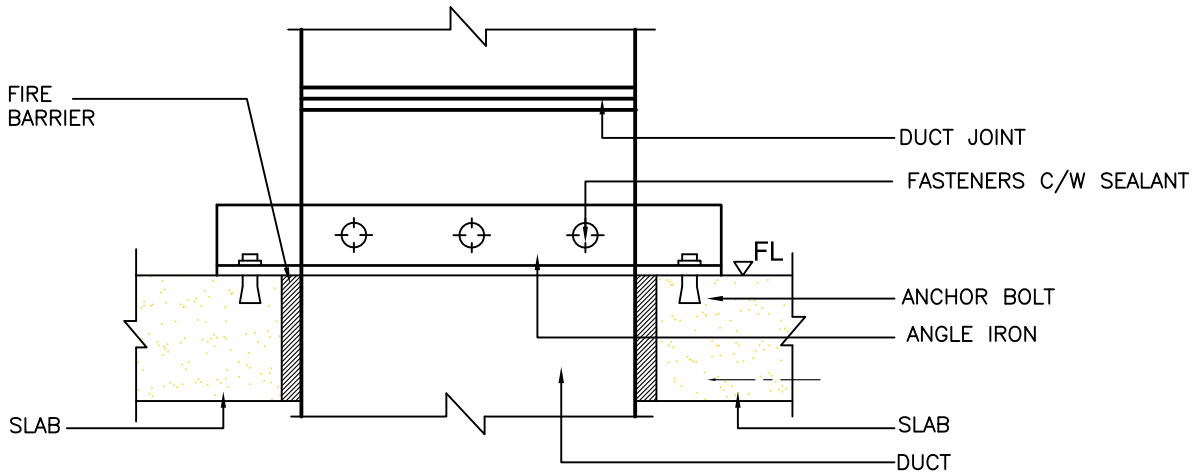

SECTION A–A

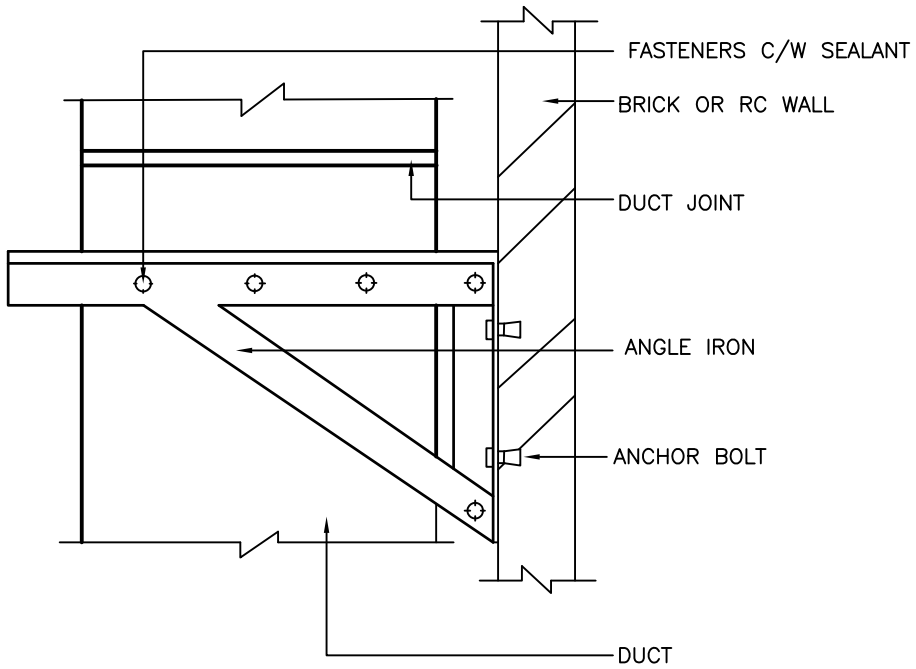

DUCT SUPPORT FOR DUCT RISER
ANCHORING INTO R.C WALL OR BRICKWALL

JKR MEKANIKAL

JASA KEPADA RAKYAT

CAWANGAN KEJURUTERAAN MEKANIKAL
Ibu Pejabat JKR Malaysia

FIRE FIGHTING SYSTEM

TYPICAL TYPE OF DUCT INSTALLATION

DATE	SCALE
2017	NTS

DRAWING NUMBER
CKM/STD/FF/PRESURIZATION/REV2017/06

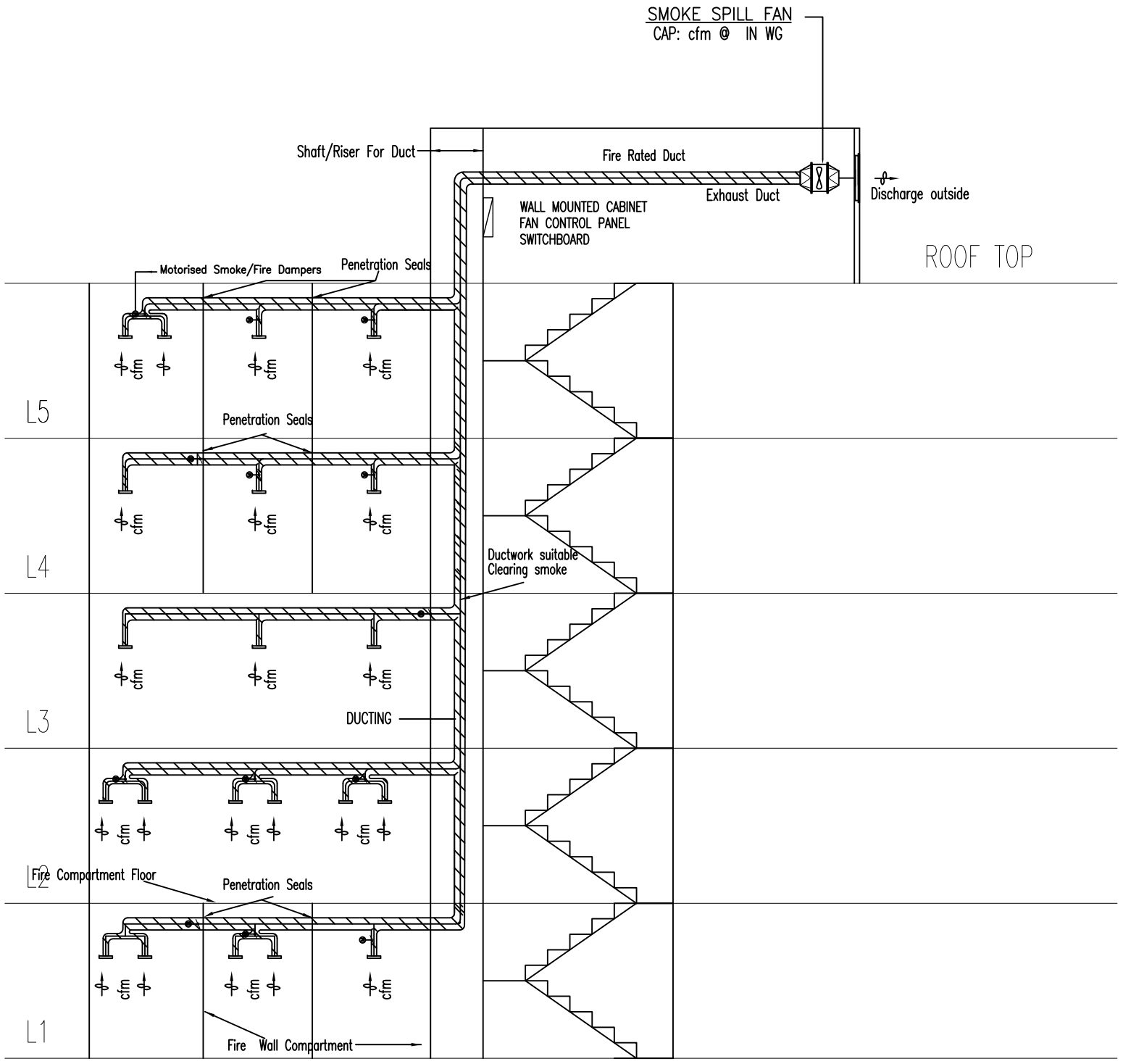

TYPICAL INSTALLATION SMOKE SPILL SYSTEM

LEGEND :

MOTORISED DAMPER

JKR MEKANIKAL

JASA KEPADA RAKYAT

CAWANGAN KEJURUTERAAN MEKANIKAL
Ibu Pejabat JKR Malaysia

FIRE FIGHTING SYSTEM

TYPICAL INSTALLATION
SMOKE SPILL SYSTEM

DATE	SCALE
2017	NTS

DRAWING NUMBER
CKM/STD/FF/SMOKE SPILL/REV2017/01

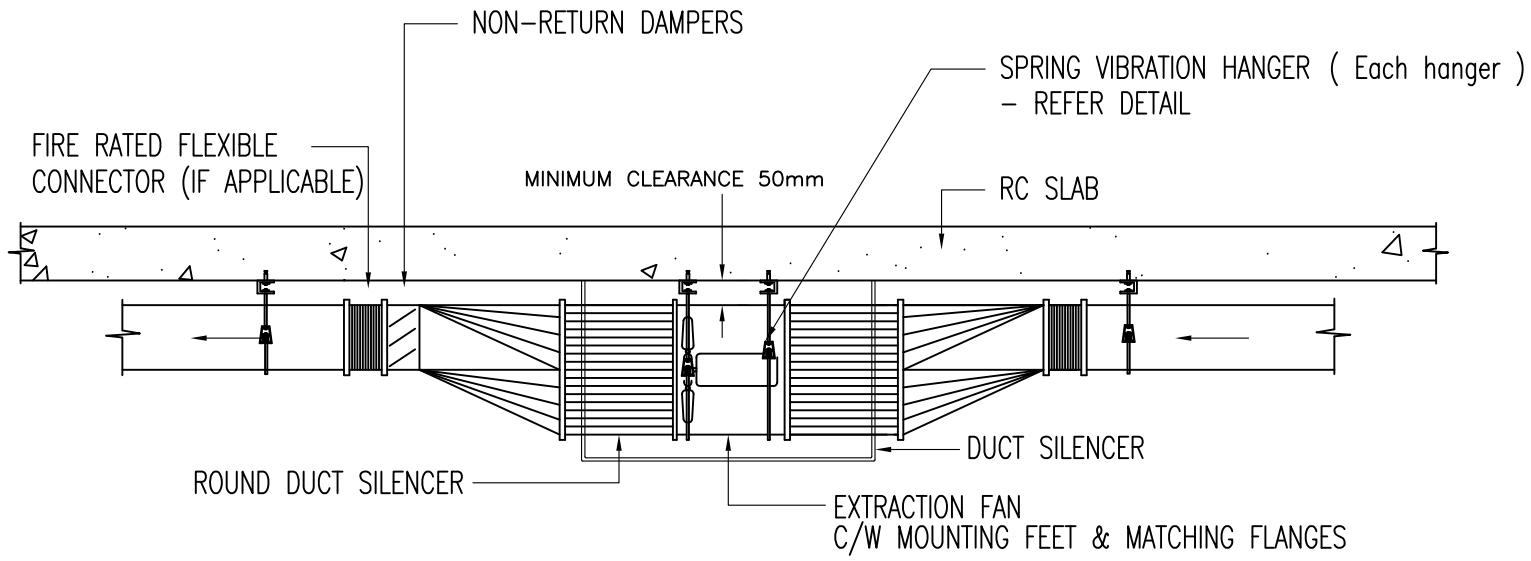

VENTILATION SUPPLY & EXHAUST FAN DETAILS WITH DUCT SILENCERS

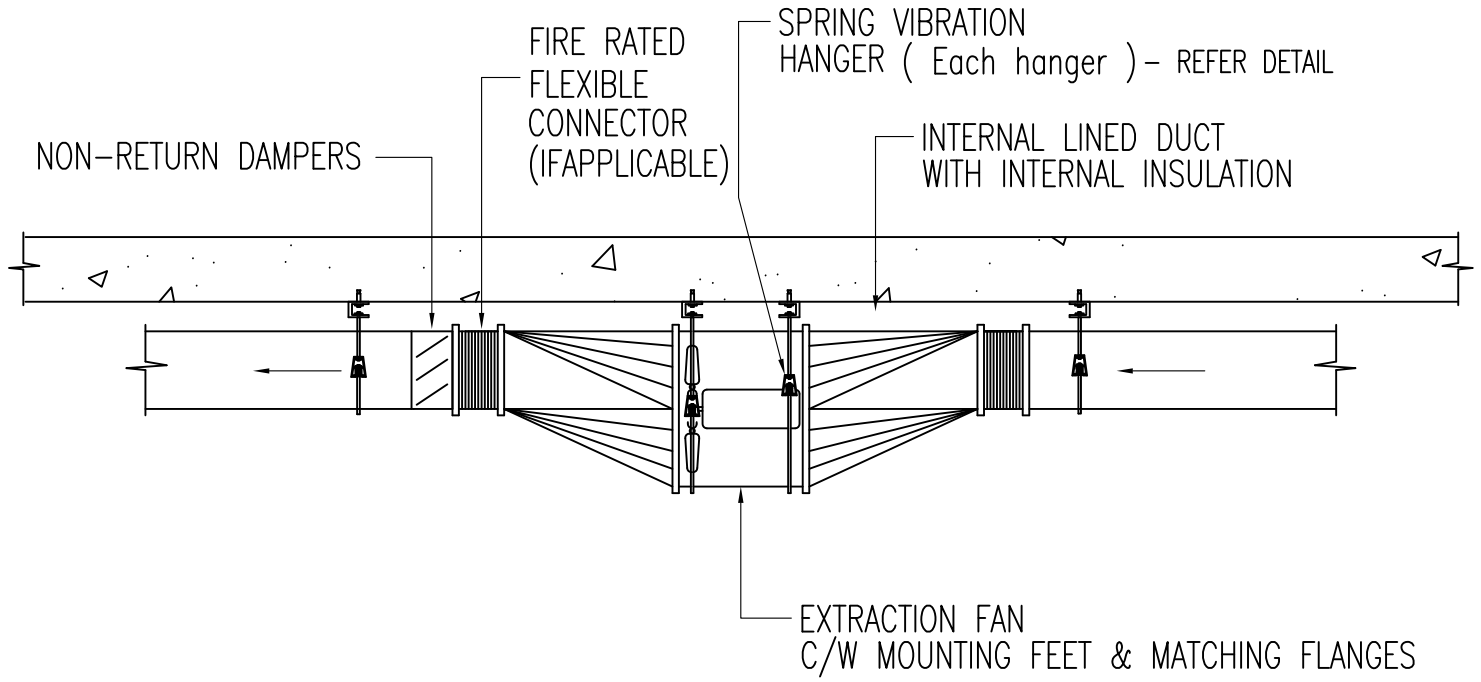

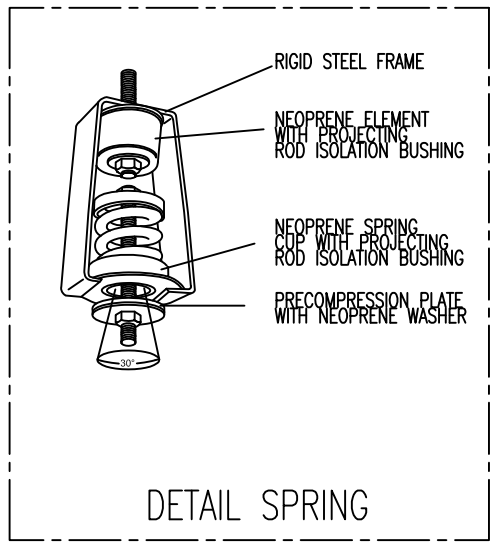

GENERAL VENTILATION FAN DETAILS

JKR MEKANIKAL

JASA KEPADA RAKYAT

CAWANGAN KEJURUTERAAN MEKANIKAL
Ibu Pejabat JKR Malaysia

FIRE FIGHTING SYSTEM

TYPICAL TYPE OF FAN INSTALLATION

DATE	SCALE
2017	NTS

DRAWING NUMBER
CKM/STD/FF/SMOKE SPILL/REV2017/02

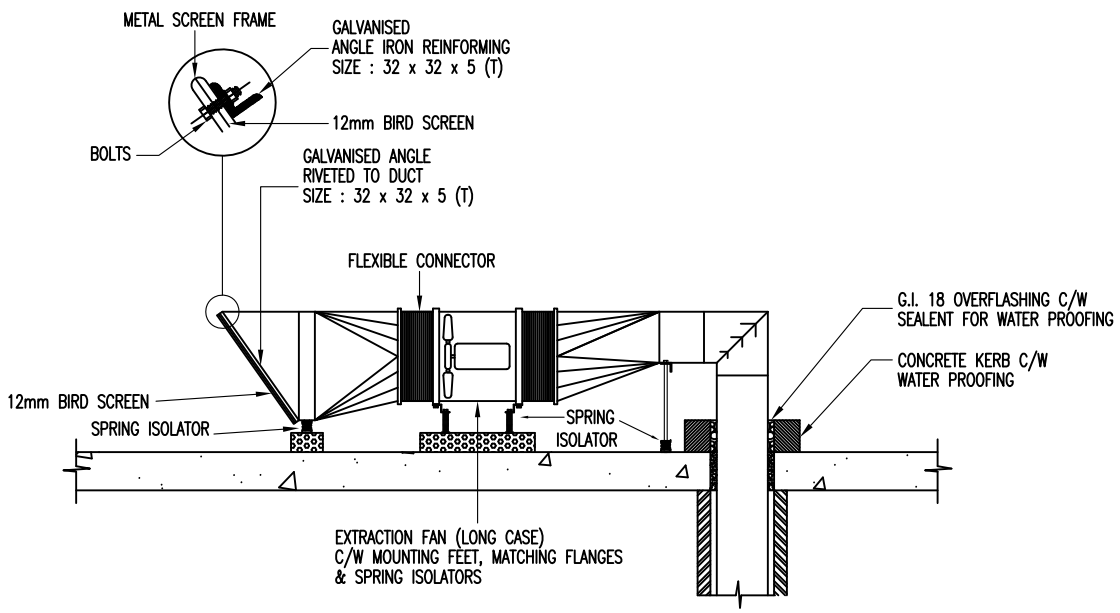

ROOF MOUNTED EXTRACTION FAN DETAILS

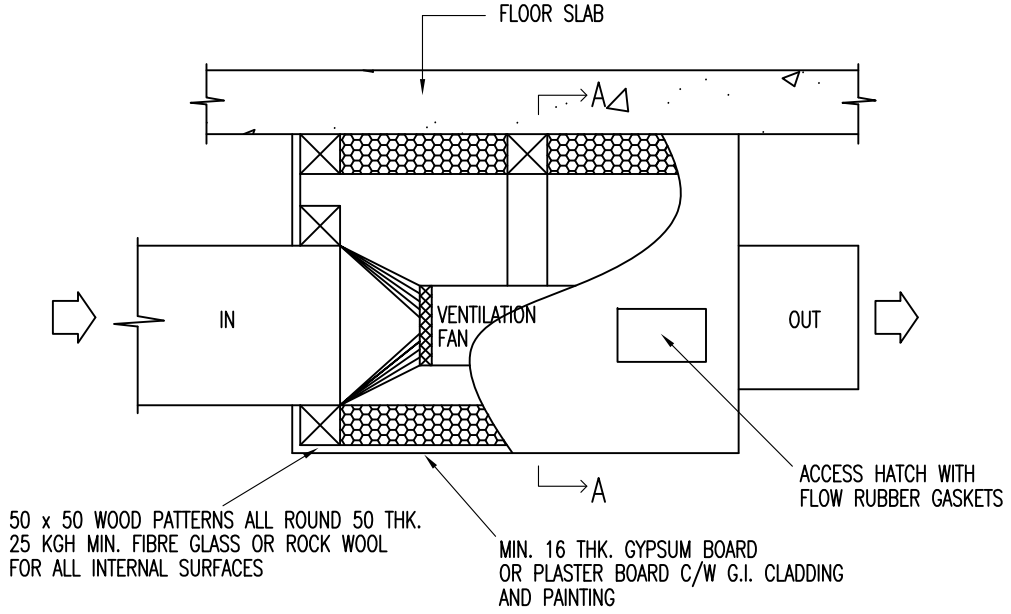

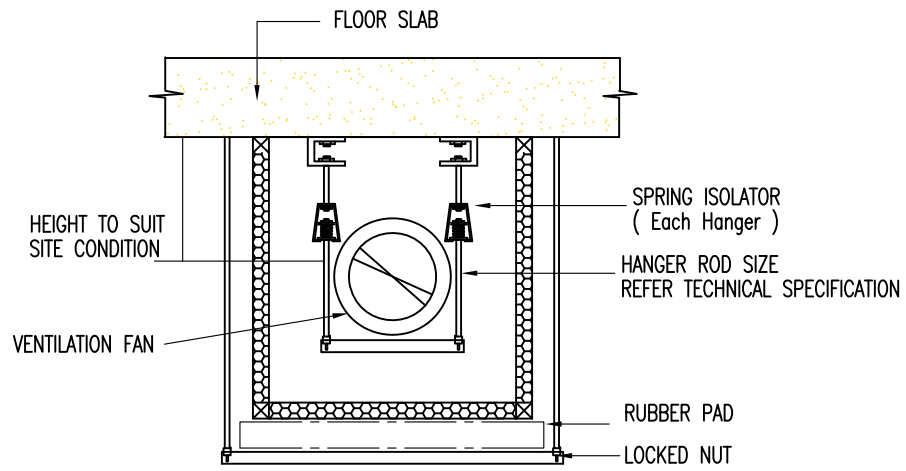

SECTION A–A

NOTE:

1. CLEARANCE MIN. 150mm ALL ROUND THE FAN
2. ALL JOINTS AND JUNCTIONS TO BE CAULKED AIR TIGHT

TYPICAL INSTALLATION VENTILATION FAN – NOISE CONTROL DETAIL INSTALLATION

JKR MEKANIKAL

JASA KEPADA RAKYAT

CAWANGAN KEJURUTERAAN MEKANIKAL
Ibu Pejabat JKR Malaysia

FIRE FIGHTING SYSTEM

TYPICAL TYPE OF FAN INSTALLATION

DATE	SCALE
2017	NTS

DRAWING NUMBER

CKM/STD/FF/SMOKE SPILL/REV2017/03

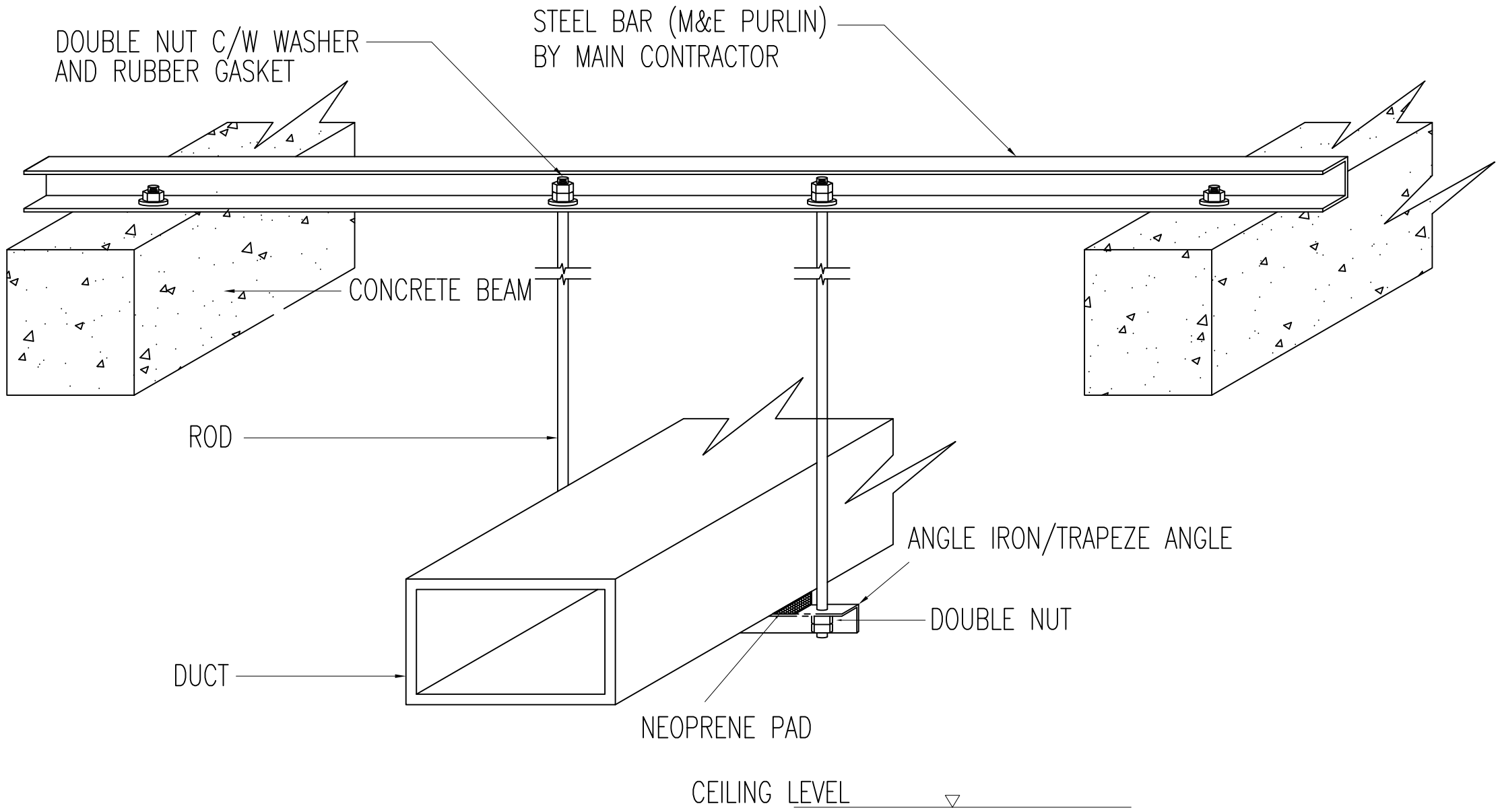

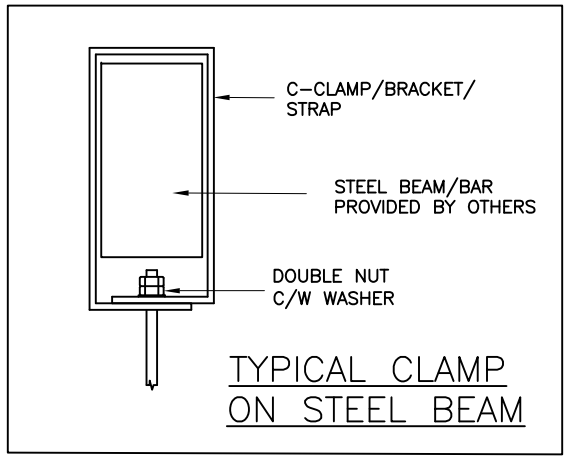

TYPICAL DUCT SUPPORT AND HANGER (UNDER THE ROOF)

TYPICAL DUCT/ DIFFUSER SUPPORT
AND HANGER (UNDER THE ROOF)

JKR
MEKANIKAL

JASA KEPADA RAKYAT

CAWANGAN KEJURUTERAAN MEKANIKAL
Ibu Pejabat JKR Malaysia

FIRE FIGHTING SYSTEM

TYPICAL TYPE OF DUCT INSTALLATION

DATE	SCALE
2017	NTS

DRAWING NUMBER
CKM/STD/FF/SMOKE SPILL/REV2017/04

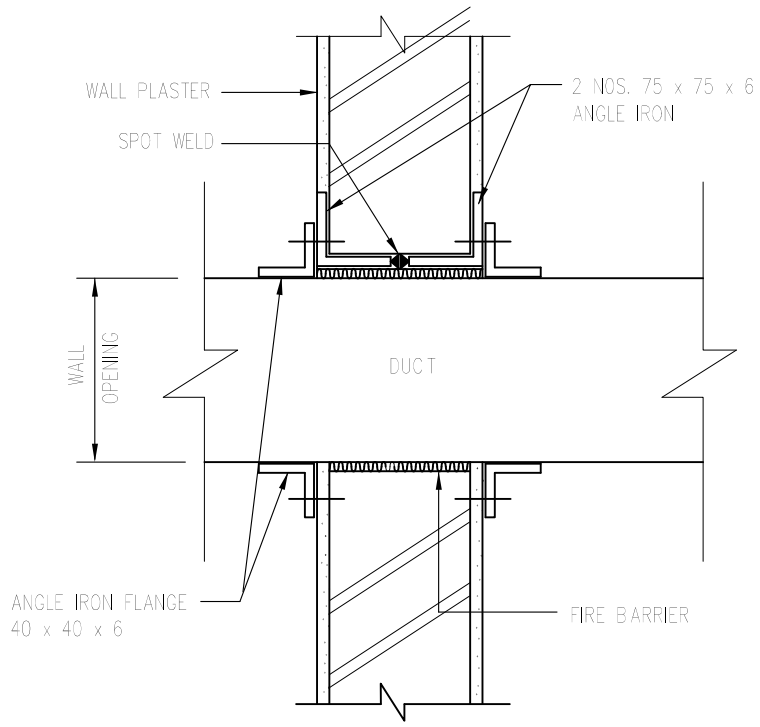

SECTION A

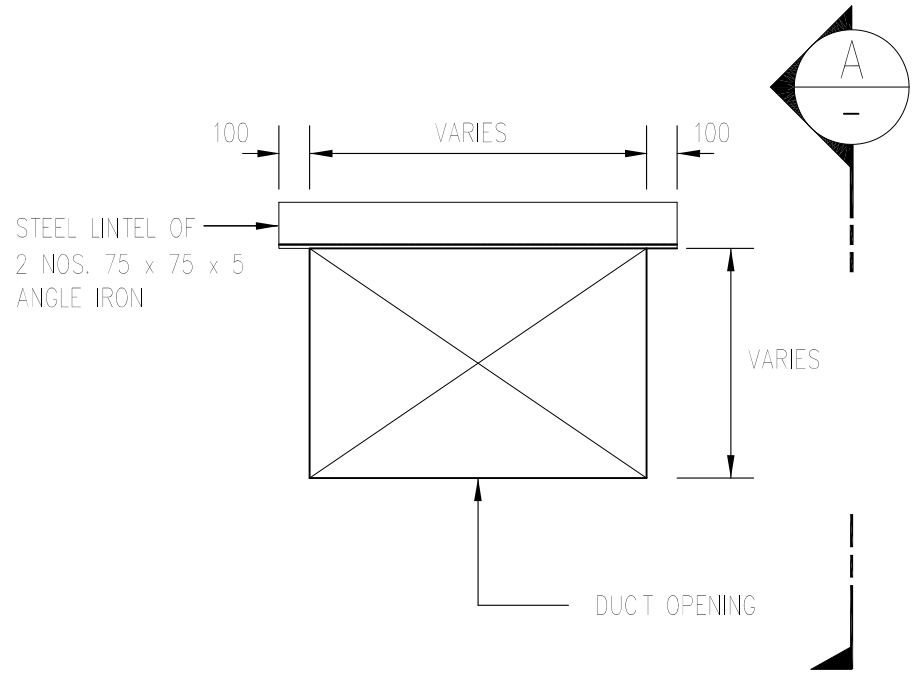

ELEVATION

STANDARD DETAIL OF DUCT FIRE BARRIER THOUGH FLOOR SLAB & FIRE COMPARTMENT WALL

NOTES: DUCT HANGERS SHALL BE FIXED TO THE CONCRETE/SLAB WITH SUITABLE SIZE OF ANCHOR BOLT RECOMMENDED BY THE MANUFACTURER

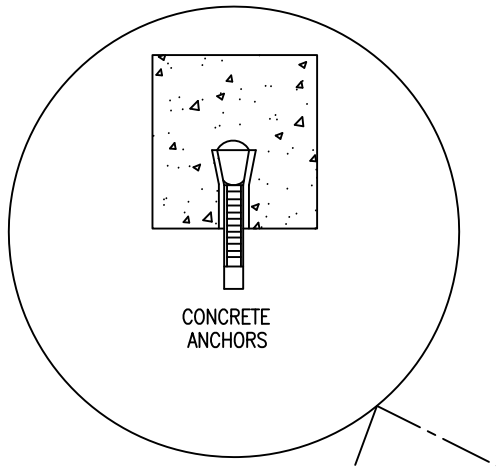

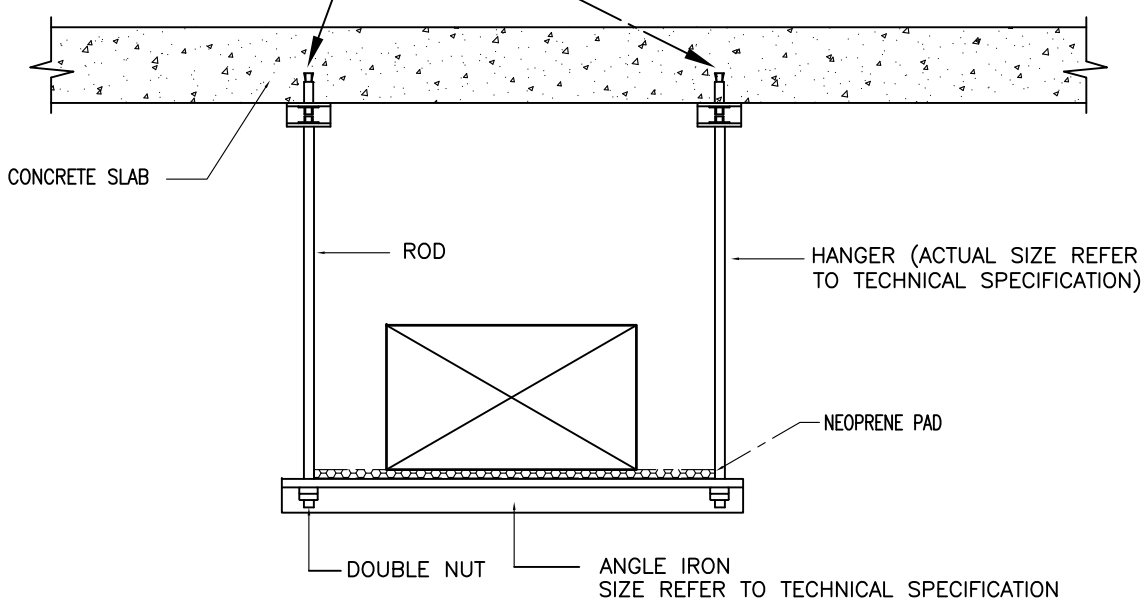

TYPICAL DUCT SUPPORT AND HANGER (TRAPEZE ANGLE)

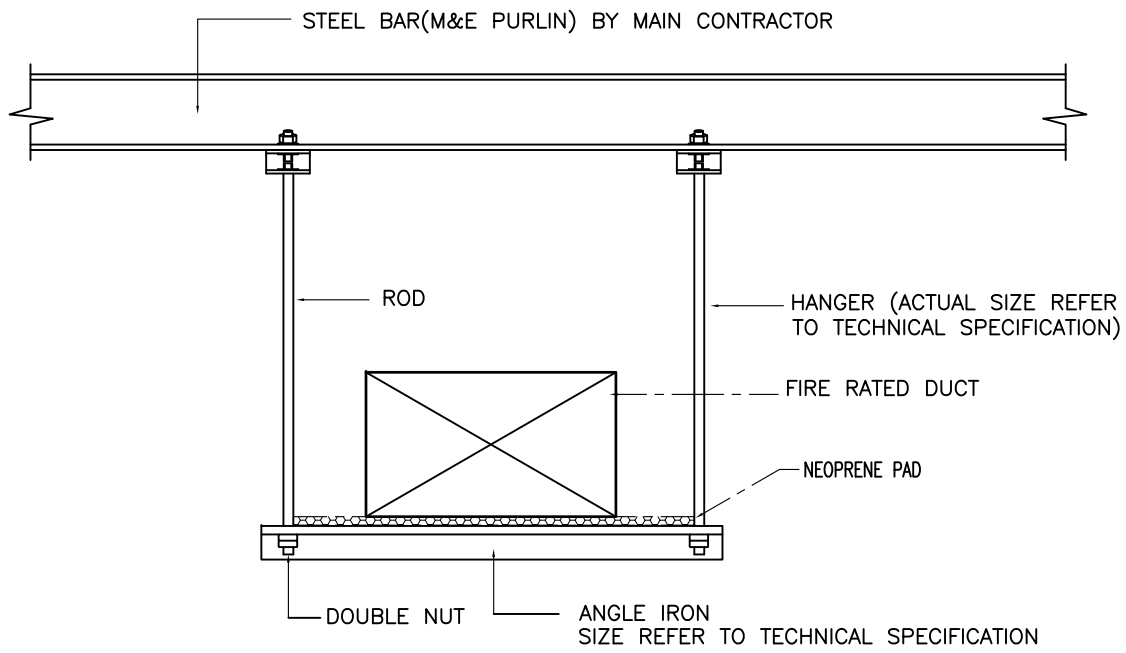

TYPICAL DUCT SUPPORT AND HANGER

JKR MEKANIKAL

JASA KEPADA RAKYAT

CAWANGAN KEJURUTERAAN MEKANIKAL
Ibu Pejabat JKR Malaysia

FIRE FIGHTING SYSTEM

TYPICAL TYPE OF DUCT INSTALLATION

DATE	SCALE
2017	NTS

DRAWING NUMBER
CKM/STD/FF/SMOKE SPILL/REV2017/05

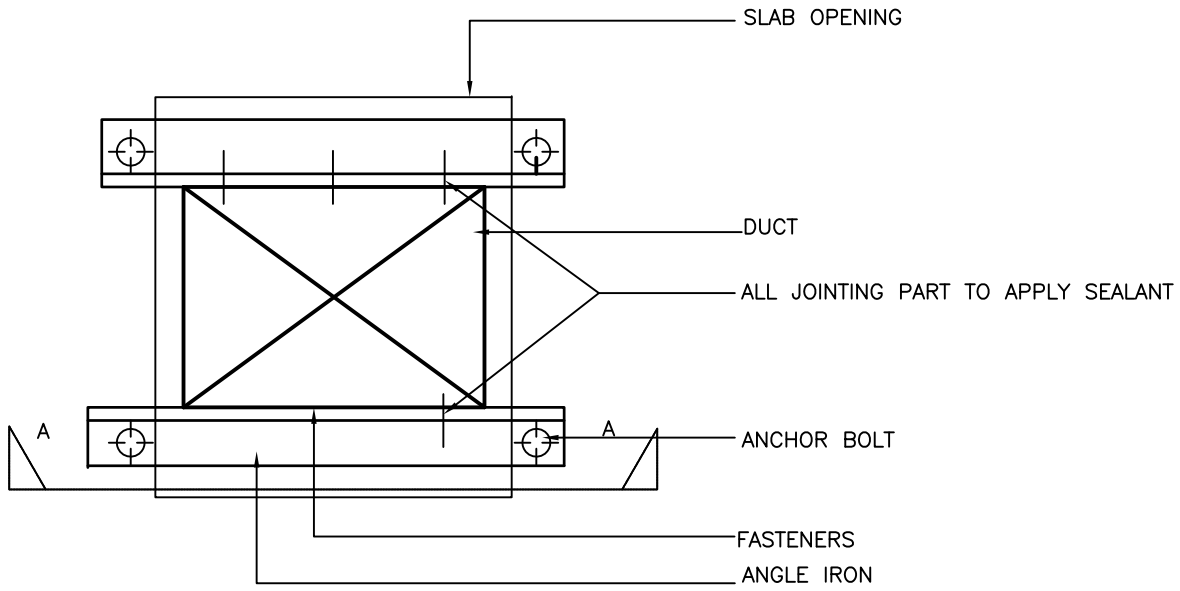

PLAN

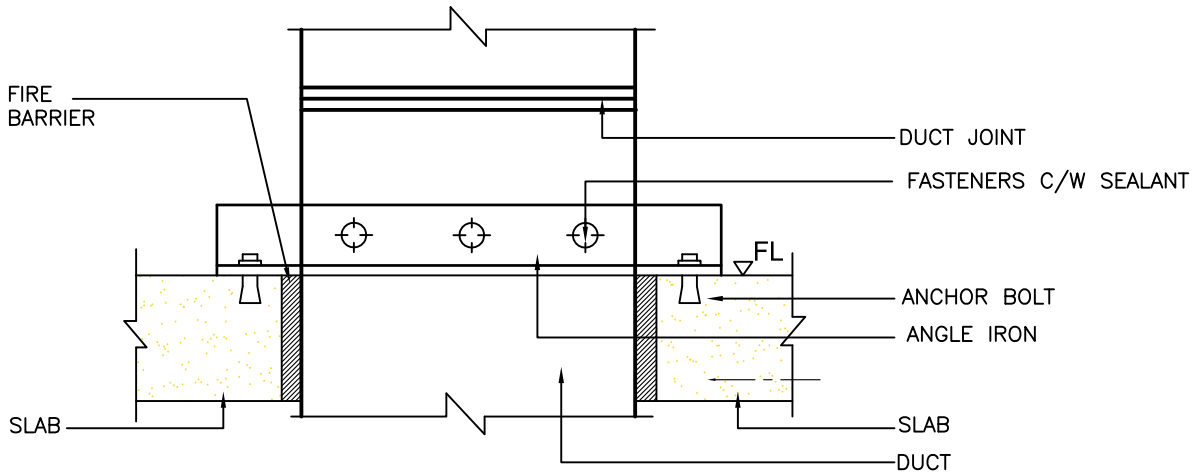

SECTION A–A

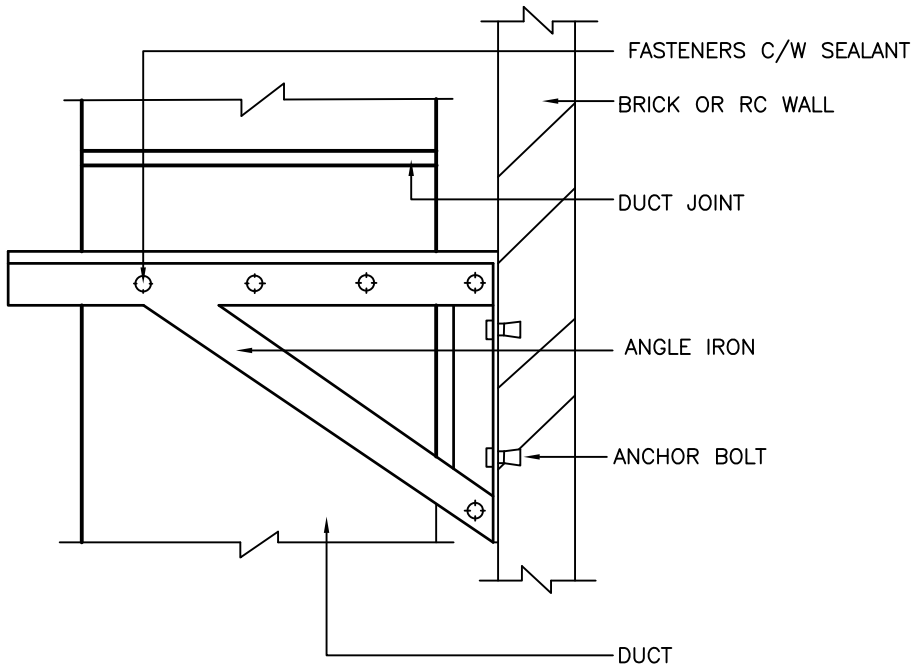

DUCT SUPPORT FOR DUCT RISER
ANCHORING INTO R.C WALL OR BRICKWALL

JKR MEKANIKAL

JASA KEPADA RAKYAT

CAWANGAN KEJURUTERAAN MEKANIKAL
Ibu Pejabat JKR Malaysia

FIRE FIGHTING SYSTEM

TYPICAL TYPE OF DUCT INSTALLATION

DATE	SCALE
2017	NTS

DRAWING NUMBER
CKM/STD/FF/SMOKE SPILL/REV2017/06

STANDARD MECHANICAL DESIGN DETAIL DRAWING FOR MECHANICAL SYSTEMS IN BUILDINGS

SECTION III : LIFT AND ESCALATOR SYSTEM

CAWANGAN KEJURUTERAAN MEKANIKAL
IBU PEJABAT JKR MALAYSIA
KUALA LUMPUR

JKR
MEKANIKAL

JASA KEPADA RAKYAT

2017

LIST OF DRAWINGS

NO.	DRAWING TITLE	DRAWING NUMBER
A	LIFT SYSTEM	
1	LIFT HOISTWAY INSTALLATION DETAIL	CKM/STD/LF/REV2017/01
2	MACHINE ROOM DETAIL	CKM/STD/LF/REV2017/02
3	LIFT CAR INTERNAL INSTALLATION DETAIL	CKM/STD/LF/REV2017/03
4	LIFT LOBBY INSTALLATION DETAIL	CKM/STD/LF/REV2017/04
5	LIFT PIT DETAIL AND LIFT PIT WITH SUMP DETAIL	CKM/STD/LF/REV2017/05
6	ANTI VANDALISME FEATURES	CKM/STD/LF/REV2017/06
7	DETAIL OF HANDICAP FEATURES	CKM/STD/LF/REV2017/07
8	DETAIL OF ARCHITRAVE	CKM/STD/LF/REV2017/08
9	DETAIL OF THROUGH DOOR LIFT	CKM/STD/LF/REV2017/09
10	DETAIL OF STRETCHER	CKM/STD/LF/REV2017/10
11	TYPE OF HANDRAIL	CKM/STD/LF/REV2017/11
12	DETAIL OF MOTOR ROOM LESS LIFT	CKM/STD/LF/REV2017/12
B	ESCALATOR SYSTEM	
1	ESCALATOR DETAIL	CKM/STD/ESC/REV2017/01
C	DUMB WAITER SYSTEM	
1	TYPICAL DUMB WAITER EQUIPMENT	CKM/STD/DW/REV2017/01
2	TYPICAL DUMB WAITER INSTALLATION (FRONT BACK)	CKM/STD/DW/REV2017/02
3	TYPICAL DUMB WAITER INSTALLATION (SAME SIDE)	CKM/STD/DW/REV2017/03

NOTE:

1. This is a tender drawing and should not be taken as working drawing.
2. The standard details shown shall serve as guidelines only, contractor shall install and modify if necessary to suit the site condition and subject to S.O approval.

JKR MEKANIKAL

JASA KEPADA RAKYAT

CAWANGAN KEJURUTERAAN MEKANIKAL
Ibu Pejabat JKR Malaysia

LIFT AND ESCALATOR SYSTEM

DRAWING NUMBER

DATE	SCALE
2017	NTS

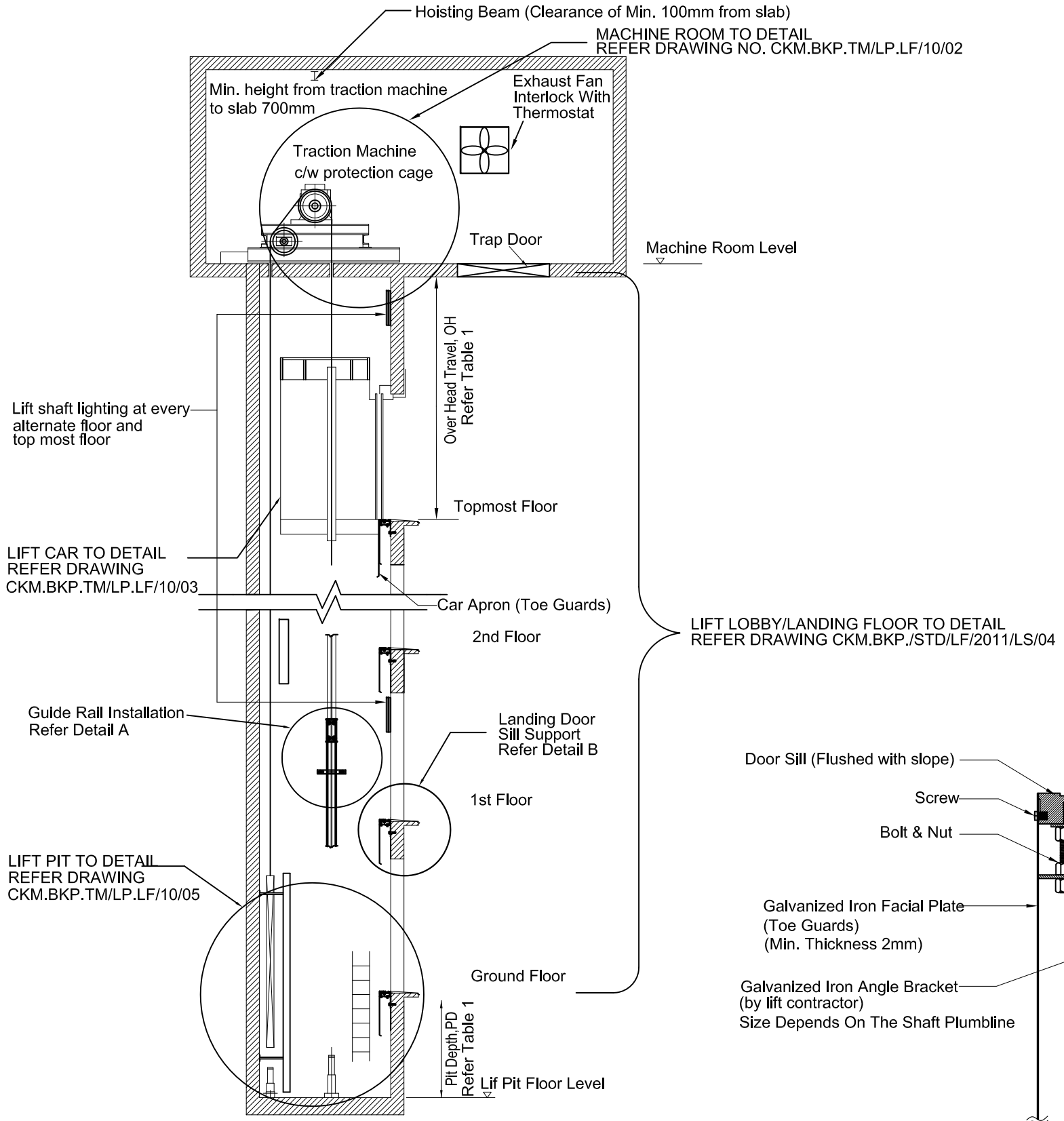

CROSS SECTION VIEW

NOTES:

1. The material and size of guiderail shall be refered to technical specification.

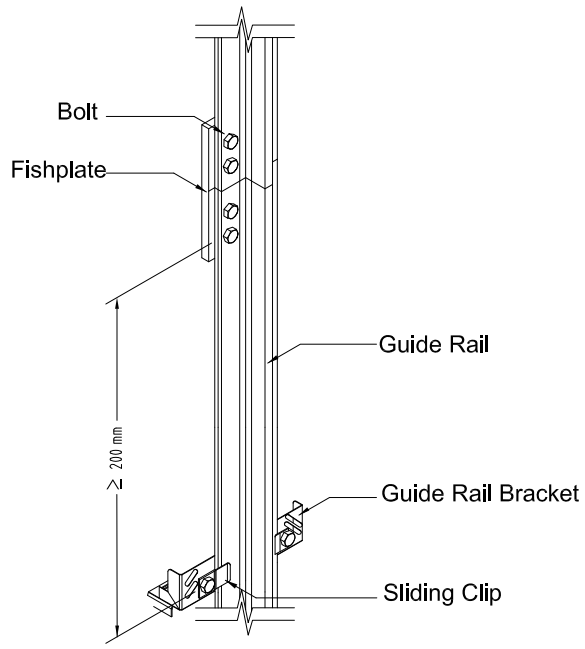

DETAIL A
MINIMUM DISTANCE BETWEEN THE FISHPLATE AND THE GUIDE RAIL BRACKET

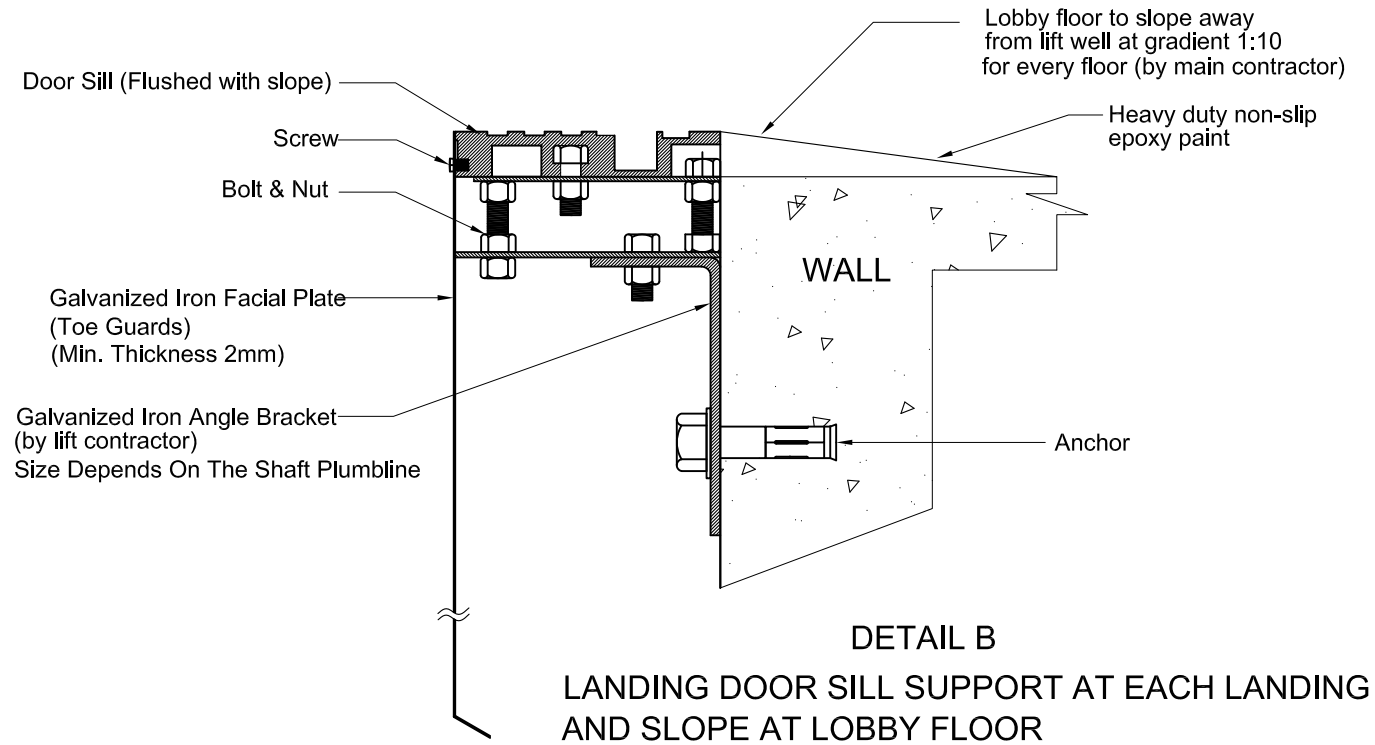

DETAIL B
LANDING DOOR SILL SUPPORT AT EACH LANDING AND SLOPE AT LOBBY FLOOR

NOTE:

1. This is a tender drawing and should not be taken as working drawing.
2. The standard details shown shall serve as guidelines only, contractor shall install and modify if necessary to suit the site condition and subject to S.O approval.

JKR MEKANIKAL

JASA KEPADA RAKYAT

CAWANGAN KEJURUTERAAN MEKANIKAL
Ibu Pejabat JKR Malaysia

LUKISAN PERINCIAN PIAWAI PEMASANGAN SISTEM LIFT

LIFT HOISTWAY INSTALLATION DETAIL

DATE	SCALE
2017	NTS

DRAWING NUMBER
CKM/STD/LF/REV2017/01

LIFT HOISTWAY INSTALLATION DETAIL

N.T.S

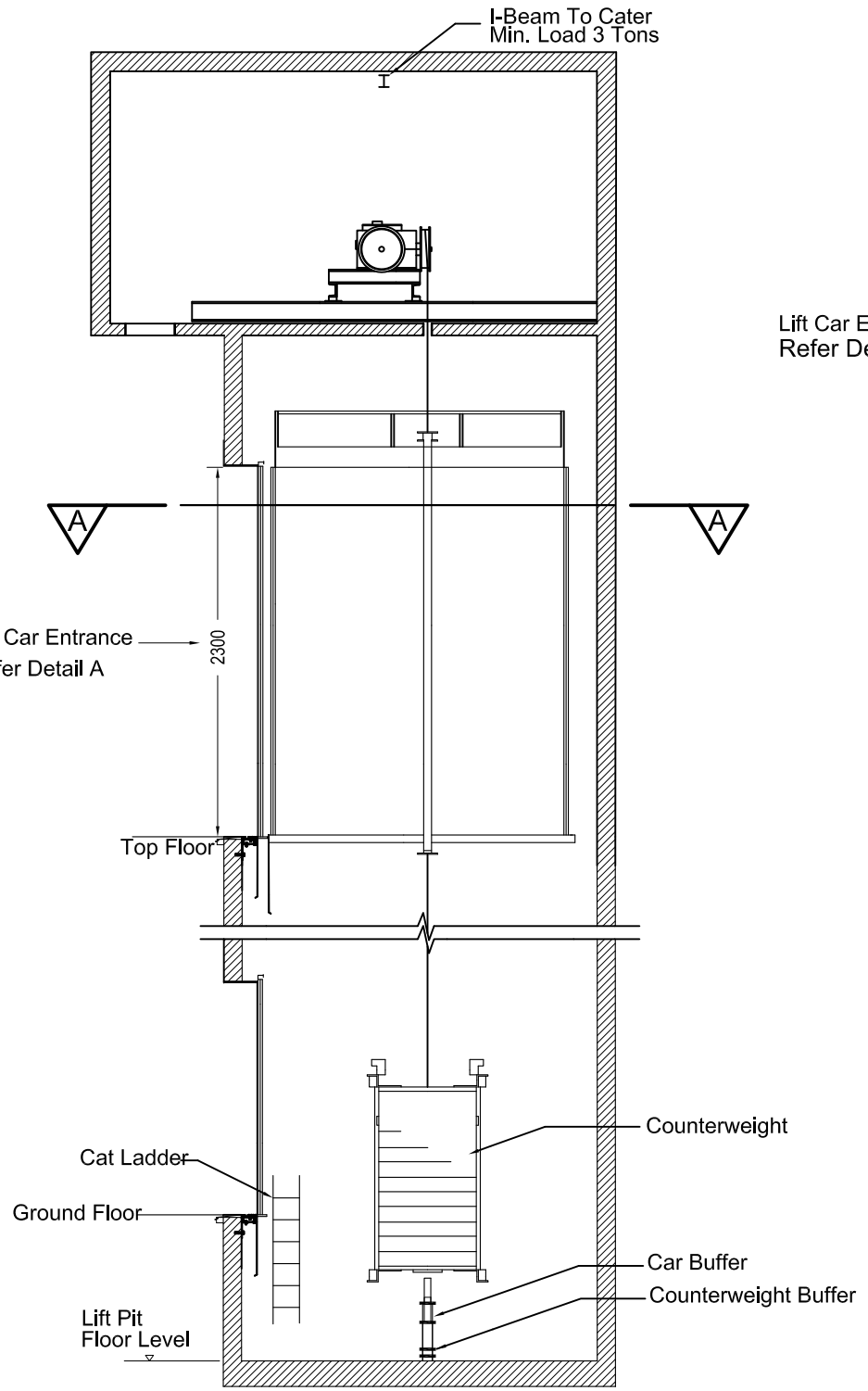

CROSS SECTION VIEW

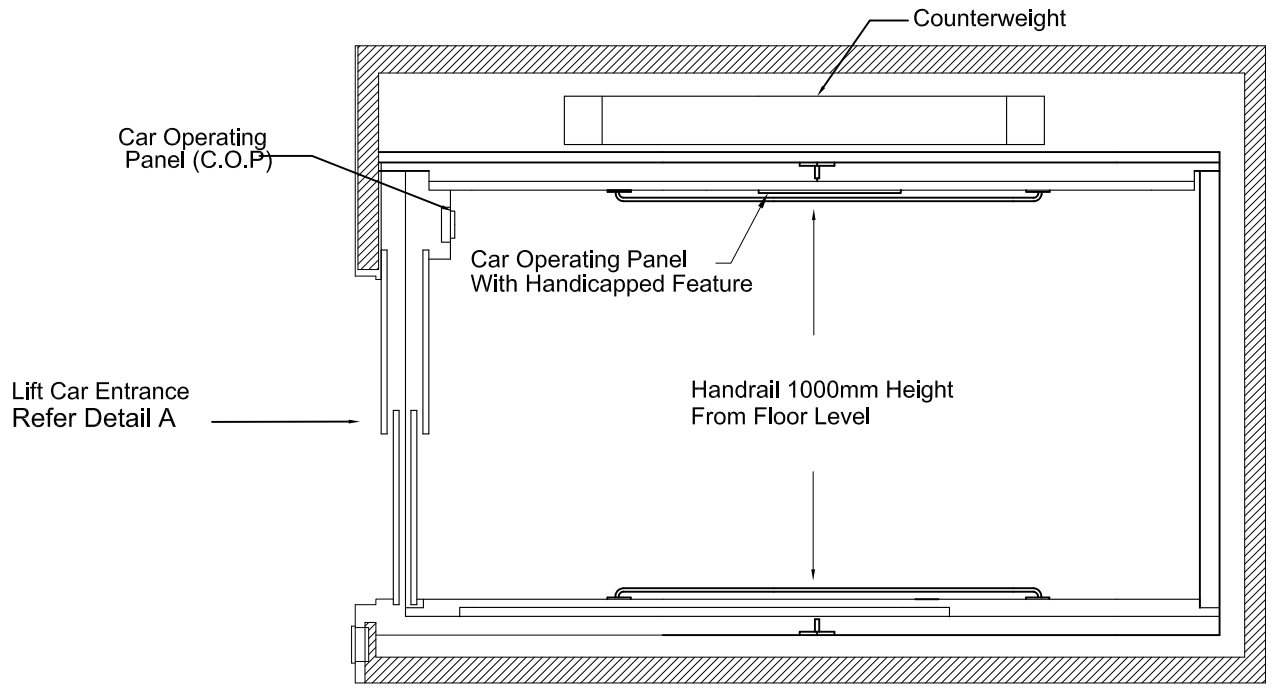

SECTION A-A

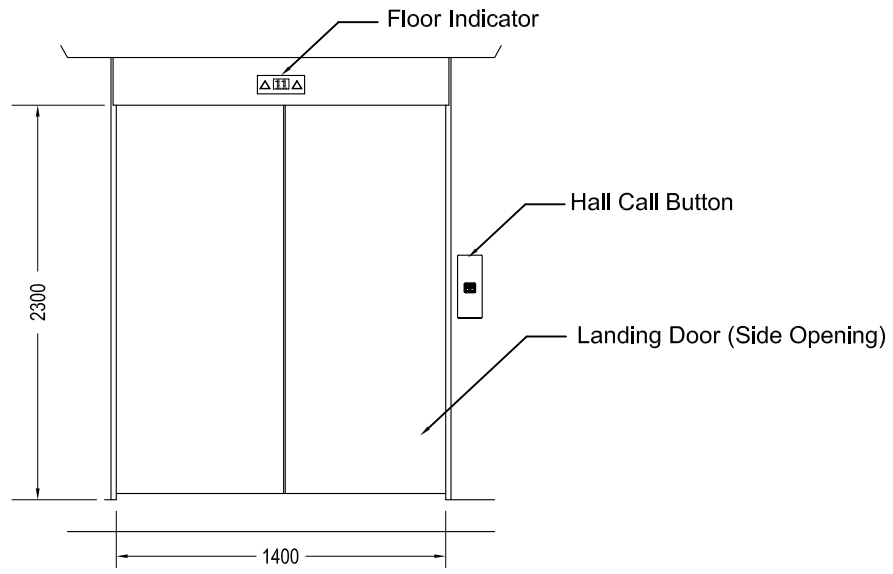

DETAIL A

DETAIL OF STRETCHER LIFT

N.T.S

JKR MEKANIKAL

JASA KEPADA RAKYAT

CAWANGAN KEJURUTERAAN MEKANIKAL
Ibu Pejabat JKR Malaysia

LUKISAN PERINCIAN PIAWAI PEMASANGAN SISTEM LIFT

DETAIL OF STRETCHER LIFT

DATE	SCALE
2017	NTS

DRAWING NUMBER
CKM/STD/LF/REV2017/10

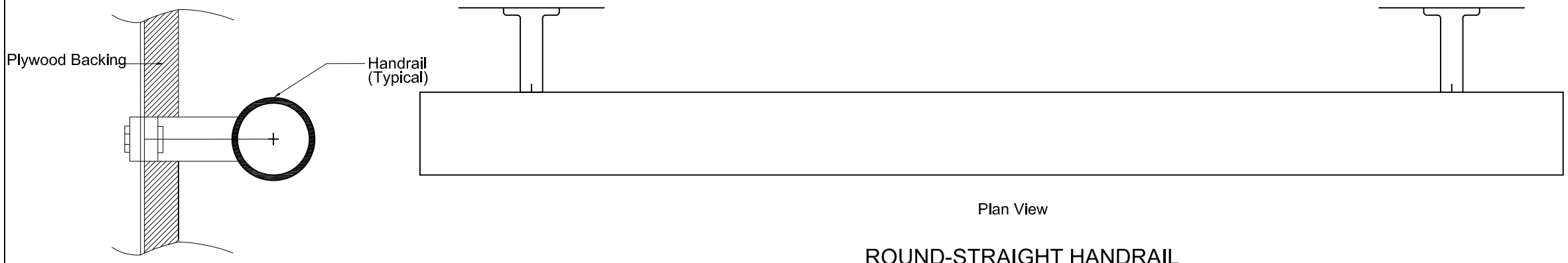

Side View

Plan View

ROUND-STRAIGHT HANDRAIL

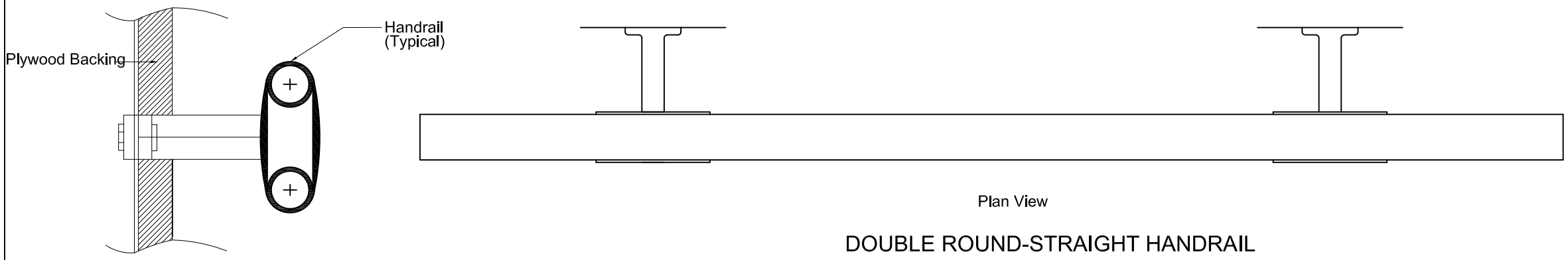

Side View

Plan View

DOUBLE ROUND-STRAIGHT HANDRAIL

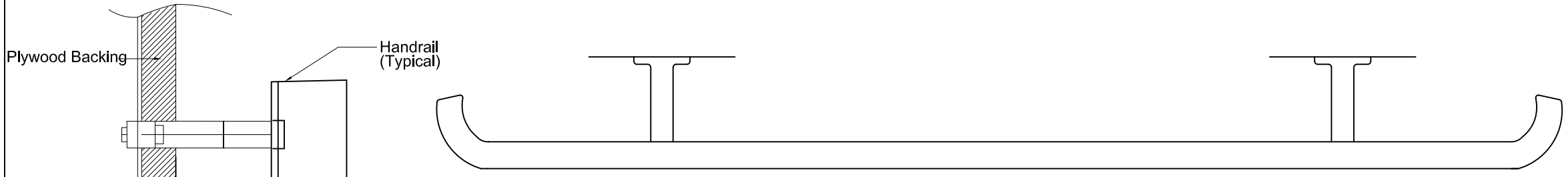

Side View

Plan View

FLAT-CURVE HANDRAIL TYPE 1

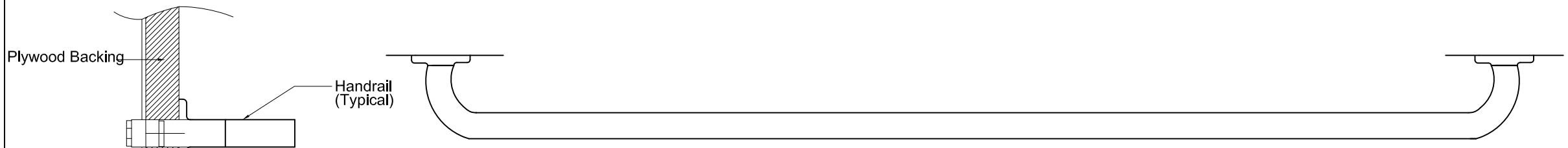

Side View

Plan View

FLAT-CURVE HANDRAIL TYPE 2

TYPE OF HANDRAIL

N.T.S

NOTE:

1. This is a tender drawing and should not be taken as working drawing.
2. The standard details shown shall serve as guidelines only, contractor shall install and modify if necessary to suit the site condition and subject to S.O approval.

JKR MEKANIKAL

JASA KEPADA RAKYAT

CAWANGAN KEJURUTERAAN MEKANIKAL
Ibu Pejabat JKR Malaysia

LUKISAN PERINCIAN PIAWAI PEMASANGAN SISTEM LIFT

TYPE OF HANDRAIL

DATE	SCALE
2017	NTS

DRAWING NUMBER

CKM/STD/LF/REV2017/11

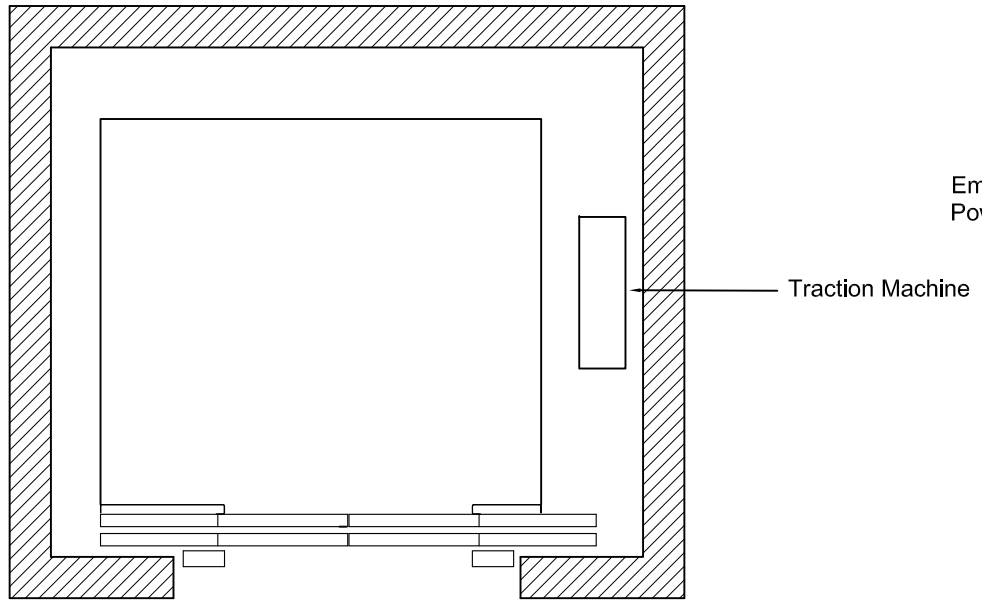

PLAN VIEW AT TOP MOST FLOOR

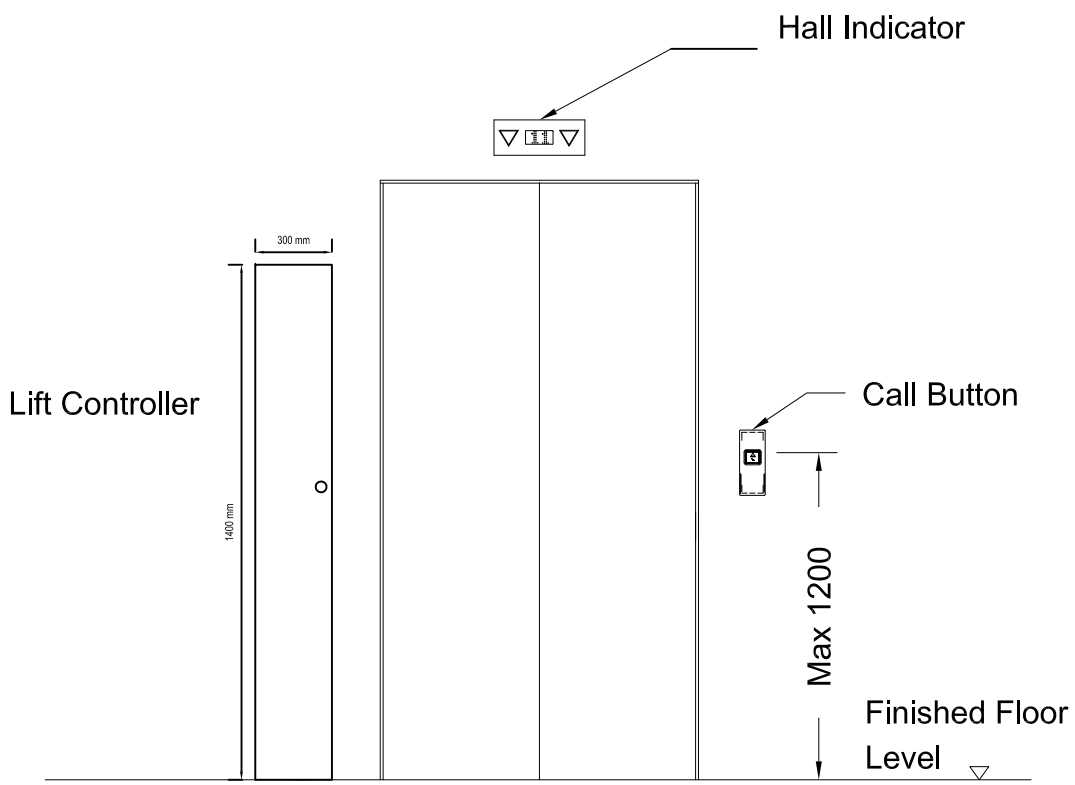

FRONT VIEW AT TOP MOST FLOOR

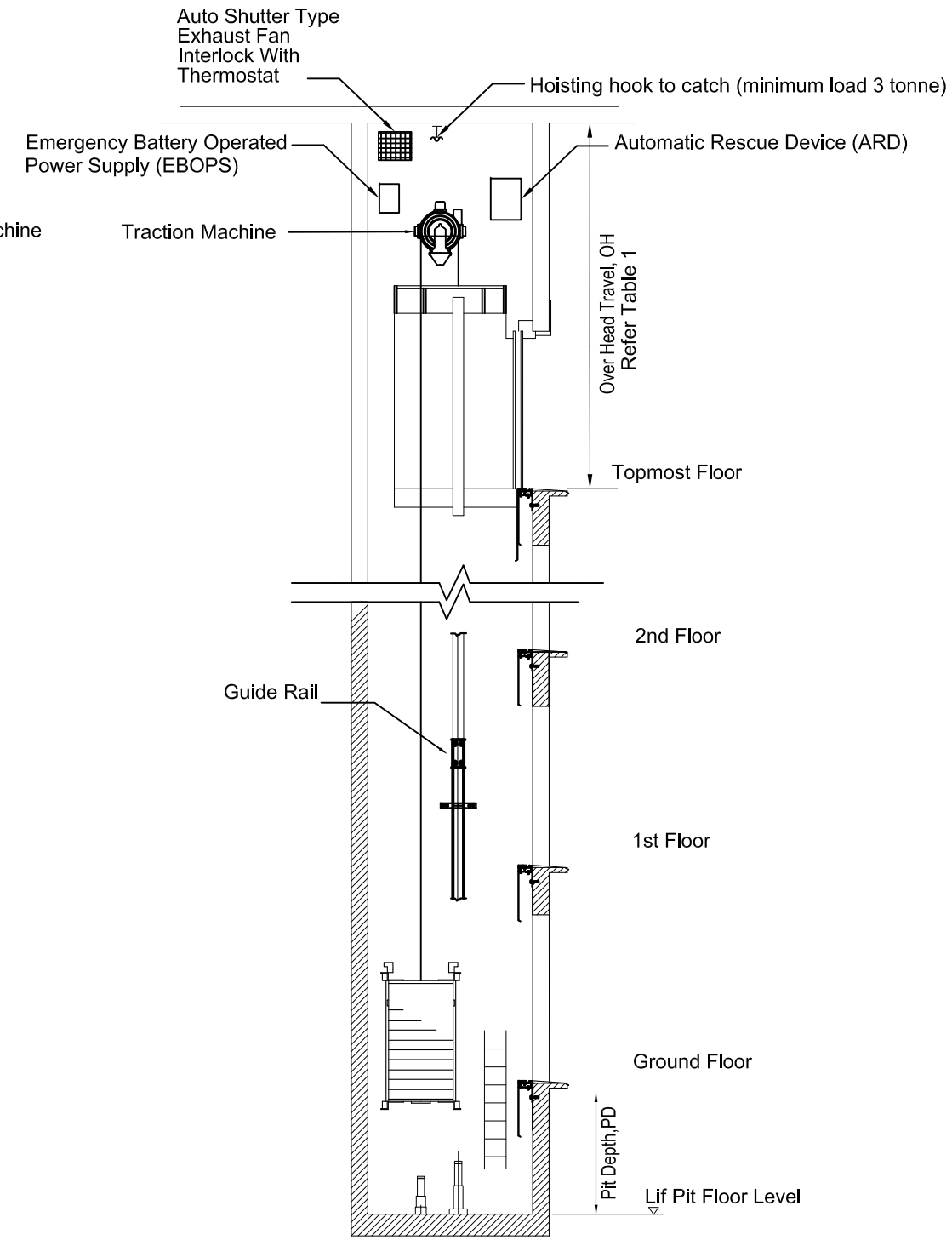

CROSS SECTION VIEW

DETAIL OF MACHINE ROOMLESS LIFT

N.T.S

NOTE:

1. This is a tender drawing and should not be taken as working drawing.
2. The standard details shown shall serve as guidelines only, contractor shall install and modify if necessary to suit the site condition and subject to S.O approval.

JKR MEKANIKAL

JASA KEPADA RAKYAT

CAWANGAN KEJURUTERAAN MEKANIKAL
Ibu Pejabat JKR Malaysia

LUKISAN PERINCIAN PIAWAI PEMASANGAN
SISTEM LIFT
DETAIL OF MACHINE ROOMLESS LIFT

DATE	SCALE
2017	NTS

DRAWING NUMBER
CKM/STD/LF/REV2017/12

NOTE:

1. All exposed moving components such as governor, sheave, etc shall be guarded.
2. Trap door to be located above lobby and leading to highest floor shall be clear of any permanent obstruction.
3. No wiring shall be run on the machine Room floor or in other position where it constitues an obstruction.

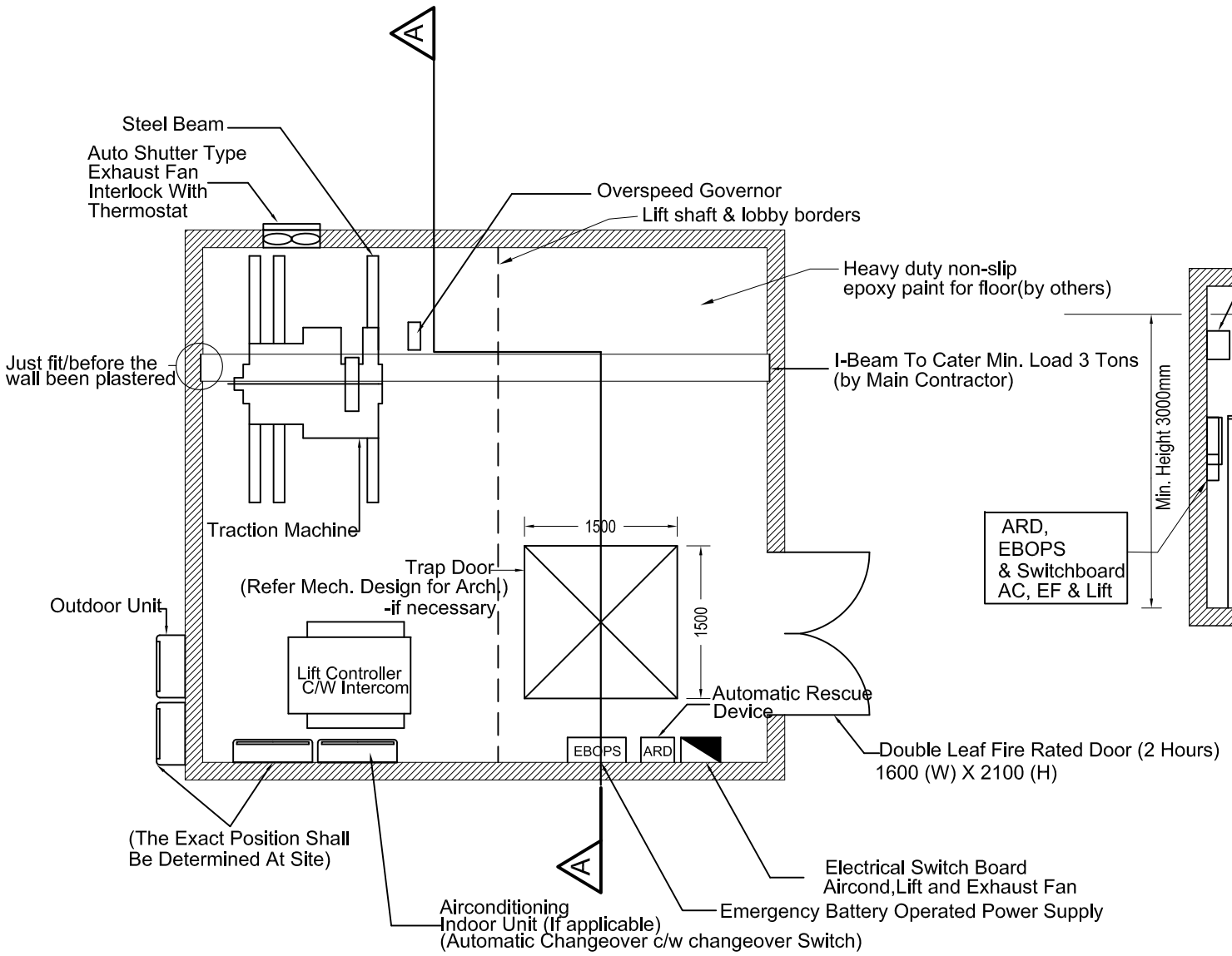

PLAN VIEW

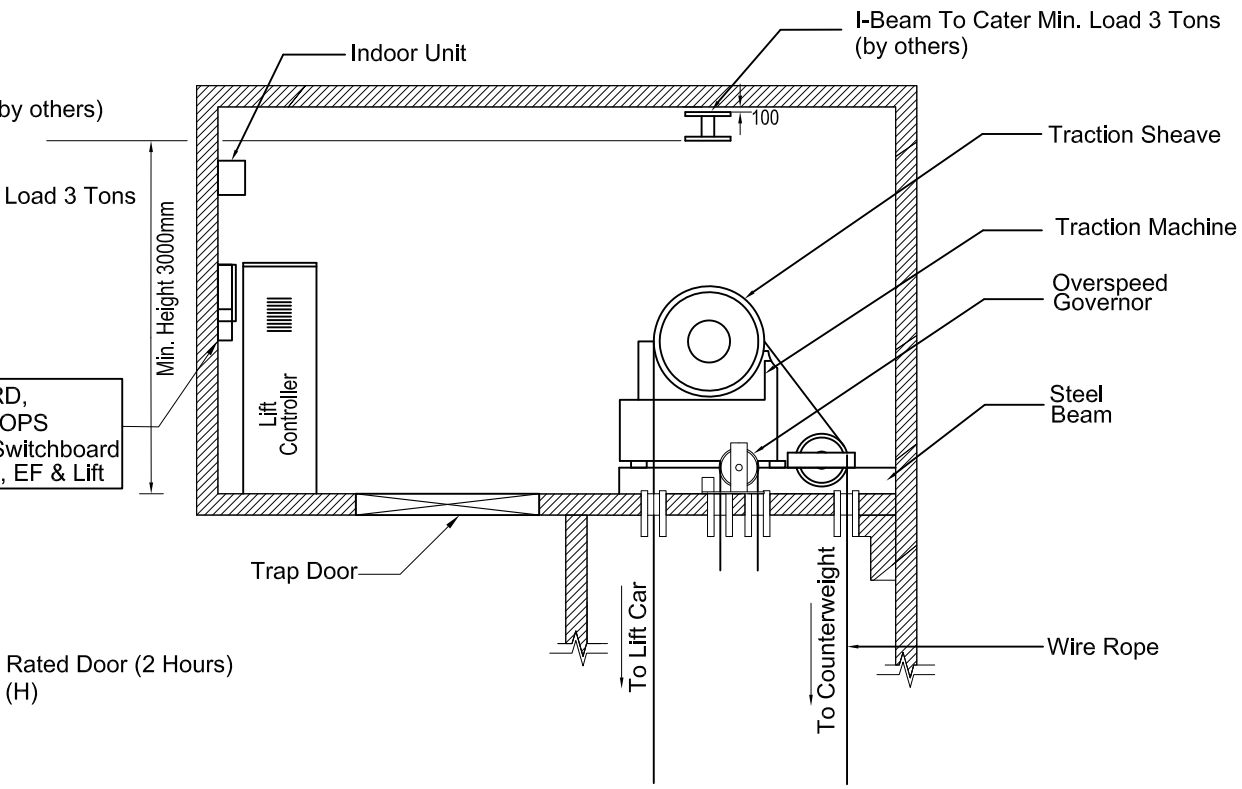

SECTION A-A

MACHINE ROOM DETAIL

N.T.S

NOTE:

1. This is a tender drawing and should not be taken as working drawing.
2. The standard details shown shall serve as guidelines only, contractor shall install and modify if necessary to suit the site condition and subject to S.O approval.

JKR MEKANIKAL

JASA KEPADA RAKYAT

CAWANGAN KEJURUTERAAN MEKANIKAL
Ibu Pejabat JKR Malaysia

LUKISAN PERINCIAN PIAWAI PEMASANGAN SISTEM LIFT

MACHINE ROOM DETAIL

DATE	SCALE
2017	NTS

DRAWING NUMBER

CKM/STD/LF/REV2017/02

NOTES:

1. Exact quantity of car operating panel (C.O.P) as per Schedule of Design Requirement.
2. Type of handrail shall be as per Schedule of Design Requirement.
3. Emergency escape door on top of lift car shall be provided with minimum 350 mm x 500 mm

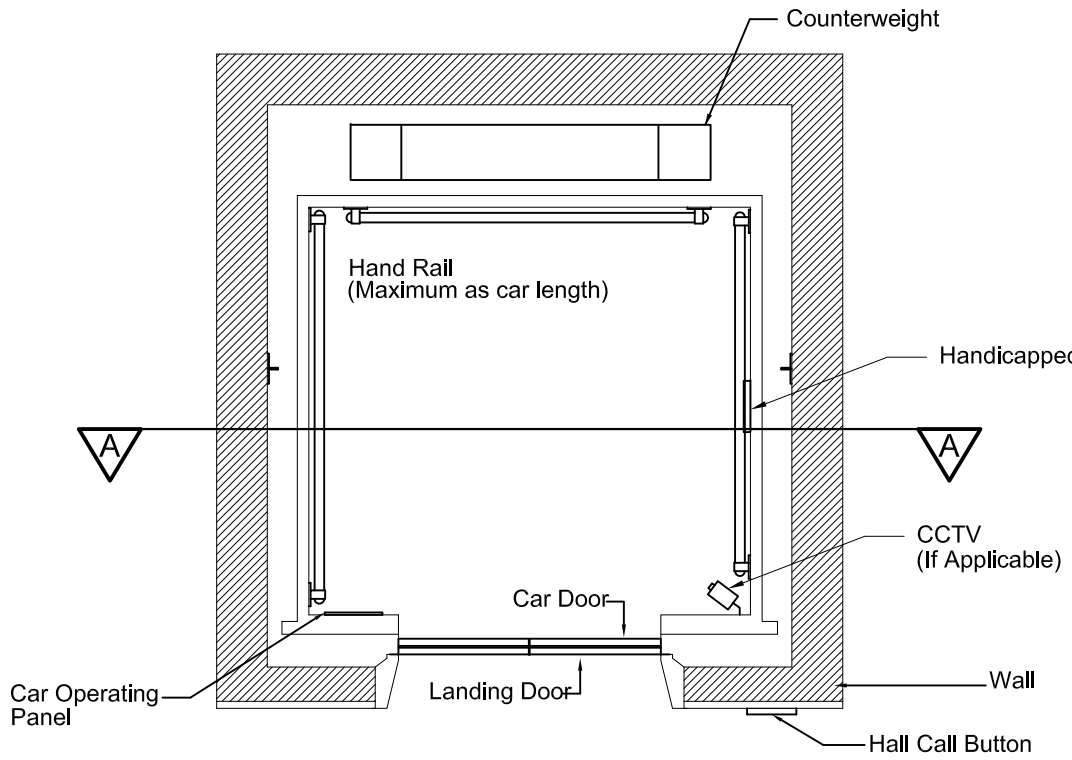

PLAN VIEW

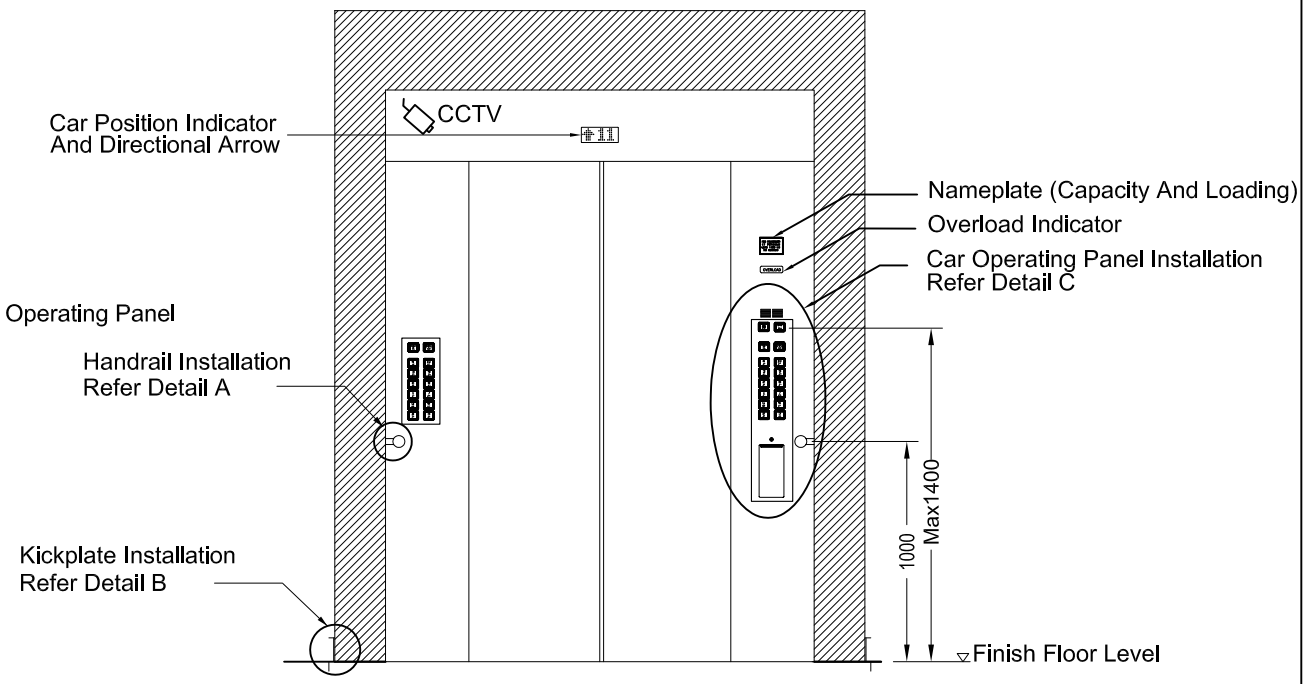

SECTION A-A

TYPICAL INTERNAL LIFT CAR FEATURES

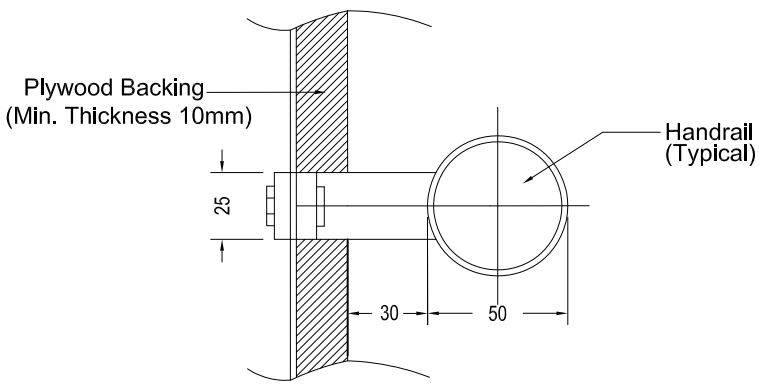

DETAIL A

TYPICAL HANDRAIL INSTALLATION

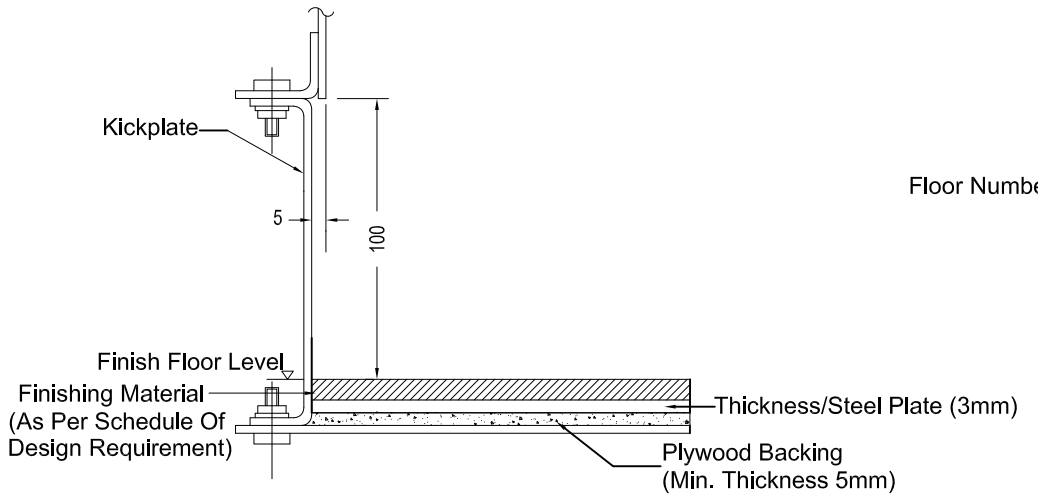

DETAIL B

KICKPLATE INSTALLATION

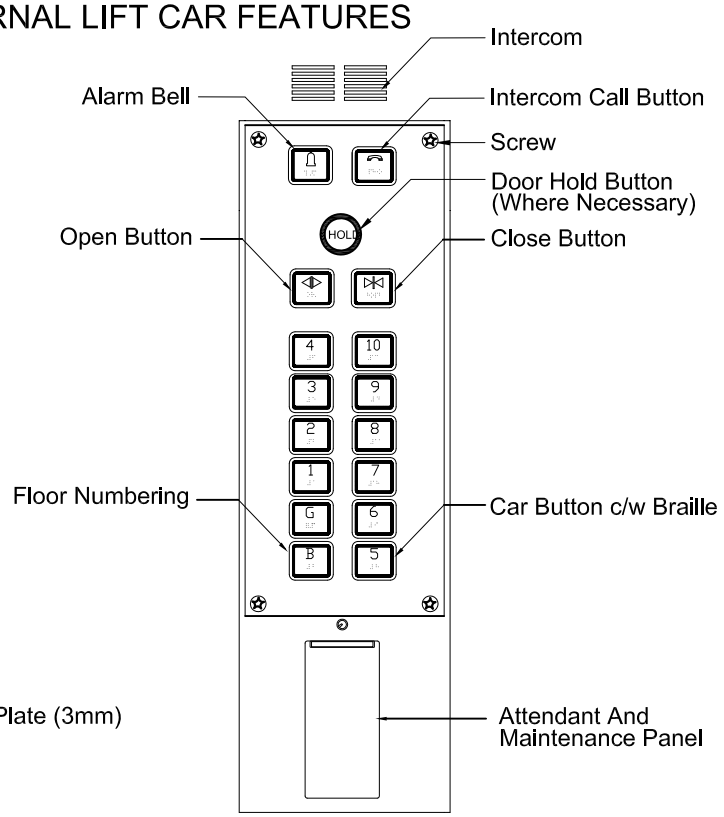

DETAIL C

TYPICAL CAR OPERATING PANEL INSTALLATION

LIFT CAR INTERNAL INSTALLATION DETAIL

N.T.S

NOTE:

1. This is a tender drawing and should not be taken as working drawing.
2. The standard details shown shall serve as guidelines only, contractor shall install and modify if necessary to suit the site condition and subject to S.O approval.

JKR MEKANIKAL

JASA KEPADA RAKYAT

CAWANGAN KEJURUTERAAN MEKANIKAL
Ibu Pejabat JKR Malaysia

LUKISAN PERINCIAN PIAWAI PEMASANGAN SISTEM LIFT

LIFT CAR INTERNAL INSTALLATION DETAIL

DATE	SCALE
2017	NTS

DRAWING NUMBER

CKM/STD/LF/REV2017/03

NOTES:

1. Floor number indicator are compulsary for main lobby only, but requirement for others floor are subject to Schedule of Design Requirement.
2. Firemen's switch shall be located at firemen's access level.
3. Minimum thickness of faceplate shall be 3mm.
4. All measurement for hall indicator and call button are in typical size.
5. All landing door shall be 2 hours fire rated for protected lobby and 1 hour fire rated for unprotected lobby.

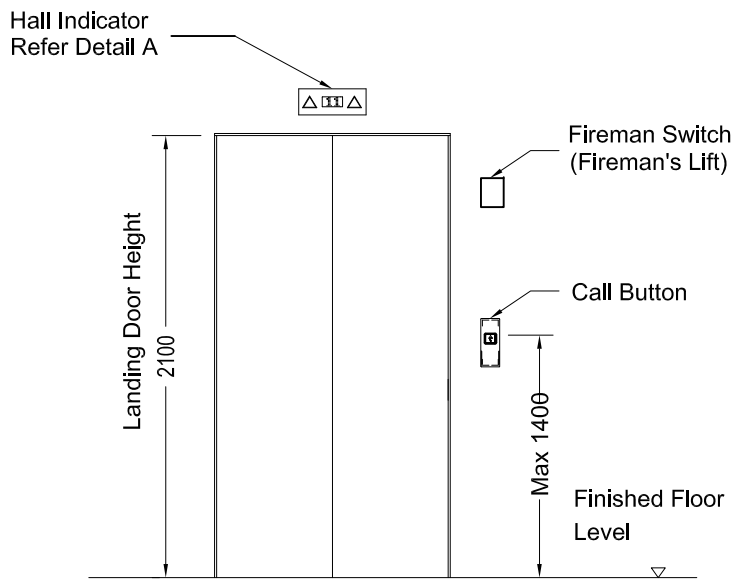

FRONT VIEW AT LOWEST FLOOR

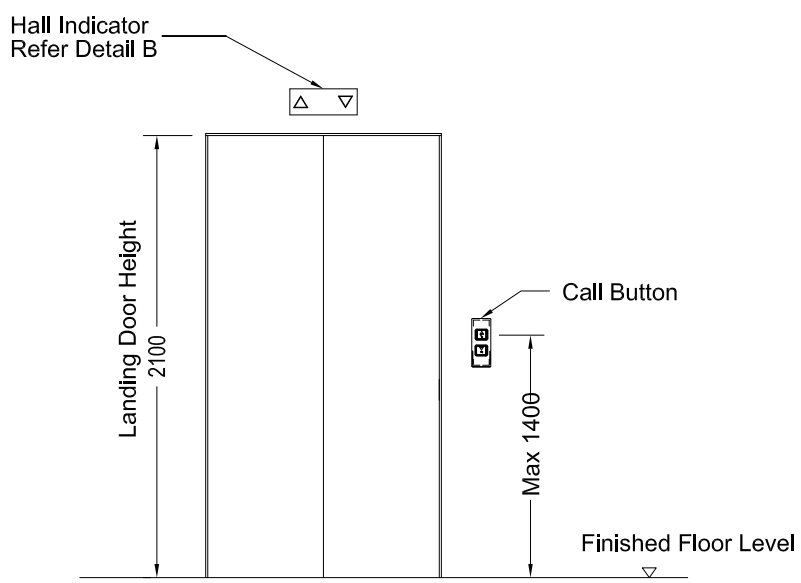

FRONT VIEW AT INTERMEDIATE FLOOR LANDINGS

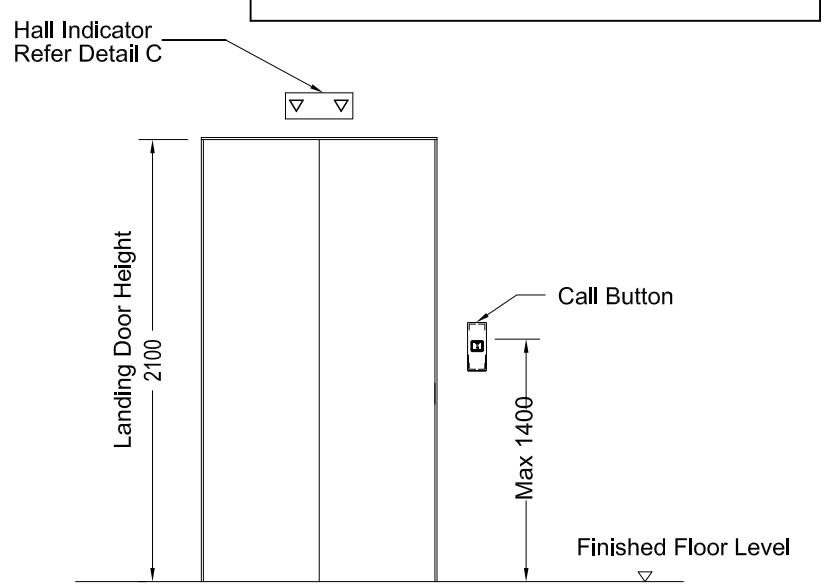

FRONT VIEW AT HIGHEST FLOOR LANDING

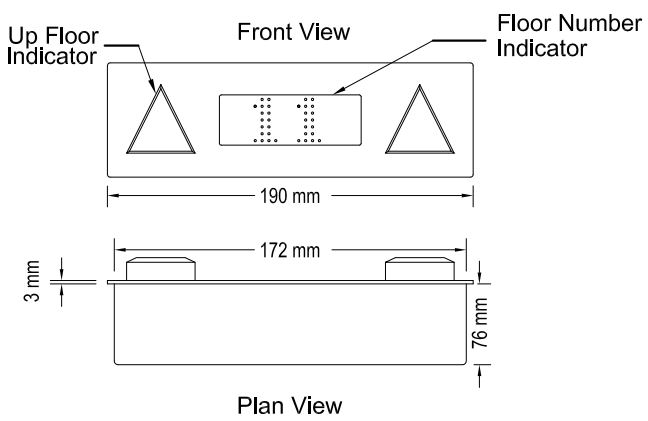

DETAIL A

HALL INDICATOR DESIGN WITH
HALL LANTERN FOR LOWEST FLOOR

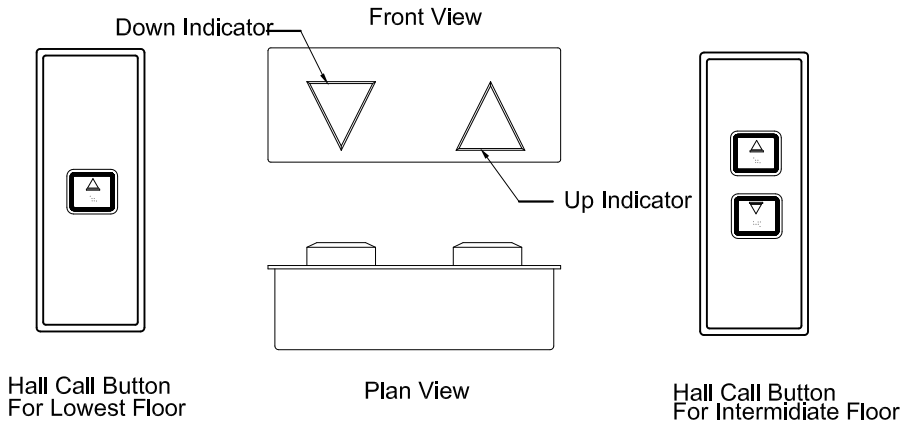

DETAIL B

HALL INDICATOR DESIGN WITH
HALL LANTERN FOR INTERMEDIATE FLOORS

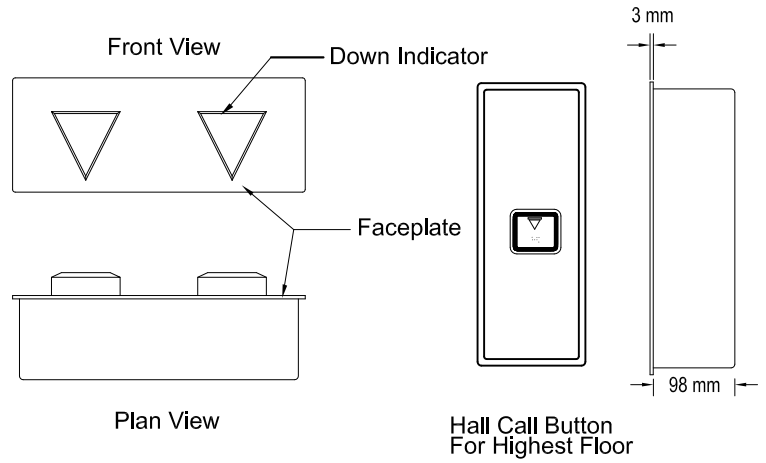

DETAIL C

HALL INDICATOR DESIGN WITH
HALL LANTERN FOR HIGHEST FLOOR

LIFT LOBBY INSTALLATION DETAIL

N.T.S

NOTE:

1. This is a tender drawing and should not be taken as working drawing.
2. The standard details shown shall serve as guidelines only, contractor shall install and modify if necessary to suit the site condition and subject to S.O approval.

KERAJAAN MALAYSIA

JASA KEPADA RAKYAT

CAWANGAN KEJURUTERAAN MEKANIKAL
Ibu Pejabat JKR Malaysia

JASA KEPADA RAKYAT

CAWANGAN KEJURUTERAAN MEKANIKAL
Ibu Pejabat JKR Malaysia

LUKISAN PERINCIAN PIAWAI PEMASANGAN
SISTEM LIFT

LIFT LOBBY INSTALLATION DETAIL

DATE	SCALE
2017	NTS

DRAWING NUMBER
CKM/STD/LF/REV2017/04

NOTES:

1. For contract speeds below and including 1 m/s, spring buffers shall be used. For speeds above 1 m/s, oil type buffer shall be used.
2. Sump to be provided in every individual lift pit at flood prone area.
3. Submersible pump shall be provided for each lift pit with sump.
4. Water proofing for lift pit shall be provided by main contractor.

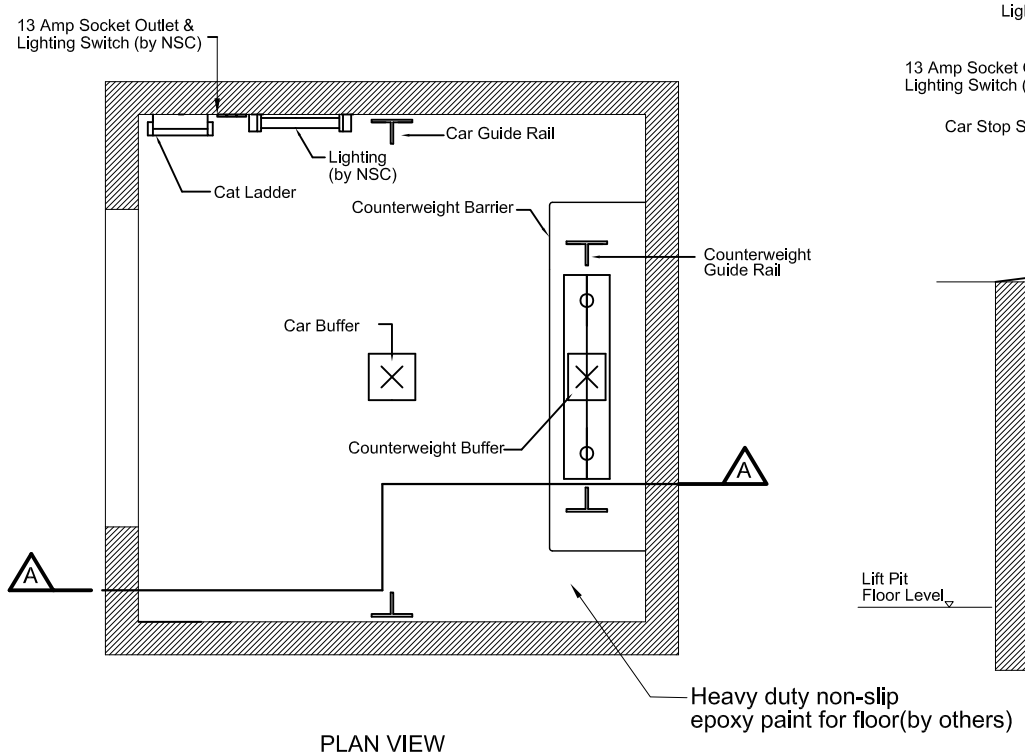

PLAN VIEW

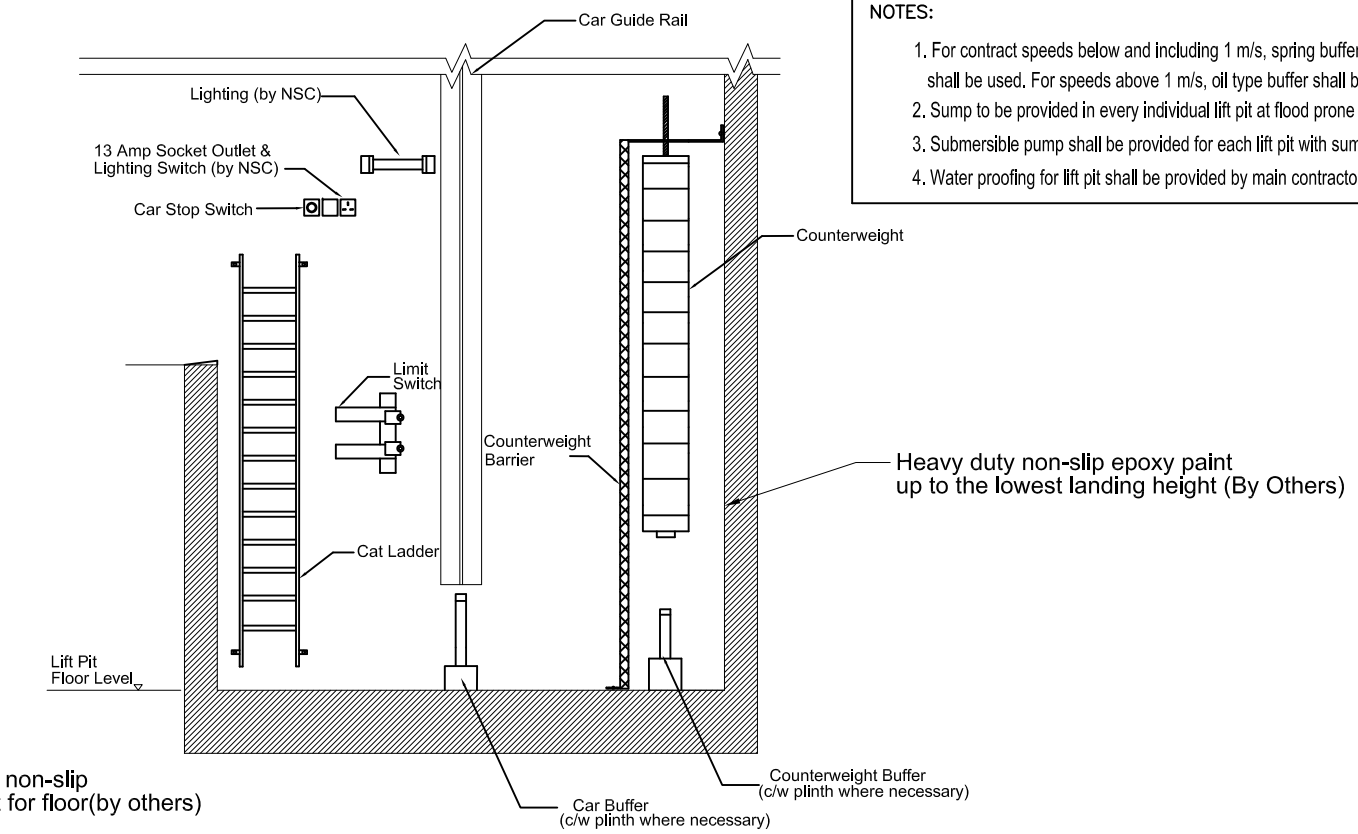

SECTION A-A

LIFT PIT DETAIL

N.T.S

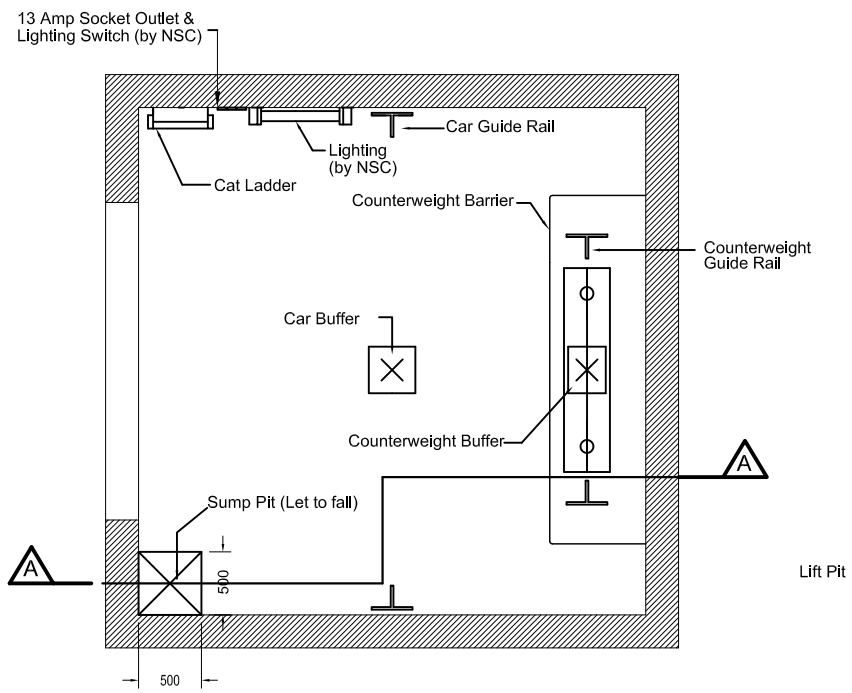

PLAN VIEW

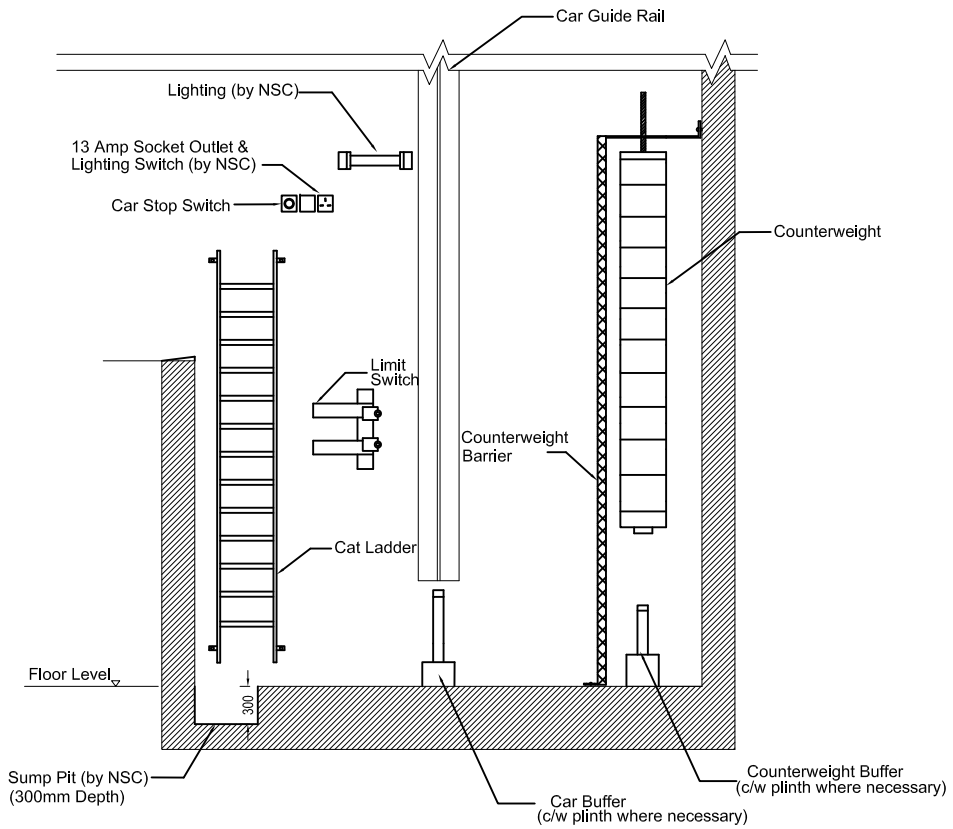

SECTION A-A

LIFT PIT WITH SUMP DETAIL

N.T.S

NOTE:

1. This is a tender drawing and should not be taken as working drawing.
2. The standard details shown shall serve as guidelines only, contractor shall install and modify if necessary to suit the site condition and subject to S.O approval.

JKR MEKANIKAL

JASA KEPADA RAKYAT

CAWANGAN KEJURUTERAAN MEKANIKAL
Ibu Pejabat JKR Malaysia

LUKISAN PERINCIAN PIAWAI PEMASANGAN SISTEM LIFT

LIFT PIT DETAIL AND LIFT PIT WITH SUMP DETAIL

DATE	SCALE
2017	NTS

DRAWING NUMBER

CKM/STD/LF/REV2017/05

NOTE:

1. Anti vandalisme perspex cover shall be mounted using special head screw.

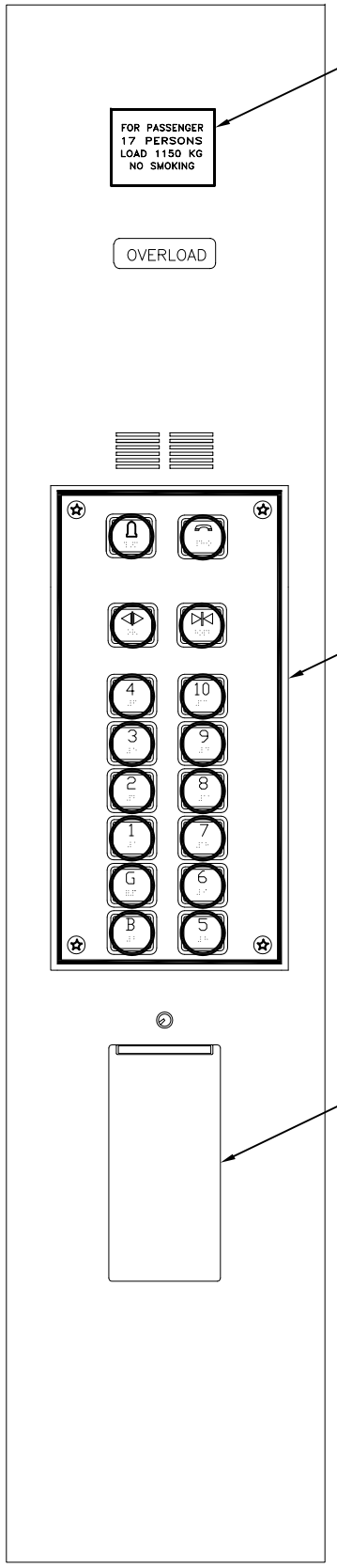

CAR OPERATING PANEL WITH PERSPEX COVER

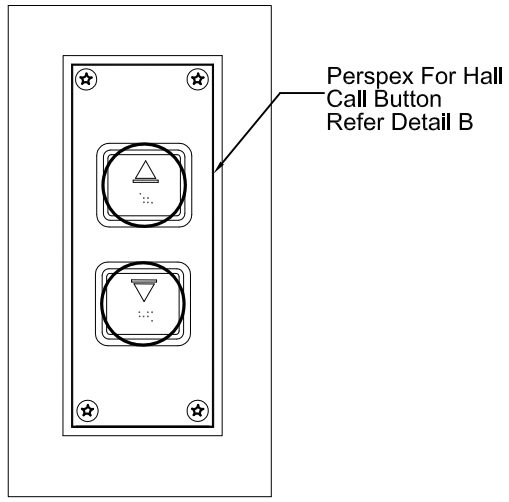

HALL CALL BUTTON WITH PERSPEX COVER

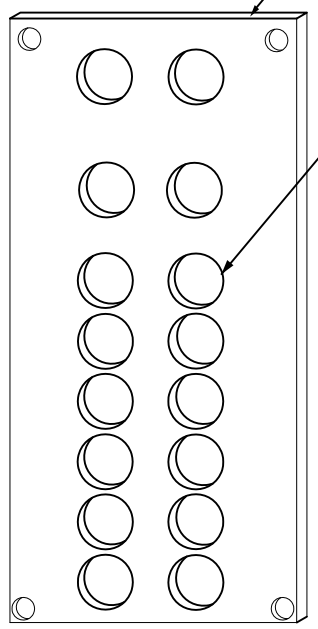

DETAIL A

PERSPEX FOR CAR OPERATING PANEL

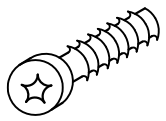

Typical Special Head Screw

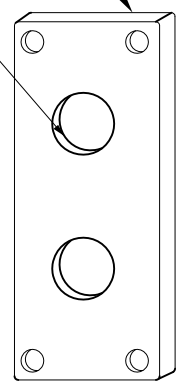

DETAIL B

PERSPEX FOR HALL CALL BUTTON

ANTI–VANDALISME FEATURES

N.T.S

NOTE:

1. This is a tender drawing and should not be taken as working drawing.
2. The standard details shown shall serve as guidelines only, contractor shall install and modify if necessary to suit the site condition and subject to S.O approval.

JKR MEKANIKAL

JASA KEPADA RAKYAT

CAWANGAN KEJURUTERAAN MEKANIKAL
Ibu Pejabat JKR Malaysia

DATE	SCALE
2017	NTS

DRAWING NUMBER

CKM/STD/LF/REV2017/06

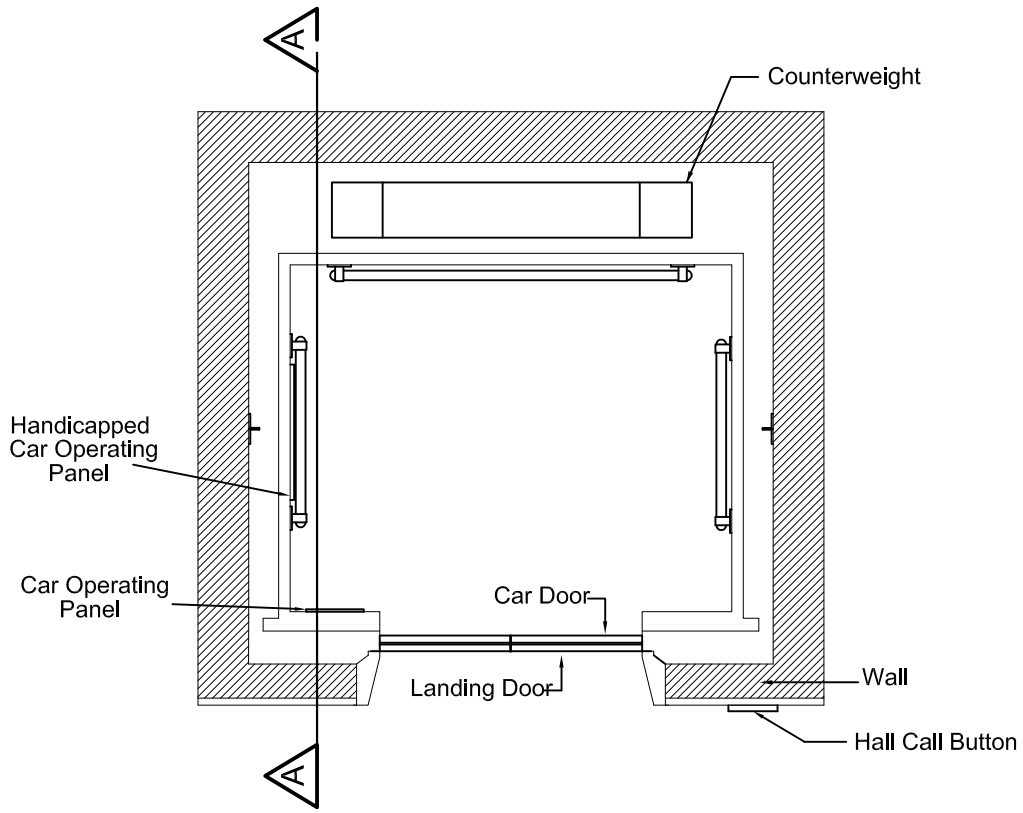

PLAN VIEW

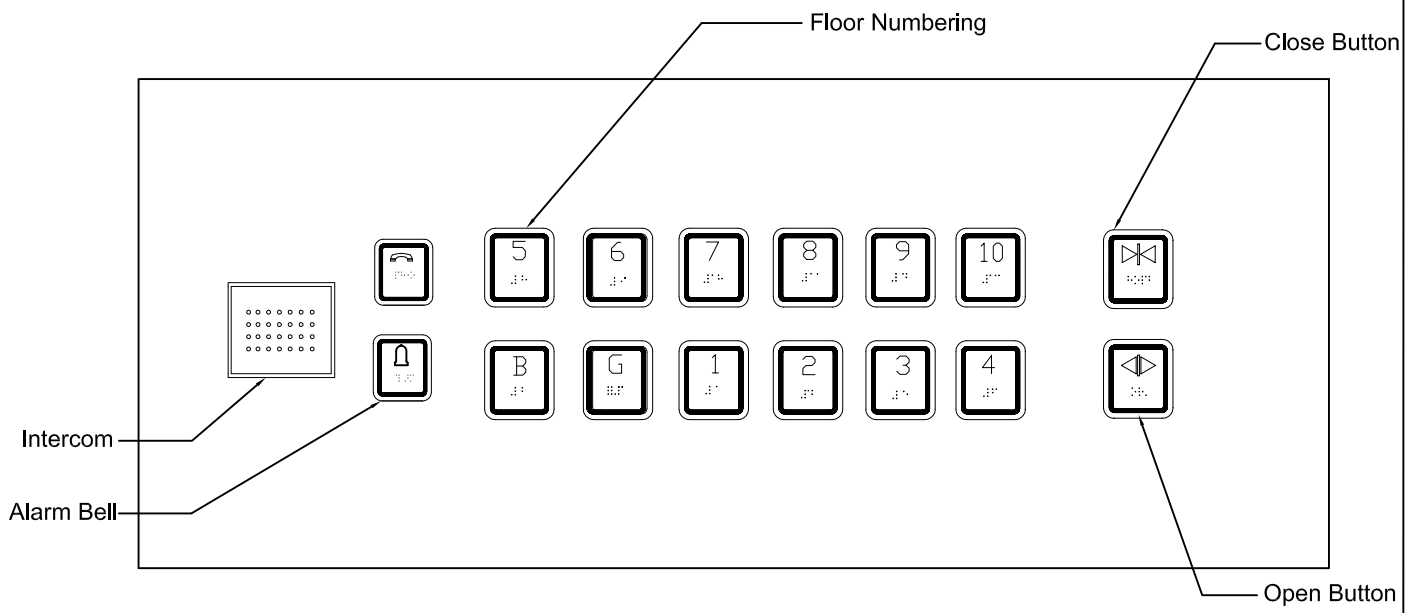

Car Operating Panel With Handicapped Features

DETAIL A

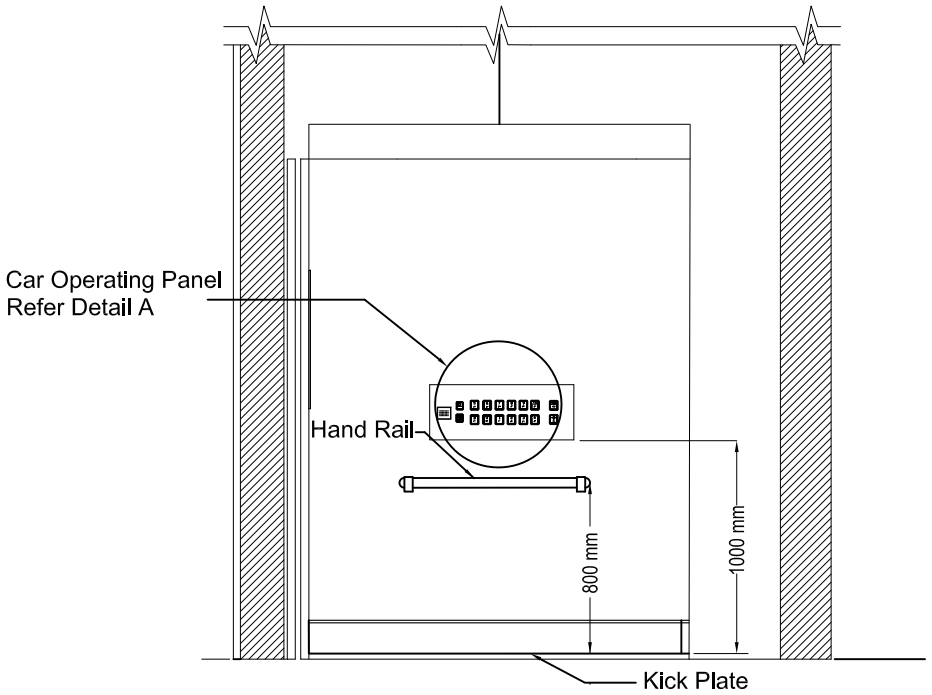

SECTION A-A

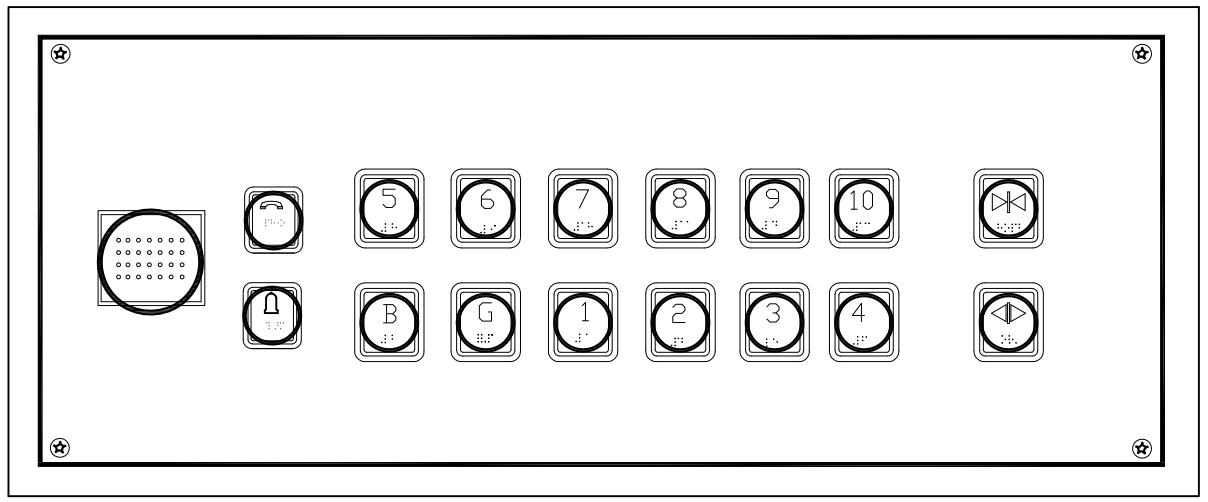

Car Operating Panel For Handicapped With Perspex Cover

DETAIL OF HANDICAPPED FEATURES

N.T.S

NOTE:

1. This is a tender drawing and should not be taken as working drawing.
2. The standard details shown shall serve as guidelines only, contractor shall install and modify if necessary to suit the site condition and subject to S.O approval.

JKR MEKANIKAL

JASA KEPADA RAKYAT

CAWANGAN KEJURUTERAAN MEKANIKAL
Ibu Pejabat JKR Malaysia

LUKISAN PERINCIAN PIAWAI PEMASANGAN SISTEM LIFT

DETAIL OF HANDICCAPED FEATURES

DATE	SCALE
2017	NTS

DRAWING NUMBER

CKM/STD/LF/REV2017/07

NOTE:

1. Architrave shall be 300 mm for main lobby and for other floors shall be as per Schedule of Design Requirement.
2. Hall Indicator shall be considered at site.

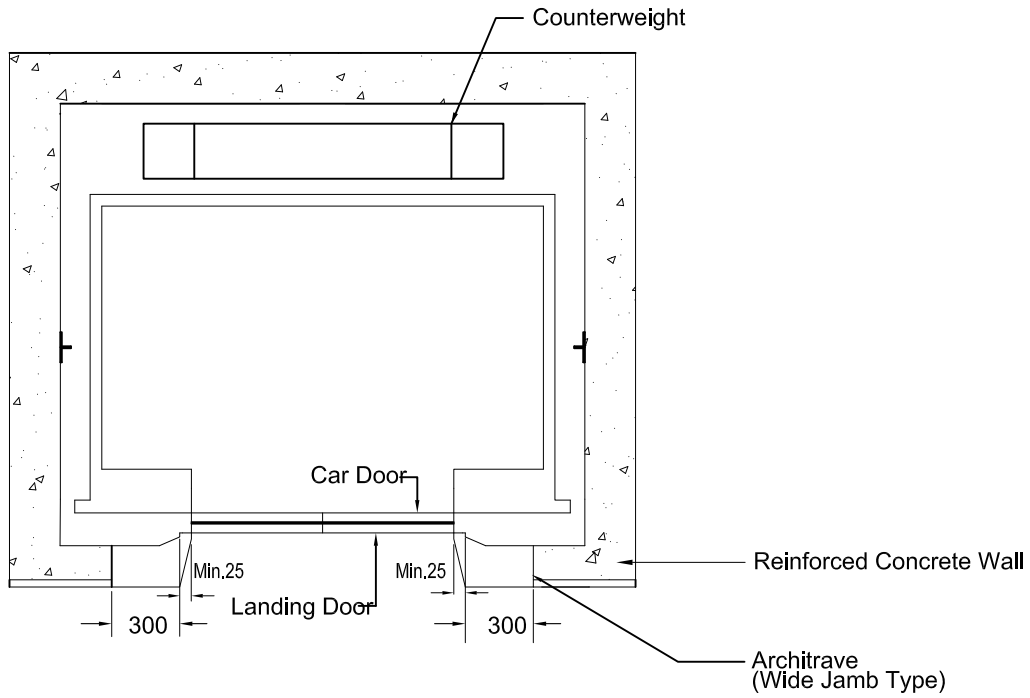

PLAN VIEW

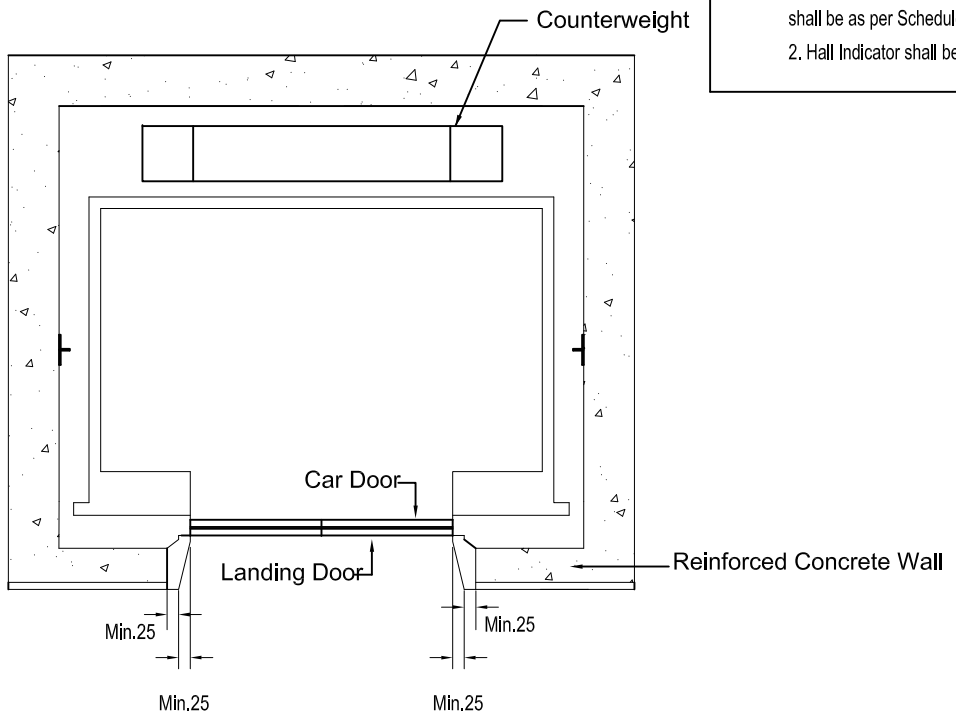

PLAN VIEW

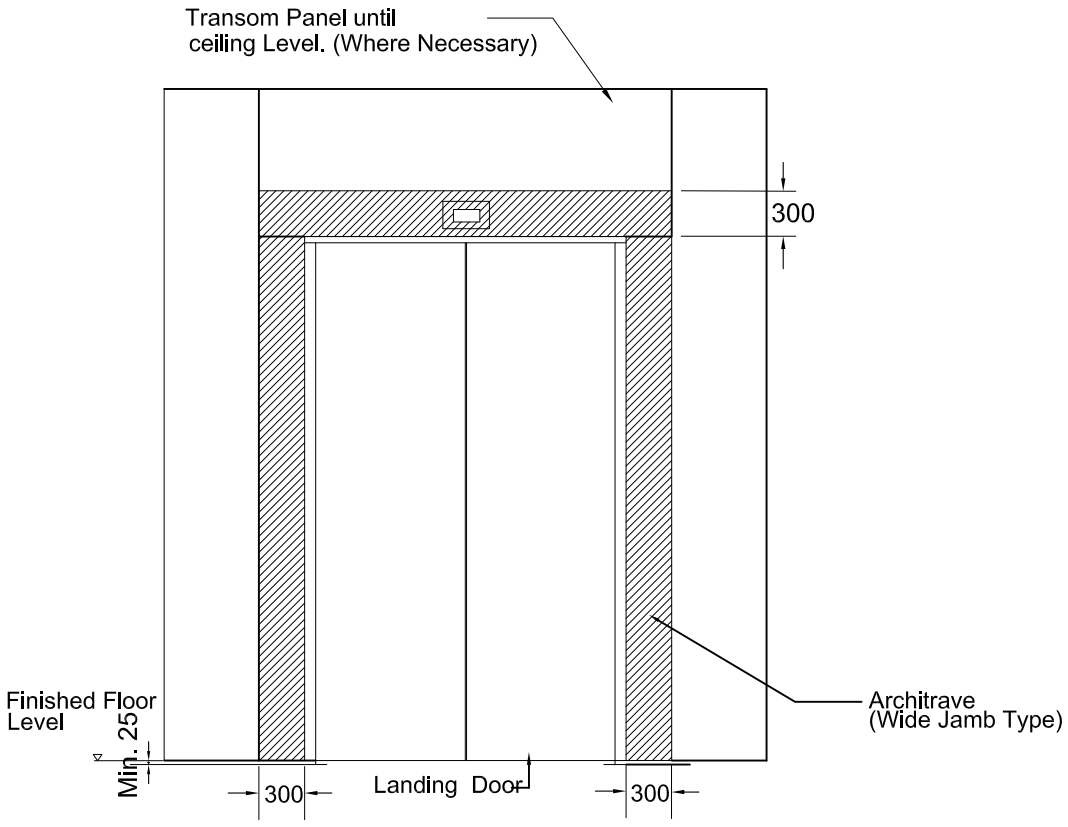

FRONT VIEW

MAIN LOBBY

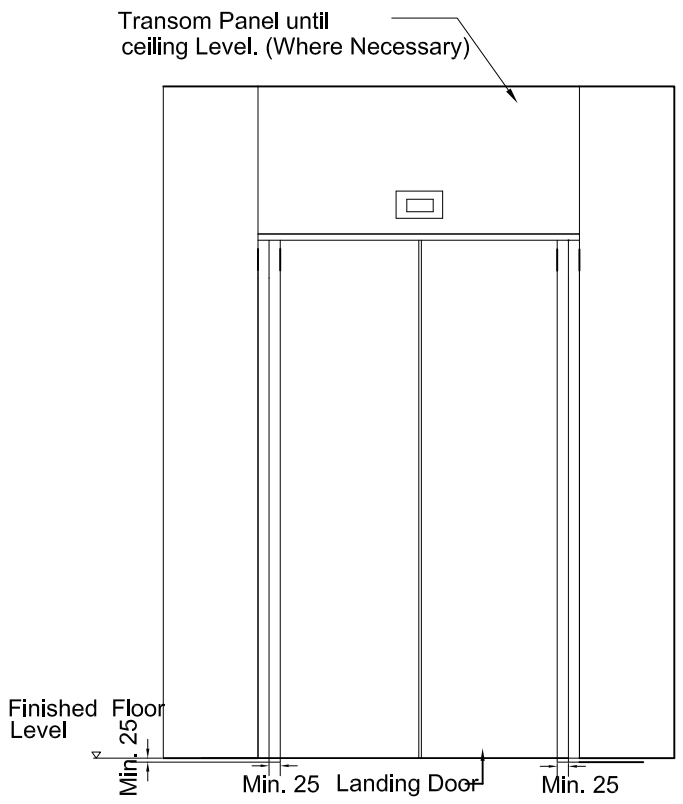

FRONT VIEW

OTHER TYPICAL FLOORS

DETAIL OF ARCHITRAVE

N.T.S

JASA KEPADA RAKYAT

CAWANGAN KEJURUTERAAN MEKANIKAL
Ibu Pejabat JKR Malaysia

LUKISAN PERINCIAN PIAWAI PEMASANGAN SISTEM LIFT

DETAIL OF ARCHITRAVE

DATE	SCALE
2017	NTS

DRAWING NUMBER

CKM/STD/LF/REV2017/08

NOTE: 1. Refer Table 2 for minimum size of hospital's lift.

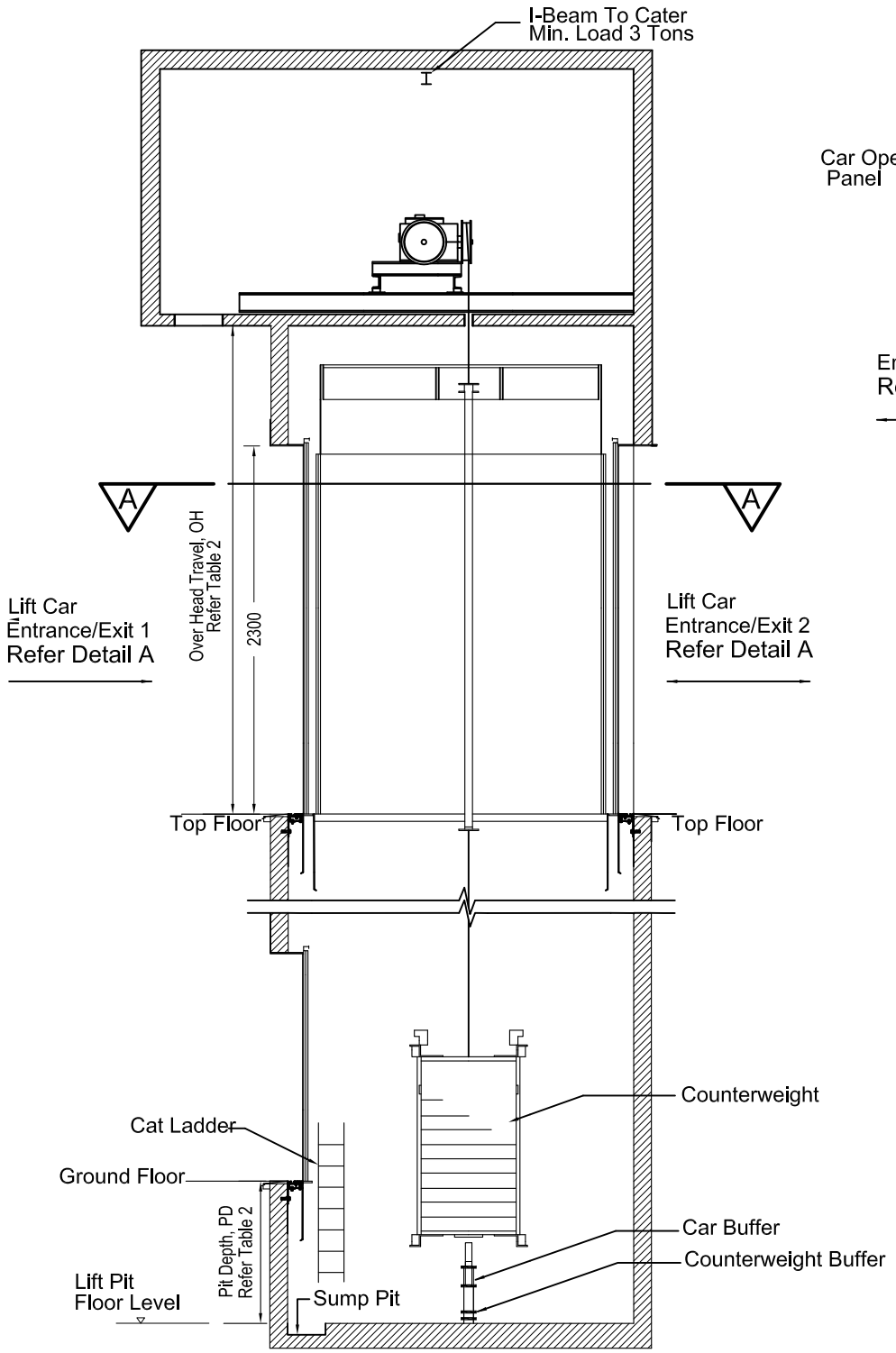

CROSS SECTION VIEW

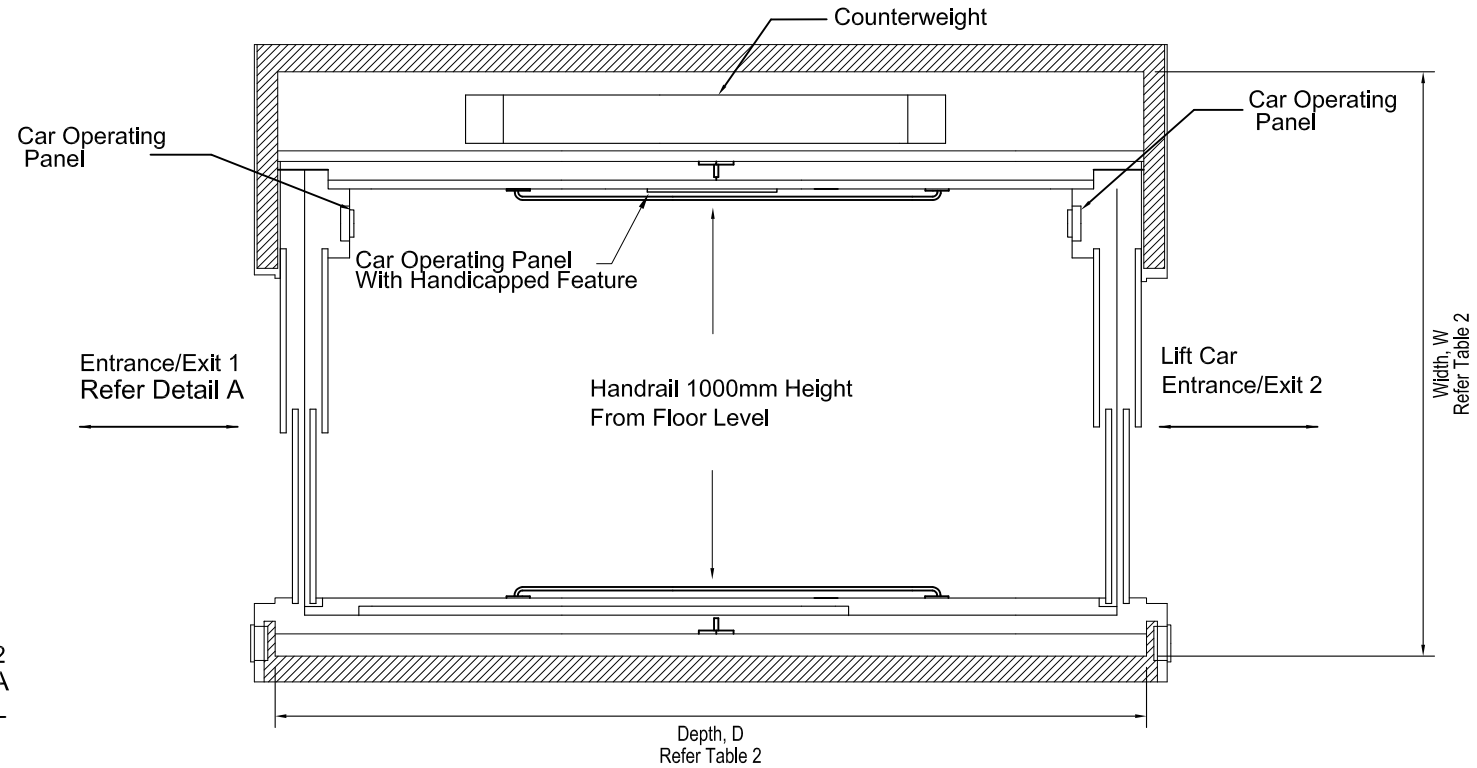

SECTION A-A

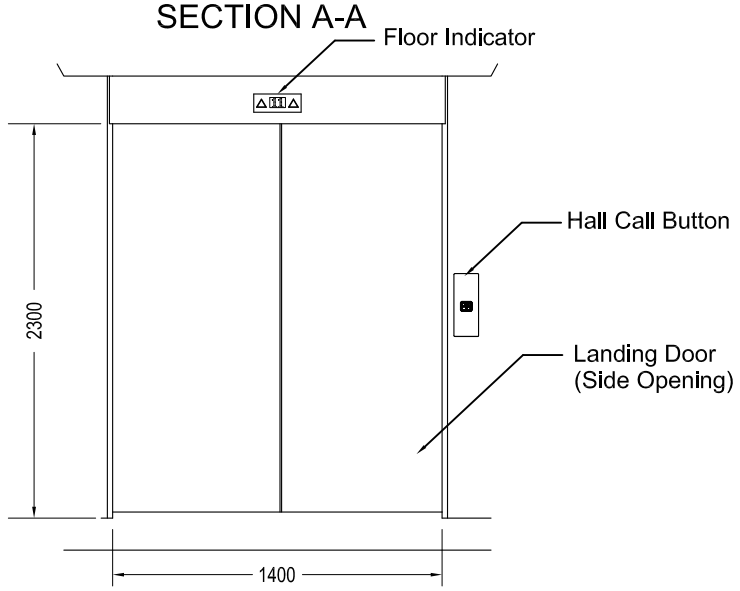

DETAIL A

TABLE 2: MINIMUM SIZE FOR HOSPITAL (STRECHER/BED LIFT)

LIFT CAPACITY (Kg)/TYPE	Internal Car Size (mm) [W x D]	SPEED (m/s)	OPENING DOOR (mm)	LIFT SHAFT CLEARANCE (HOISTWAY) DIMENSIONS(mm)				STRUCTURAL OPENING FOR EACH LANDING DOOR (mm)	
				PIT DEPTH (PD)	OVER HEAD TRAVEL (OH)	WIDTH (W)	DEPTH (D)	WIDTH (SW)	HEIGHT (SH)
1,600 KG STRETHCER	1,400x2,400	1.0	1,400	1,900	5,100	3,000	3,400	1,600	2,300
1,600 KG STRETHCER	1,400x2,400	1.5–2.0	1,400	2,100	5,200	3,000	3,400	1,600	2,300
1,800 KG GOODS LIFT	1,600x2,400	1.0	1,400	1,900	5,100	3,000	3,400	1,600	2,300
1,800 KG GOODS LIFT	1,600x2,400	1.5	1,400	2,100	5,200	3,000	3,400	1,600	2,300
2,500 KG ICU BED	1,800x2,700	1.0–1.5	1,400	2,100	5,200	3,000	3,700	1,600	2,300

NOTE:

1. This is a tender drawing and should not be taken as working drawing.
2. The standard details shown shall serve as guidelines only, contractor shall install and modify if necessary to suit the site condition and subject to S.O approval.

JKR MEKANIKAL

JASA KEPADA RAKYAT

CAWANGAN KEJURUTERAAN MEKANIKAL
Ibu Pejabat JKR Malaysia

LUKISAN PERINCIAN PIAWAI PEMASANGAN SISTEM LIFT

DETAIL OF THROUGH DOOR LIFT

DATE	SCALE
2017	NTS

DRAWING NUMBER

CKM/STD/LF/REV2017/09

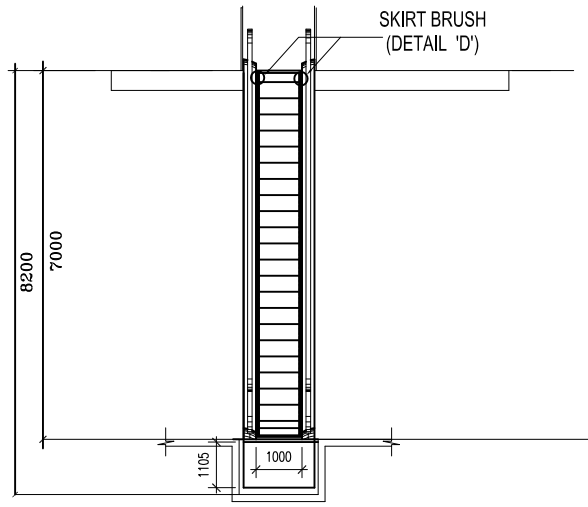

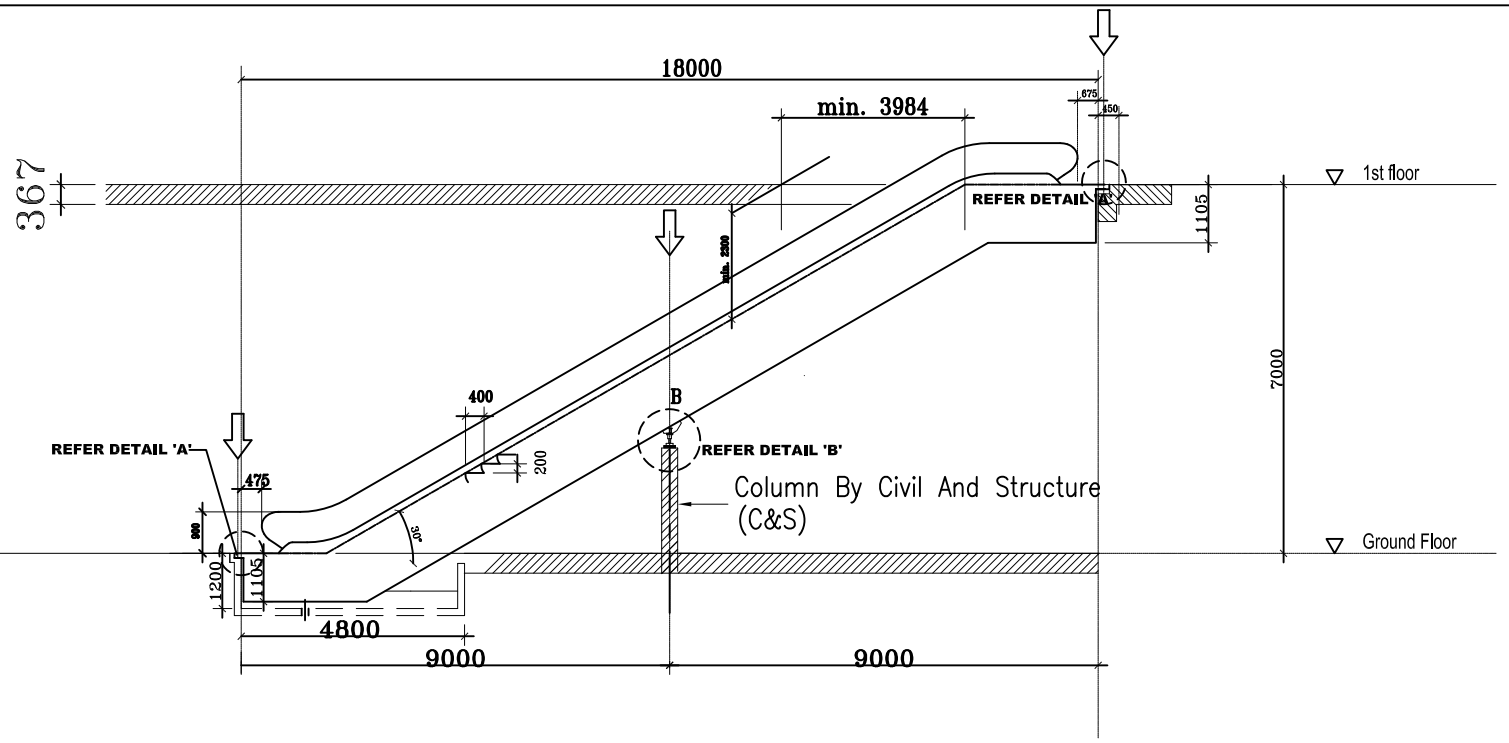

FRONT VIEW

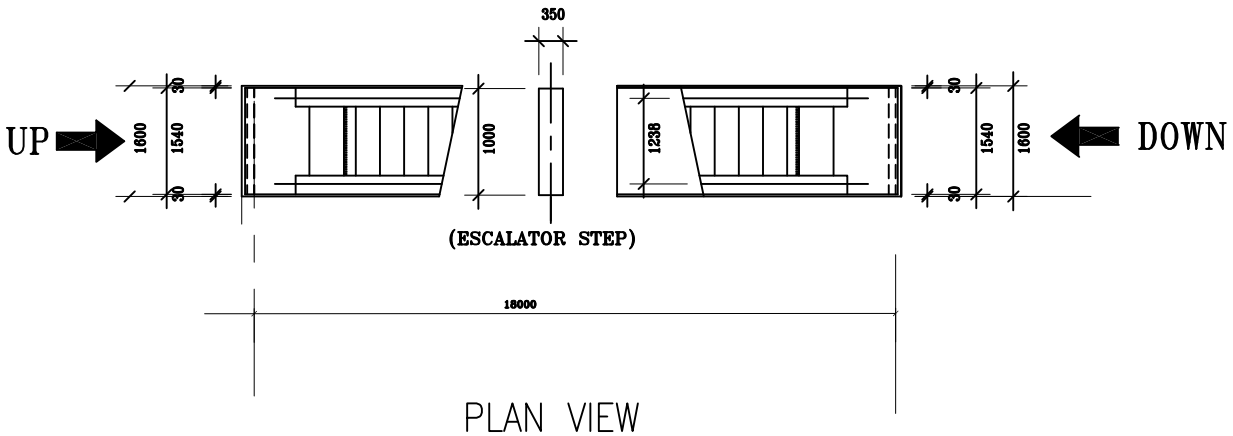

PLAN VIEW

SIDE VIEW

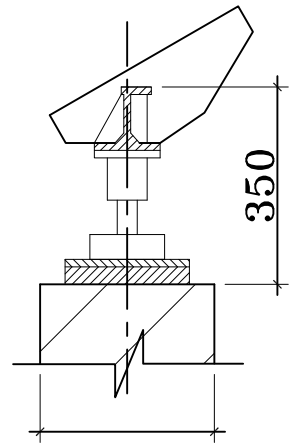

min. 350mm
(Scale – NOT TO SCALE)

DETAIL B

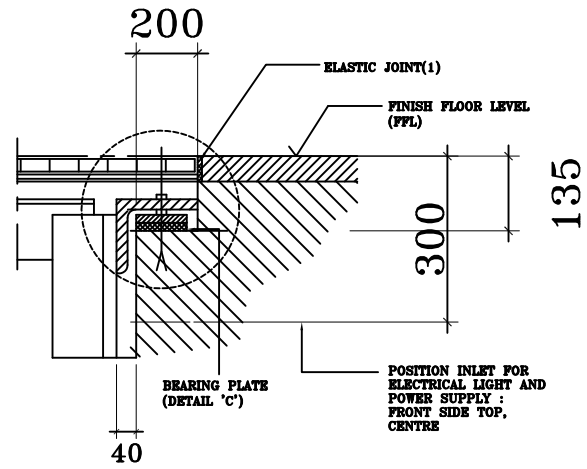

DETAIL A
(Scale – NOT TO SCALE)

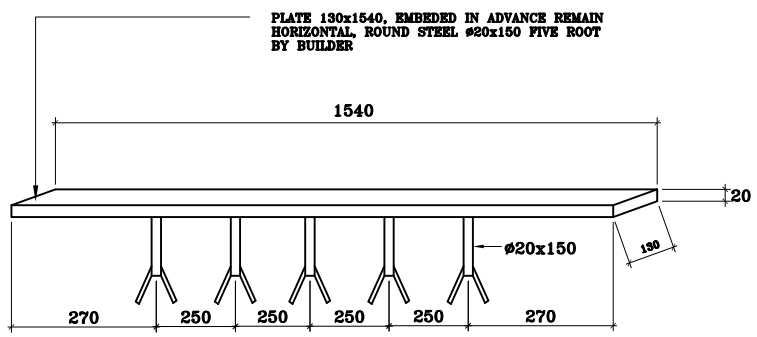

BEARING PLATE DETAIL 'C'
(By Civil And Structure (C&S))

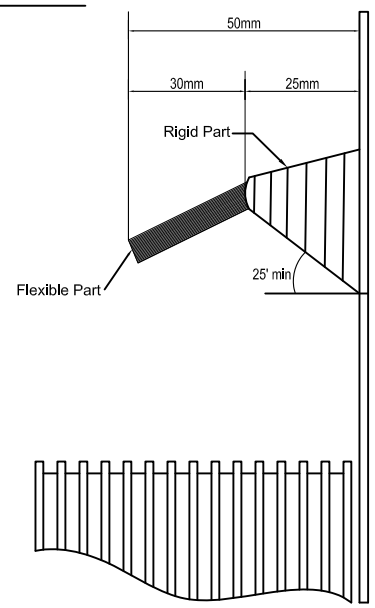

SKIRT BRUSH
(DETAIL 'D')

NOTE:

1. This is a tender drawing and should not be taken as working drawing.
2. The standard details shown shall serve as guidelines only, contractor shall install and modify if necessary to suit the site condition and subject to S.O approval.
2. Detail B- Column
   The supporting structure shall be dewigned in a way that it can support the dead weight of the escalator plus a rated load of 5000 N/m2.
   Based on the rated load, the maximum calculated or measured deflection shall not exceed 1/750 of the distance between the supports and shall comply BS EN115-1:2008

JKR
MEKANIKAL

JASA KEPADA RAKYAT

CAWANGAN KEJURUTERAAN MEKANIKAL
Ibu Pejabat JKR Malaysia

ESCALATOR DETAIL

DATE	SCALE
2017	NTS

DRAWING NUMBER
CKM/STD/ESCALATOR/REV2017/01

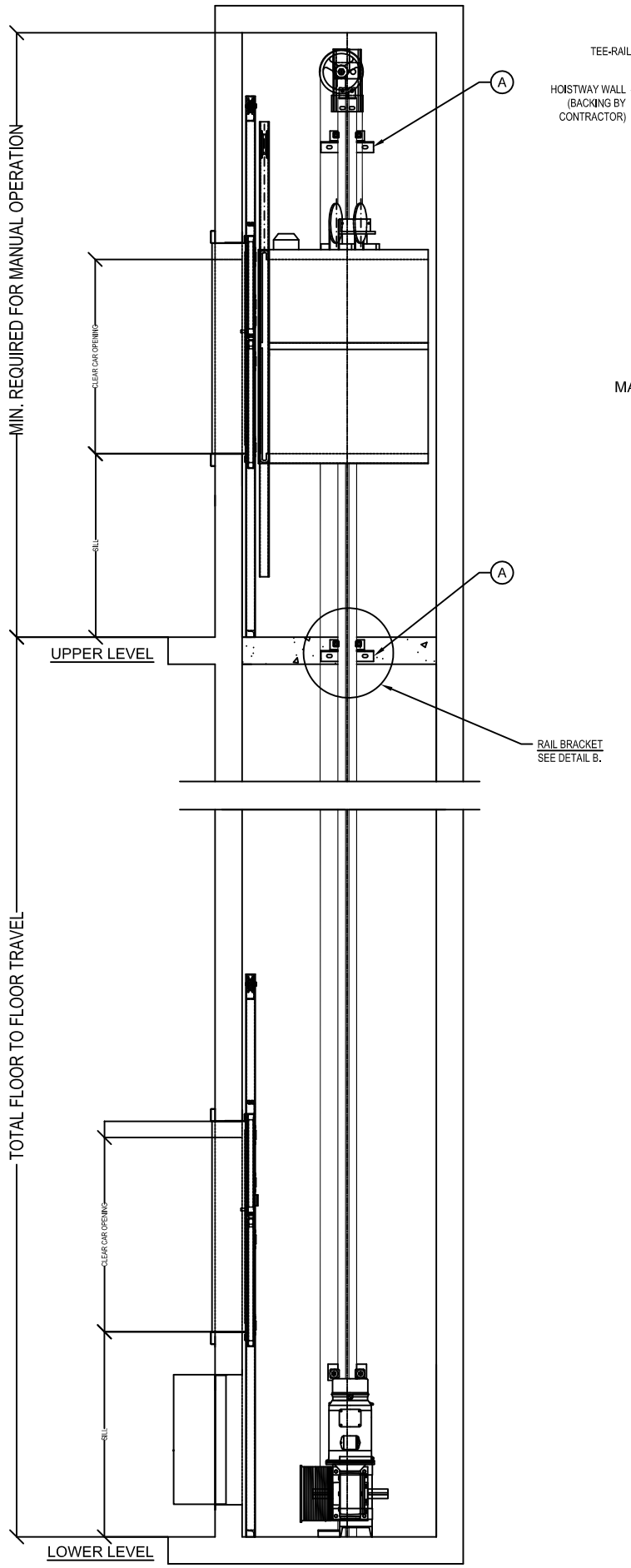

VIEW A-A ELEVATION

nts

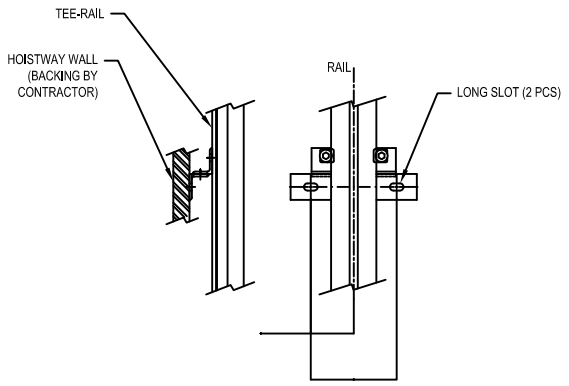

MAX VERTICAL BRACKET SPACING (Refer Specification)

DETAIL A

RAIL BRACKET ASSEMBLY

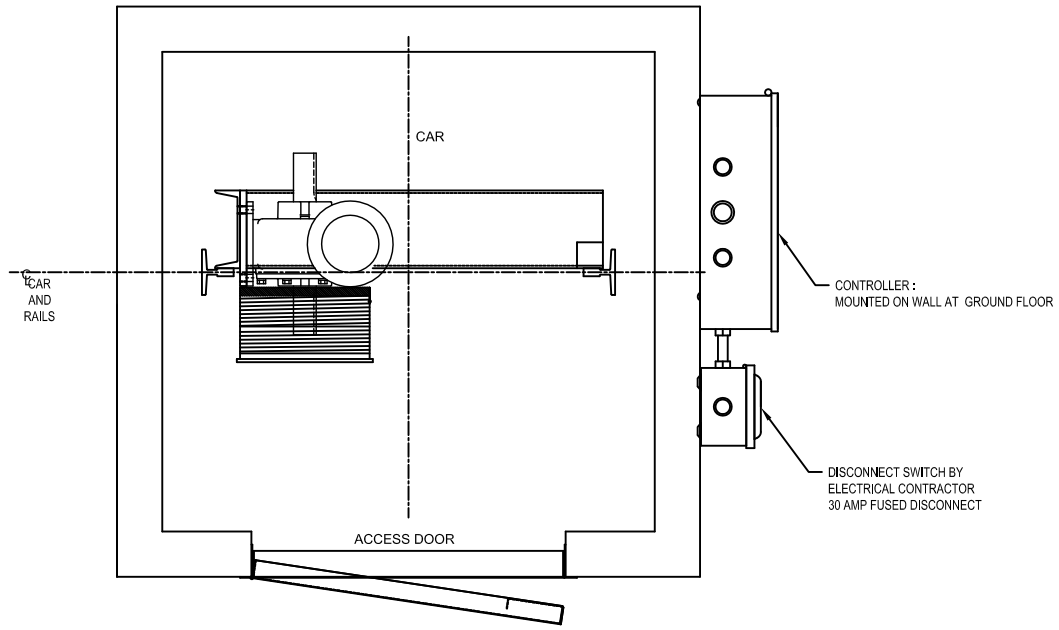

MACHINE PLAN

nts

HOISTWAY DIMENSIONS WILL CHANGE PROPORTIONALLY TO CAR SIZE CHANGES

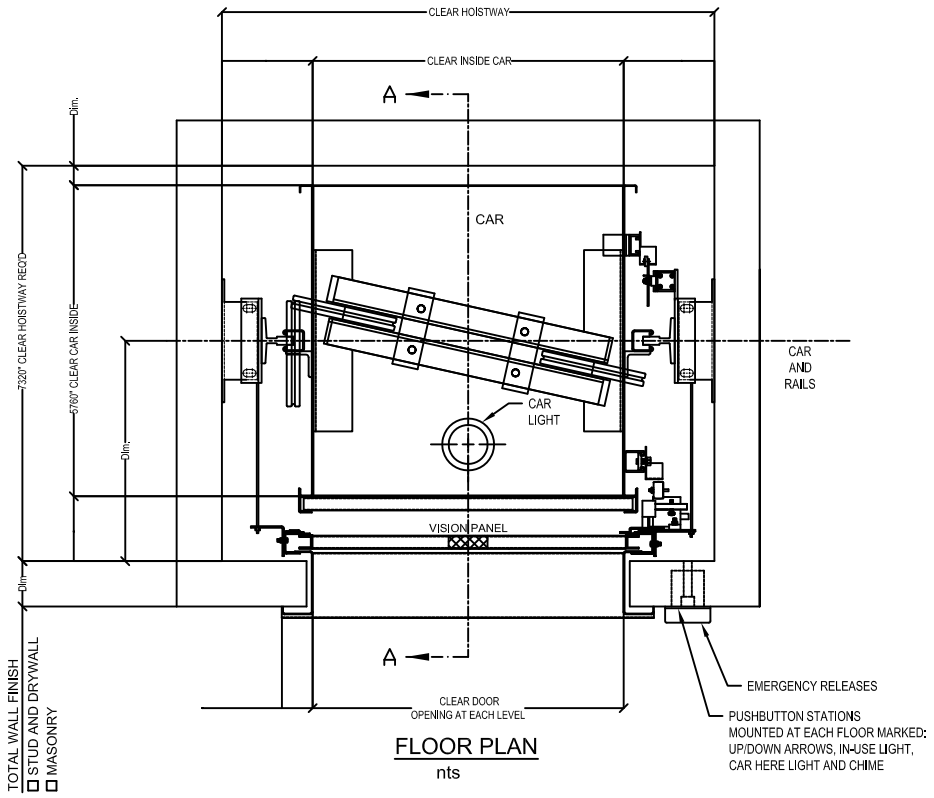

FLOOR PLAN

nts

NOTE:

1. This is a tender drawing and should not be taken as working drawing.
2. The standard details shown shall serve as guidelines only, contractor shall install and modify if necessary to suit the site condition and subject to S.O approval.
3. mm- Dimension as per specification & design requirement

JASA KEPADA RAKYAT

CAWANGAN KEJURUTERAAN MEKANIKAL
Ibu Pejabat JKR Malaysia

TYPICAL DUMB WAITER EQUIPMENT

DATE	SCALE
2017	NTS

DRAWING NUMBER

CKM/STD/DUMB WAITER/REV2017/01

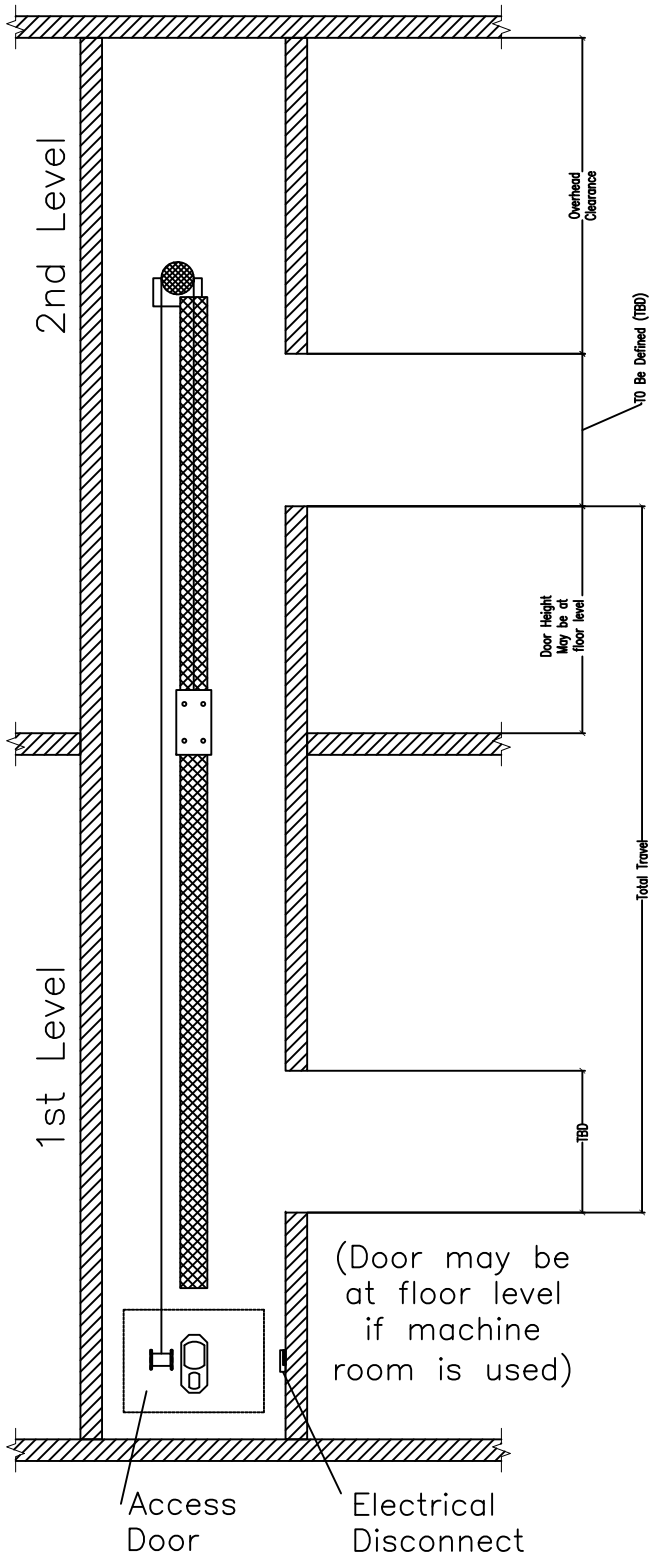

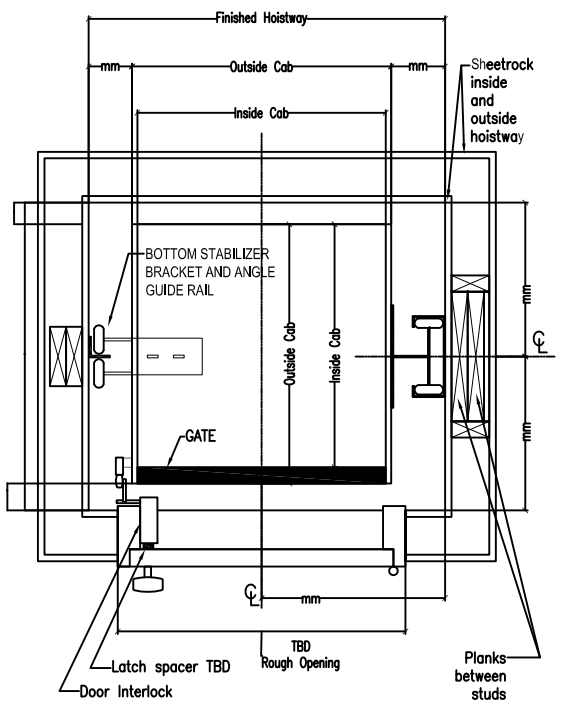

TYPICAL DUMBWAITER INSTALLATION (SAME SIDE)
(WITH PIT AT GROUND LEVEL)

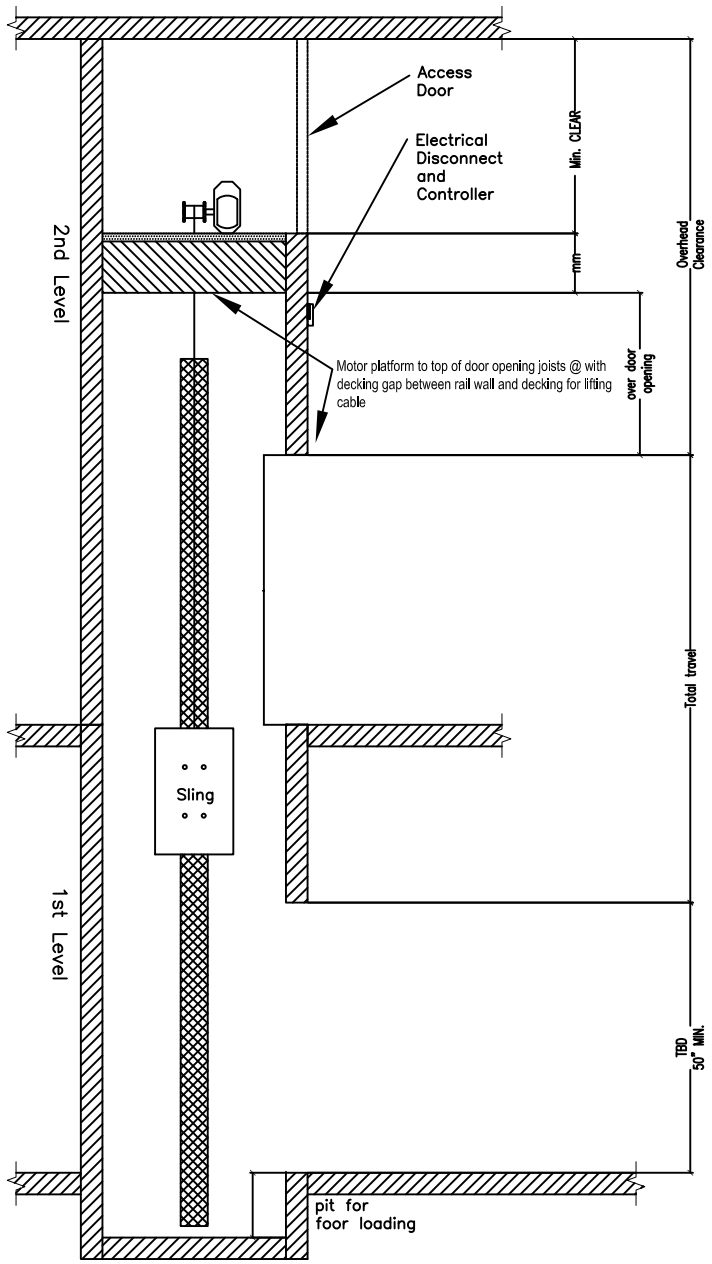

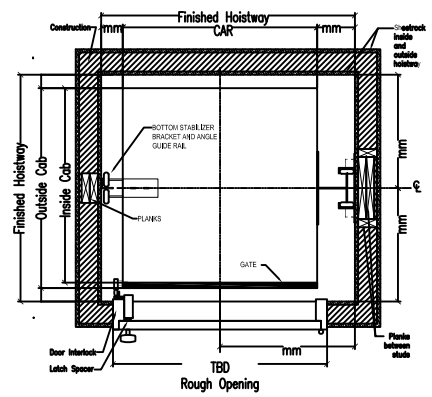

TYPICAL DUMBWAITER INSTALLATION (SAME SIDE)
(WITH PIT OVERHEAD MOTOR)

NOTE:

1. This is a tender drawing and should not be taken as working drawing.
2. The standard details shown shall serve as guidelines only, contractor shall install and modify if necessary to suit the site condition and subject to S.O approval.
3. mm- Dimension as per specification & design requirement

JKR MEKANIKAL

JASA KEPADA RAKYAT

CAWANGAN KEJURUTERAAN MEKANIKAL
Ibu Pejabat JKR Malaysia

TYPICAL DUMB WAITER INSTALLATION
(SAME SIDE)

DATE	SCALE
2017	NTS

DRAWING NUMBER
CKM/STD/DUMB WAITER/REV2017/02

TYPICAL DUMBWAITER INSTALLATION (SAME SIDE)

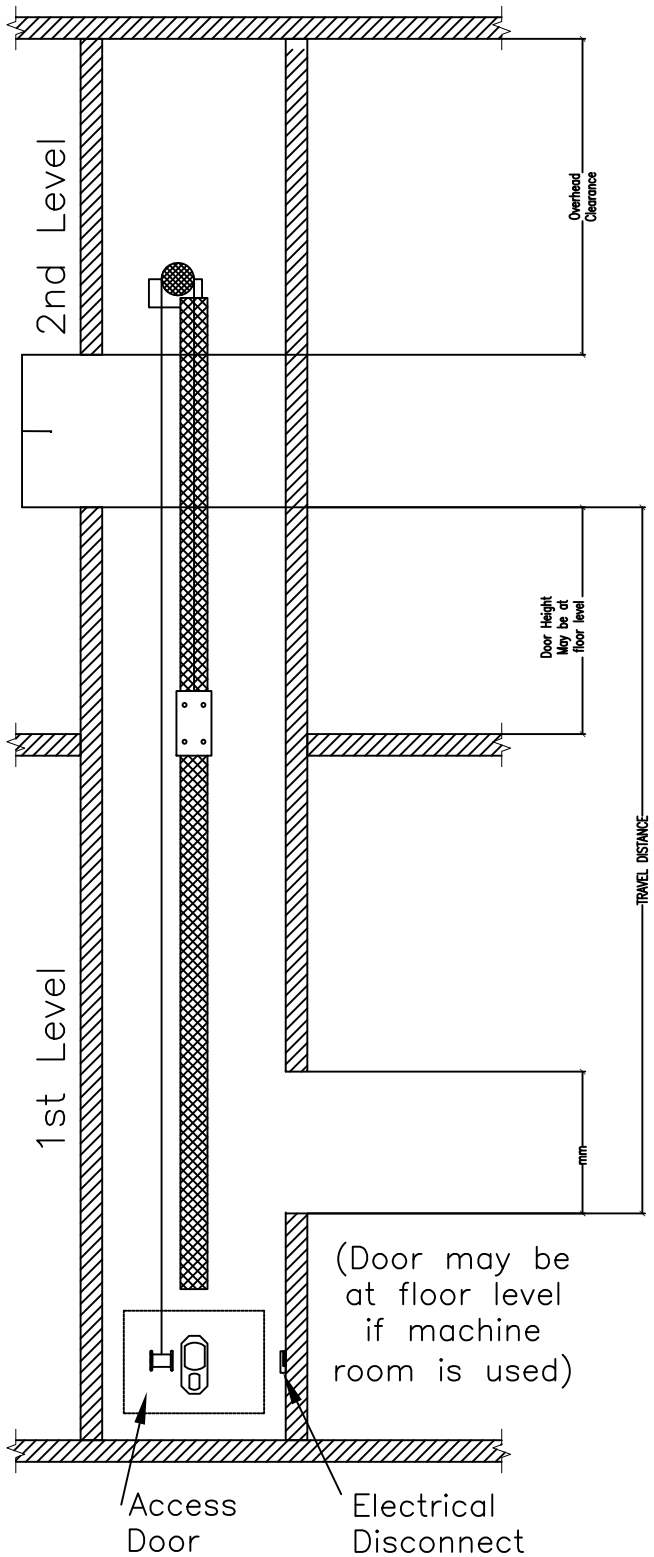

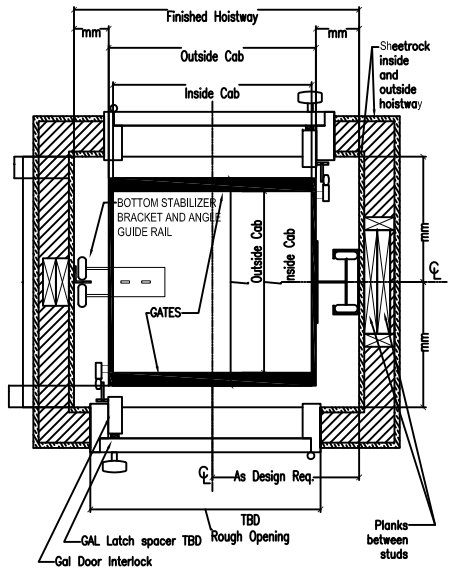

TYPICAL DUMBWAITER INSTALLATION (FRONT BACK)
(WITH PIT AT GROUND LEVEL)

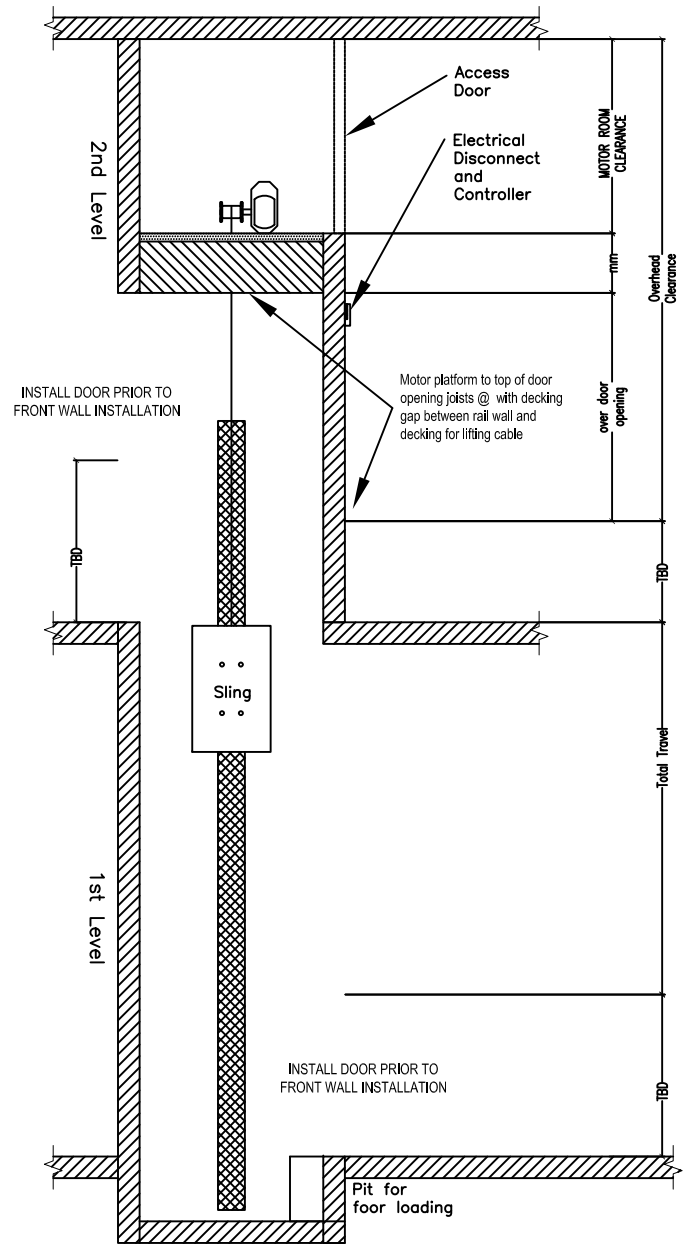

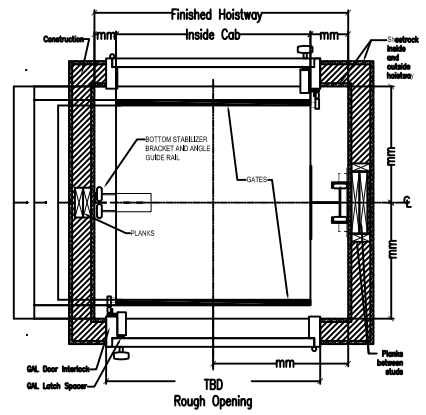

TYPICAL DUMBWAITER INSTALLATION (FRONT BACK)
(WITH PIT OVERHEAD MOTOR)

NOTE:

1. This is a tender drawing and should not be taken as working drawing.
2. The standard details shown shall serve as guidelines only, contractor shall install and modify if necessary to suit the site condition and subject to S.O approval.
3. mm- Dimension as per specification & design requirement

JASA KEPADA RAKYAT

CAWANGAN KEJURUTERAAN MEKANIKAL
Ibu Pejabat JKR Malaysia

TYPICAL DUMB WAITER INSTALLATION
(FRONT BACK)

DATE	SCALE
2017	NTS

DRAWING NUMBER
CKM/STD/DUMB WAITER/REV2017/03

TYPICAL DUMBWAITER INSTALLATION (FRONT BACK)

STANDARD MECHANICAL DESIGN DETAIL DRAWING FOR MECHANICAL SYSTEMS IN BUILDINGS

SECTION IV : INTERNAL COLD WATER AND SANITARY PLUMBING SYSTEM

CAWANGAN KEJURUTERAAN MEKANIKAL
IBU PEJABAT JKR MALAYSIA
KUALA LUMPUR

JKR
MEKANIKAL

JASA KEPADA RAKYAT

2017

LIST OF DRAWINGS

NO.	DRAWING TITLE	DRAWING NUMBER
A	INTERNAL COLD WATER AND SANITARY PLUMBING SYSTEM	
1	ADJUSTABLE STEEL BAND HANGER	CKM/STD/CWSP/PIPE/REV2017/01
2	ADJUSTABLE CLEVIS HANGER	CKM/STD/CWSP/PIPE/REV2017/02
3	U–BOLT HANGER	CKM/STD/CWSP/PIPE/REV2017/03
4	PIPE CLIPS VERTICAL SUPPORT	CKM/STD/CWSP/PIPE/REV2017/04
5	U–BOLT VERTICAL SUPPORT	CKM/STD/CWSP/PIPE/REV2017/05
6	ADJUSTABLE BAND HANGER DETAILS	CKM/STD/CWSP/PIPE/REV2017/06
7	ADJUSTABLE CLEVIS HANGER DETAILS	CKM/STD/CWSP/PIPE/REV2017/07
8	U–BOLT (NOT TO GRIP PIPE) DETAILS	CKM/STD/CWSP/PIPE/REV2017/08
9	TYPICAL HORIZONTAL PIPE ARRANGEMENT USING U–BOLT HANGER	CKM/STD/CWSP/PIPE/REV2017/09
10	SPACING BETWEEN VARIOUS SIZE OF PIPE USING U–BOLT HANGER	CKM/STD/CWSP/PIPE/REV2017/10
11	PIPE CLIPS SUPPORT DETAILS	CKM/STD/CWSP/PIPE/REV2017/11
12	RECOMMENDED INSTALLATION FOR HORIZONTAL PIPE CLIPS SUPPORT	CKM/STD/CWSP/PIPE/REV2017/12
13	DETAIL OF ABS PIPE THERMAL EXPANSION	CKM/STD/CWSP/PIPE/REV2017/13
14	DETAIL OF PIPE SLEEVE THROUGH FLOOR / SLAB	CKM/STD/CWSP/PIPE/REV2017/14
15	DETAIL OF PIPE SLEEVE THROUGH WALL	CKM/STD/CWSP/PIPE/REV2017/15
B	INTERNAL COLD WATER PLUMBING SYSTEM	
1	RECOMMENDED INSTALLATION METHOD OF INCOMING STAINLESS STEEL PIPE FOR HOT WATER CYLINDER	CKM/STD/CWSP/CW/REV2017/01
2	RECOMMENDED INSTALLATION METHOD OF INCOMING HDPE PIPE FOR HOT WATER CYLINDER	CKM/STD/CWSP/CW/REV2017/02
3	TYPICAL INSTALLATION OF PLASTIC PIPE LAY IN CONCRETE	CKM/STD/CWSP/CW/REV2017/03
4	DETAILS OF HDPE TANK INSTALLATION	CKM/STD/CWSP/CW/REV2017/04
5	DETAILS OF POLY TANK INSTALLATION	CKM/STD/CWSP/CW/REV2017/05
6	DETAILS OF FRP TANK INSTALLATION	CKM/STD/CWSP/CW/REV2017/06
7	DETAILS OF FRP TANK–PIPE & MANHOLE INSTALLATION	CKM/STD/CWSP/CW/REV2017/07
8	DETAILS OF FRP TANK–STEEL BASE INSTALLATION	CKM/STD/CWSP/CW/REV2017/08
9	DETAILS OF FRP TANK INTERNAL REINFORCEMENT SUPPORT & PANEL	CKM/STD/CWSP/CW/REV2017/09
10	DETAILS OF WATER LEVEL INDICATOR INSTALLATION	CKM/STD/CWSP/CW/REV2017/10
11	INSTALLATION METHOD OF WATER HAMMER ARRESTER (WHA) FOR PRESSURE NOT EXCEEDING 150 PSI (10.3 BAR)	CKM/STD/CWSP/CW/REV2017/11
12	INSTALLATION METHOD OF WATER HAMMER ARRESTER (WHA) FOR PRESSURE NOT EXCEEDING 232 PSI (16 BAR)	CKM/STD/CWSP/CW/REV2017/12
13	TYPICAL DETAILS OF PACKAGE BOOSTER PUMP SYSTEM INSTALLATION	CKM/STD/CWSP/CW/REV2017/13
14	DETAILS FOR BOOSTER PUMP	CKM/STD/CWSP/CW/REV2017/14
15	TYPICAL BOOSTER PUMP SWTICHBOARD	CKM/STD/CWSP/CW/REV2017/15
16	SCHEMATIC DETAILS OF PACKAGE BOOSTER PUMP SYSTEM	CKM/STD/CWSP/CW/REV2017/16
17	DETAILS OF FLANGE & NEOPRENE PAD INSTALLATION	CKM/STD/CWSP/CW/REV2017/17
18	DETAILS OF PRESSURE REDUCING VALVE (PRV) INSTALLATION	CKM/STD/CWSP/CW/REV2017/18

NOTE:

1. This is a tender drawing and should not be taken as working drawing.
2. The standard details shown shall serve as guidelines only, contractor shall install and modify if necessary to suit the site condition and subject to S.O approval.

JKR MEKANIKAL

JASA KEPADA RAKYAT

CAWANGAN KEJURUTERAAN MEKANIKAL
Ibu Pejabat JKR Malaysia

INTERNAL COLD WATER AND SANITARY PLUMBING SYSTEM

LIST OF DRAWINGS

DATE	SCALE
2017	NTS

LIST OF DRAWINGS

NO.	DRAWING TITLE	DRAWING NUMBER
C	SANITARY PLUMBING SYSTEM	
1	DETAILS OF SANITARY PIPE INSTALLATION FOR SINK–GROUND FLOOR	CKM/STD/CWSP/SP/REV2017/01
2	DETAILS OF SANITARY PIPE INSTALLATION FOR ASIAN WATER CLOSET (AWC)–GROUND FLOOR	CKM/STD/CWSP/SP/REV2017/02
3	DETAILS OF SANITARY PIPE INSTALLATION FOR EUROPEAN WATER CLOSET (EWC)–GROUND FLOOR	CKM/STD/CWSP/SP/REV2017/03
4	DETAILS OF SANITARY PIPE INSTALLATION FOR BASIN & FLOOR TRAP–ABOVE GROUND FLOOR	CKM/STD/CWSP/SP/REV2017/04
5	DETAILS OF SANITARY PIPE INSTALLATION FOR EUROPEAN WATER CLOSET (EWC) ABOVE GROUND FLOOR	CKM/STD/CWSP/SP/REV2017/05
6	DETAILS OF SANITARY PIPE INSTALLATION FOR ASIAN WATER CLOSET (AWC)–ABOVE GROUND FLOOR	CKM/STD/CWSP/SP/REV2017/06
7	DETAILS OF SANITARY PIPE INSTALLATION FOR FLOOR TRAP UNDER GROUND	CKM/STD/CWSP/SP/REV2017/07
8	DETAILS OF SANITARY PIPE INSTALLATION FOR FLOOR TRAP ABOVE GROUND	CKM/STD/CWSP/SP/REV2017/08
9	DETAILS OF VENT COWL INSTALLATION	CKM/STD/CWSP/SP/REV2017/09
10	DETAILS OF GULLY TRAP INSTALLATION	CKM/STD/CWSP/SP/REV2017/10
11	DETAILS OF GREASE TRAP INSTALLATION	CKM/STD/CWSP/SP/REV2017/11
12	DETAILS OF STAINLESS STEEL OR MILD STEEL WEATHERPROOF LOCKABLE CABINET FOR AUTO DOSING UNIT (ADU) STORAGE	CKM/STD/CWSP/SP/REV2017/12
13	TYPE OF INSTALLATION FOR GREASE TRAP	CKM/STD/CWSP/SP/REV2017/13
14	DETAILS OF INSTALLATION FOR NEUTRALIZATION TANK	CKM/STD/CWSP/SP/REV2017/14
15	DETAILS OF INSPECTION CHAMBER	CKM/STD/CWSP/SP/REV2017/15

NOTE:

1. This is a tender drawing and should not be taken as working drawing.
2. The standard details shown shall serve as guidelines only, contractor shall install and modify if necessary to suit the site condition and subject to S.O approval.

JKR MEKANIKAL

JASA KEPADA RAKYAT

CAWANGAN KEJURUTERAAN MEKANIKAL
Ibu Pejabat JKR Malaysia

INTERNAL COLD WATER AND SANITARY PLUMBING SYSTEM

LIST OF DRAWINGS

DATE	SCALE
2017	NTS

INTERNAL COLD WATER AND SANITARY PLUMBING SYSTEM

JKR
MEKANIKAL

JASA KEPADA RAKYAT

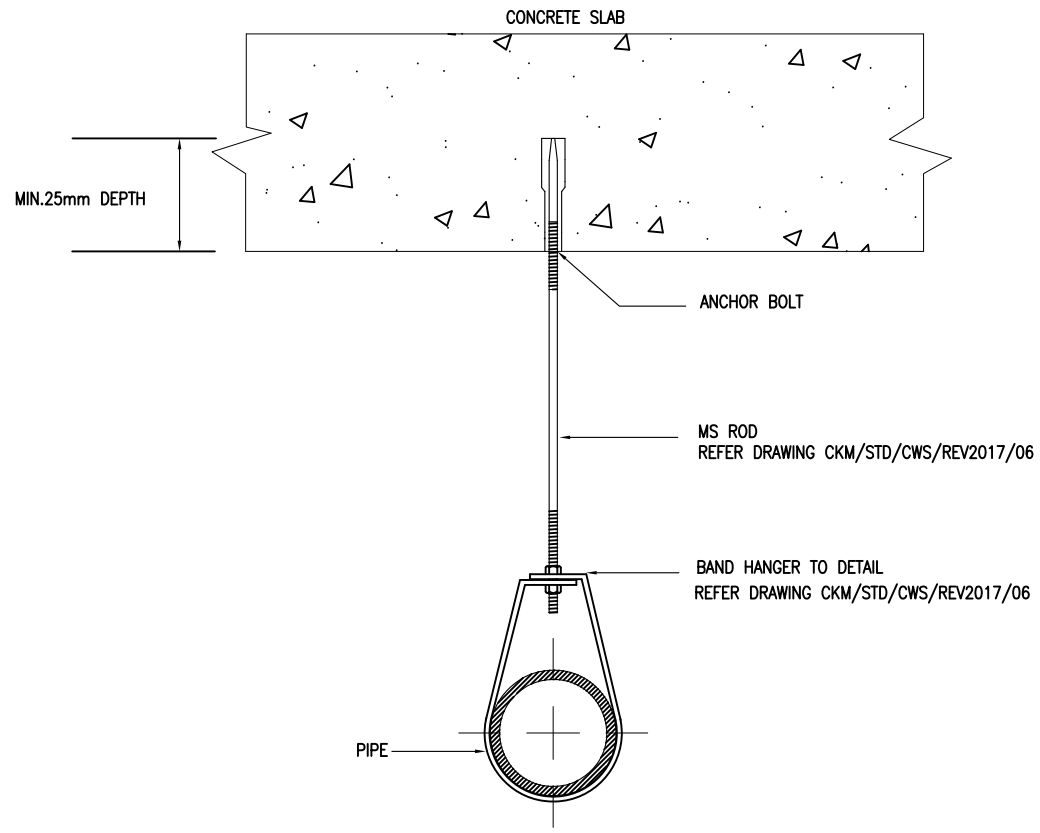

ADJUSTABLE STEEL BAND HANGER

SCALE : NTS

NOTE: For pipe diameter equal or less than 100mm
STEEL BAR (M&E PURLIN) BY MAIN CONTRACTOR

RECOMMENDED MAXIMUM SPACING OF SUPPORT FOR ALL CLASSES OF METAL & NON-METAL PIPE FOR WATER (HORIZONTAL)

PIPE SIZE (mm)	RECOMMENDED MAXIMUM SPACING OF SUPPORTS (m)	
	NON-METAL	METAL
20	0.8	1.5
25	0.85	1.8
32	1.0	2.4
40	1.1	2.4
50	1.25	2.4
80	1.65	3.0
100	1.9	3.0

(SOURCE: British Standard Institude. (2010). BS EN 806-4: Specifications installations inside buildings conveying water for human consumption. Installation)

NOTE: Water temperature should not exceed 65°C

JKR MEKANIKAL

JASA KEPADA RAKYAT

CAWANGAN KEJURUTERAAN MEKANIKAL
Ibu Pejabat JKR Malaysia

INTERNAL COLD WATER AND SANITARY PLUMBING SYSTEM

ADJUSTABLE STEEL BAND HANGER

DATE:	SCALE:
2017	NTS

DRAWING NUMBER:

CKM/STD/CWSP/PIPE/REV2017/01

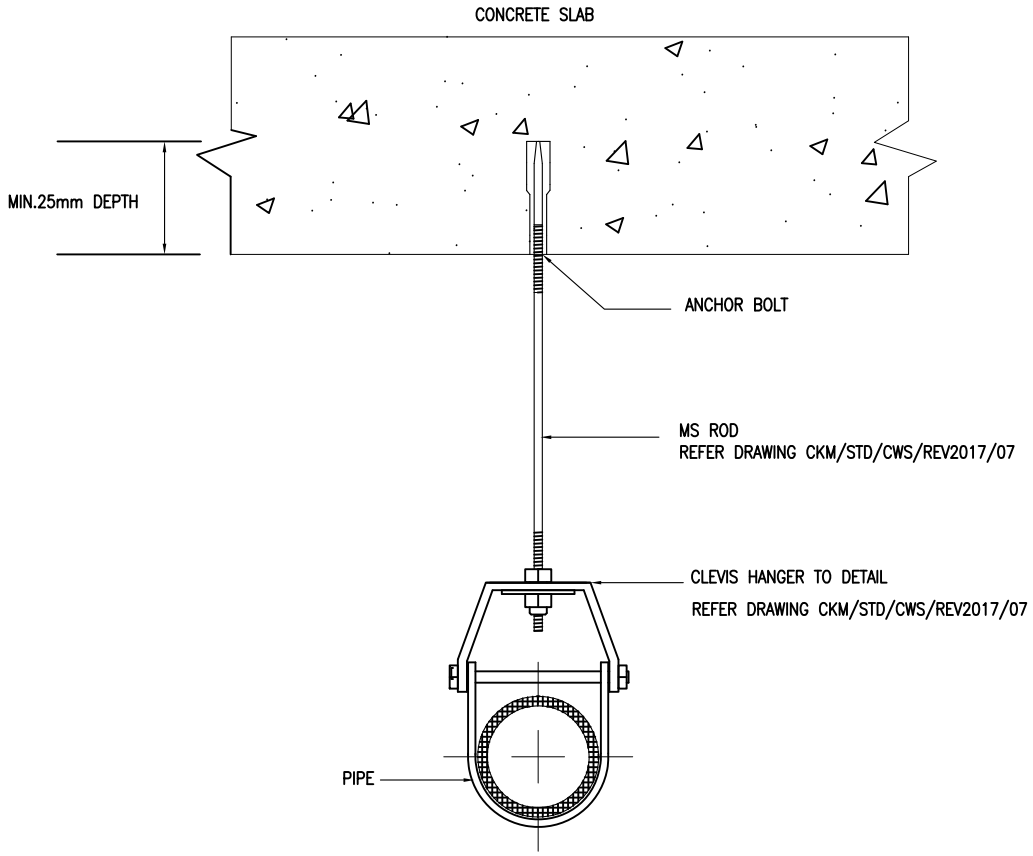

ADJUSTABLE CLEVIS HANGER

SCALE : NTS

NOTE: For pipe diameter more than 100mm
STEEL BAR (M&E PURLIN) BY MAIN CONTRACTOR

RECOMMENDED MAXIMUM SPACING OF SUPPORT FOR ALL CLASSES OF METAL & NON-METAL PIPE FOR WATER (HORIZONTAL)

PIPE SIZE (mm)	RECOMMENDED MAXIMUM SPACING OF SUPPORTS (m)	
	NON-METAL	METAL
20	0.8	1.5
25	0.85	1.8
32	1.0	2.4
40	1.1	2.4
50	1.25	2.4
80	1.65	3.0
100	1.9	3.0

(SOURCE: British Standard Institude. (2010). BS EN 806-4: Specifications installations inside buildings conveying water for human consumption. Installation)

NOTE: Water temperature should not exceed 65°C

JKR MEKANIKAL

JASA KEPADA RAKYAT

CAWANGAN KEJURUTERAAN MEKANIKAL
Ibu Pejabat JKR Malaysia

INTERNAL COLD WATER AND SANITARY PLUMBING SYSTEM

ADJUSTABLE CLEVIS HANGER

DATE: 2017	SCALE: NTS

DRAWING NUMBER:

CKM/STD/CWSP/PIPE/REV2017/02

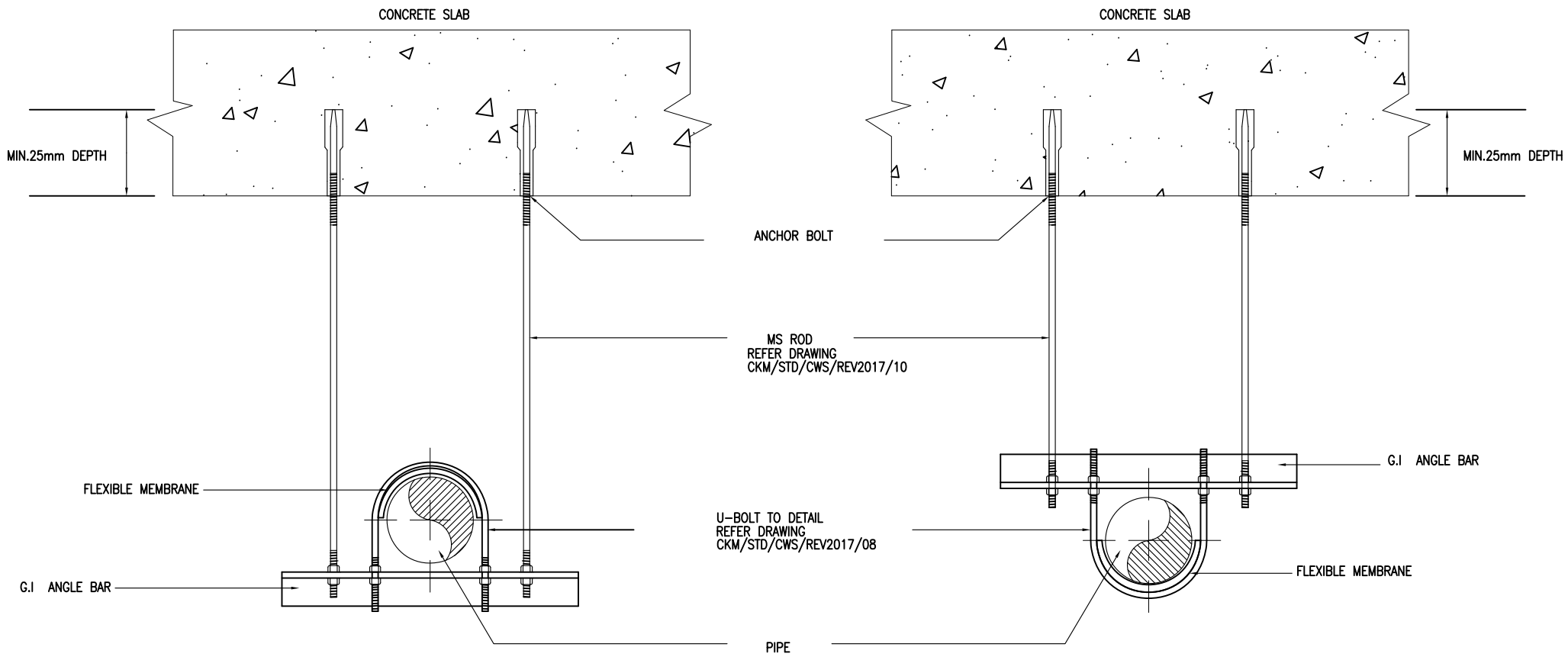

U-BOLT HANGER

SCALE : NTS

STEEL BAR (M&E PURLIN) BY MAIN CONTRACTOR

RECOMMENDED MAXIMUM SPACING OF SUPPORT FOR ALL CLASSES OF METAL & NON-METAL PIPE FOR WATER (HORIZONTAL)

PIPE SIZE (mm)	RECOMMENDED MAXIMUM SPACING OF SUPPORTS (m)	
	NON-METAL	METAL
20	0.8	1.5
25	0.85	1.8
32	1.0	2.4
40	1.1	2.4
50	1.25	2.4
80	1.65	3.0
100	1.9	3.0

(SOURCE: British Standard Institude. (2010). BS EN 806-4: Specifications installations inside buildings conveying water for human consumption. Installation)

NOTE: Water temperature should not exceed 65°C

JKR MEKANIKAL

JASA KEPADA RAKYAT

CAWANGAN KEJURUTERAAN MEKANIKAL
Ibu Pejabat JKR Malaysia

INTERNAL COLD WATER AND SANITARY PLUMBING SYSTEM

U-BOLT HANGER

DATE: 2017	SCALE: NTS

DRAWING NUMBER:

CKM/STD/CWSP/PIPE/REV2017/03

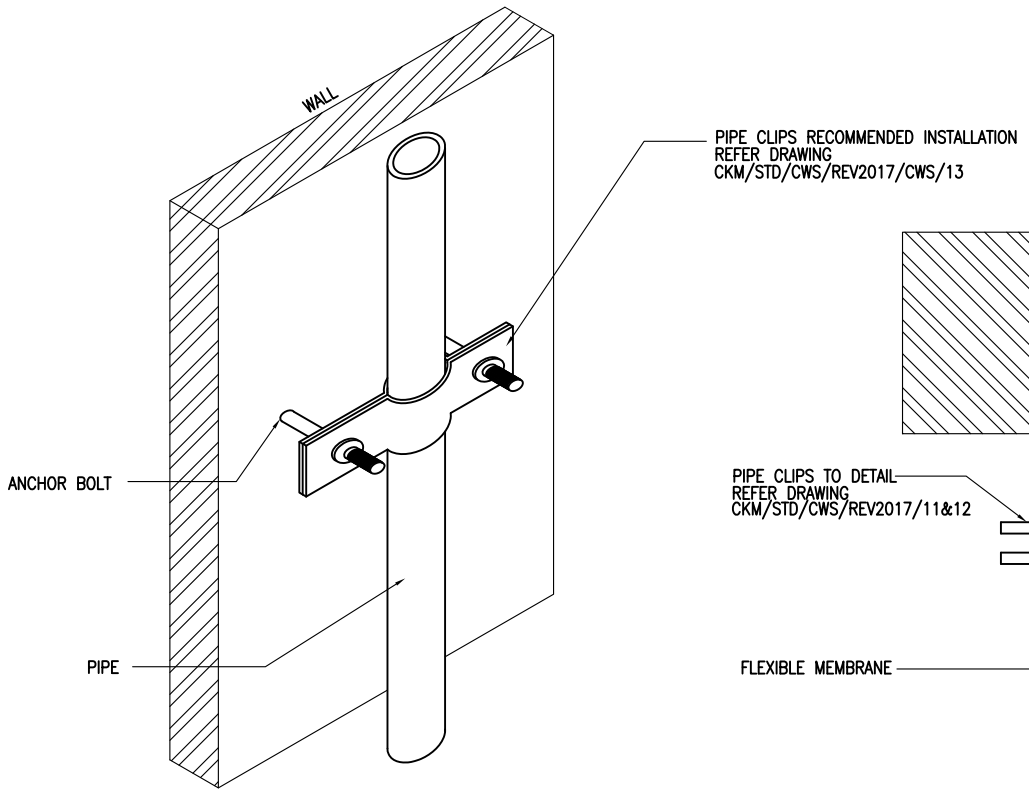

ISOMETRIC VIEW

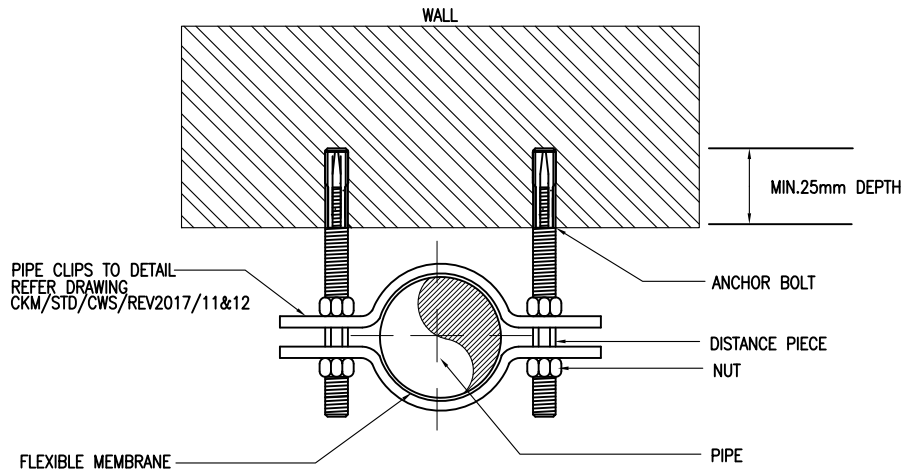

SECTION VIEW

PIPE CLIPS VERTICAL SUPPORT

SCALE : NTS

RECOMMENDED MAXIMUM SPACING OF SUPPORT FOR ALL CLASSES OF PIPE FOR WATER (VERTICAL)

PIPE SIZE (mm)	RECOMMENDED MAXIMUM SPACING OF SUPPORTS (m)	
	NON-METAL	METAL
20	1.0	2.4
25	1.1	2.4
32	1.3	3.0
40	1.3	3.0
50	1.6	3.6
80	2.1	3.6
100	2.5	3.6

(SOURCE: British Standard Institude. (2010). BS EN 806-4: Specifications installations inside buildings conveying water for human consumption. Installation)

NOTE: Water temperature should not exceed 65°C

JKR MEKANIKAL

JASA KEPADA RAKYAT

CAWANGAN KEJURUTERAAN MEKANIKAL
Ibu Pejabat JKR Malaysia

INTERNAL COLD WATER AND SANITARY PLUMBING SYSTEM

PIPE CLIPS VERTICAL SUPPORT

DATE: 2017	SCALE: NTS

DRAWING NUMBER:

CKM/STD/CWSP/PIPE/REV2017/04

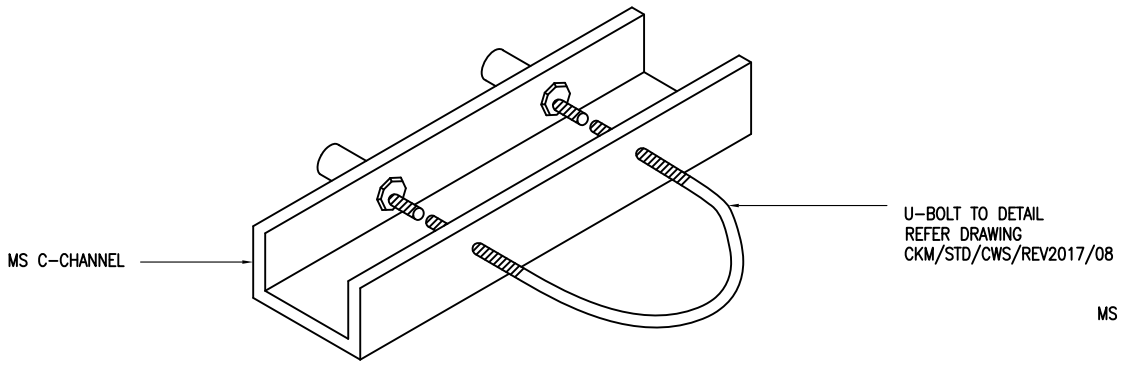

ISOMETRIC VIEW

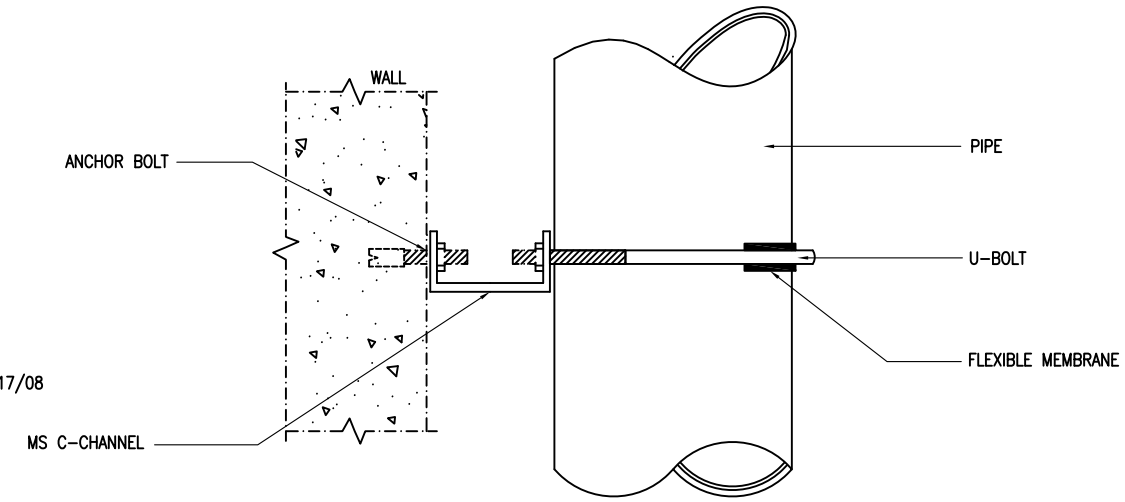

SIDE VIEW

U-BOLT VERTICAL SUPPORT

SCALE : NTS

RECOMMENDED MAXIMUM SPACING OF SUPPORT FOR ALL CLASSES OF PIPE FOR WATER (VERTICAL)

PIPE SIZE (mm)	RECOMMENDED MAXIMUM SPACING OF SUPPORTS (m)	
	NON-METAL	METAL
20	1.0	2.4
25	1.1	2.4
32	1.3	3.0
40	1.3	3.0
50	1.6	3.6
80	2.1	3.6
100	2.5	3.6

(SOURCE: British Standard Institude. (2010). BS EN 806-4: Specifications installations inside buildings conveying water for human consumption. Installation)

NOTE: Water temperature should not exceed 65°C

JKR MEKANIKAL

JASA KEPADA RAKYAT

CAWANGAN KEJURUTERAAN MEKANIKAL
Ibu Pejabat JKR Malaysia

INTERNAL COLD WATER AND SANITARY PLUMBING SYSTEM

U-BOLT VERTICAL SUPPORT

DATE:	SCALE:
2017	NTS

DRAWING NUMBER:

CKM/STD/CWSP/PIPE/REV2017/05

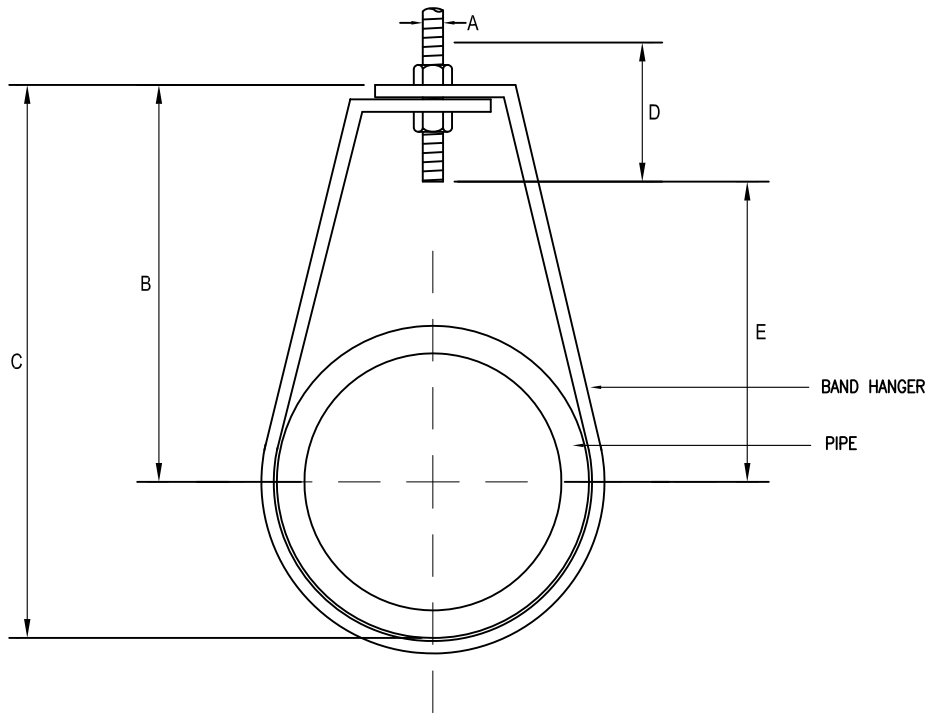

ADJUSTABLE BAND HANGER DETAILS
SCALE : NTS

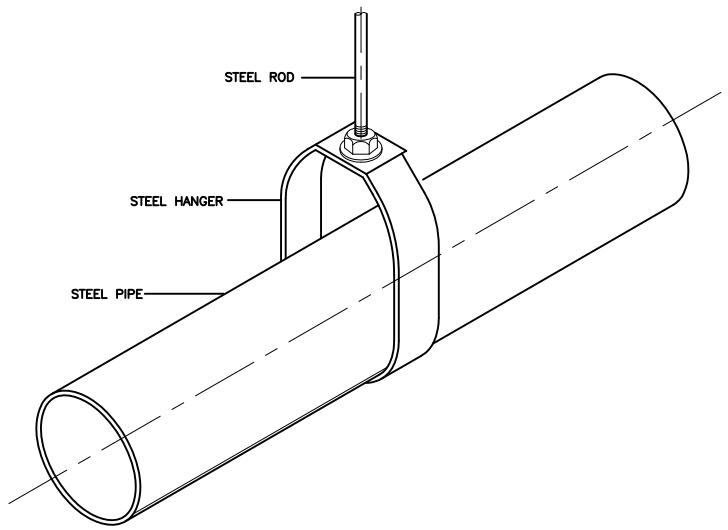

ISOMETRIC VIEW
SCALE : NTS

DIMENSIONS OF ADJUSTABLE BAND HANGER
ALL DIMENSIONS IN MM

NOM. PIPE SIZE (mm)	A	B	C	D	E	MAX. RECOMMENDED LOAD (KG)
15	10	46.0	58.7	63.5	28.6	277
20	10	52.4	66.7	63.5	33.3	277
25	10	55.6	73.0	63.5	36.5	277
32	10	65.1	87.3	63.5	46.0	277
40	10	69.9	93.7	63.5	49.2	277
50	10	76.2	106.4	63.5	55.6	277
65	13	98.4	134.9	88.9	76.2	440
80	13	108.0	152.4	88.9	84.1	440
90	13	114.3	165.1	88.9	90.5	440
100	16	123.8	181.0	101.6	96.8	567

(SOURCE: MSS SP-58:2002)

JKR MEKANIKAL

JASA KEPADA RAKYAT

CAWANGAN KEJURUTERAAN MEKANIKAL
Ibu Pejabat JKR Malaysia

INTERNAL COLD WATER AND SANITARY PLUMBING SYSTEM

ADJUSTABLE BAND HANGER DETAILS

DATE:	SCALE:
2017	NTS

DRAWING NUMBER:
CKM/STD/CWSP/PIPE/REV2017/06

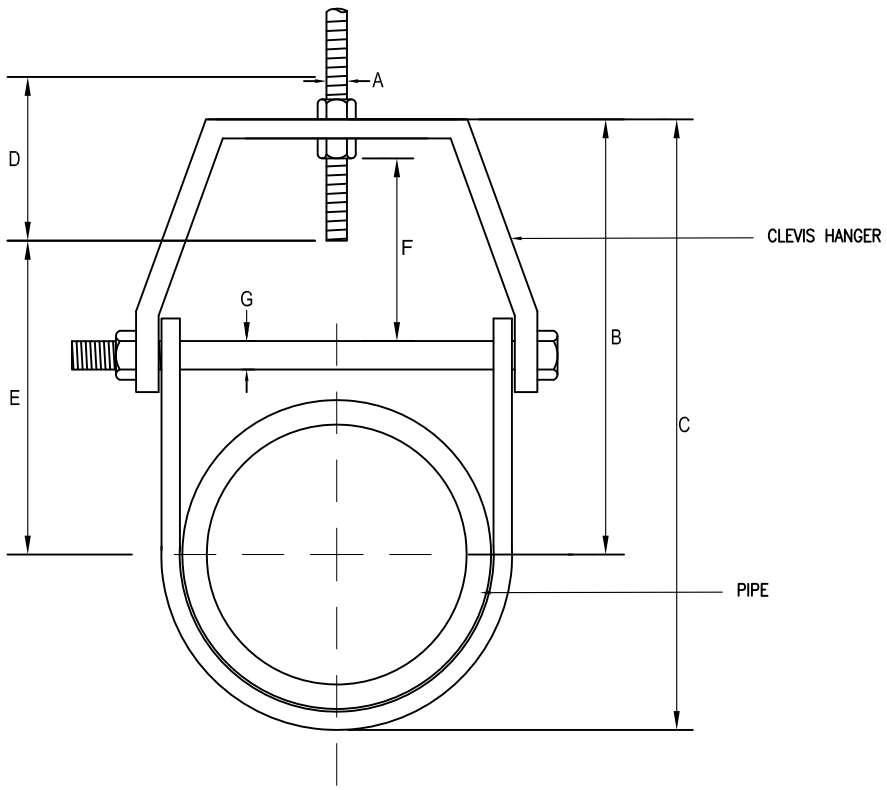

ADJUSTABLE CLEVIS HANGER DETAILS
SCALE : NTS

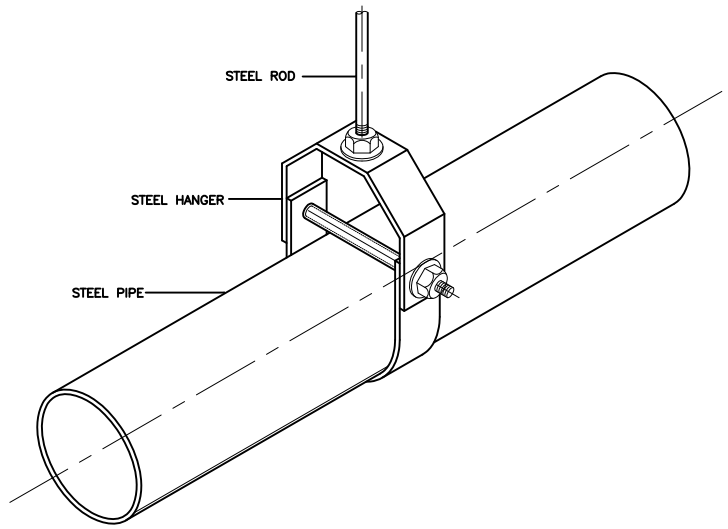

ISOMETRIC VIEW
SCALE : NTS

DIMENSIONS OF ADJUSTABLE CLEVIS HANGER
ALL DIMENSIONS IN MM

NOM. PIPE SIZE (mm)	A	B	C	D	E	F	G	MAX. RECOMMENDED LOAD (KG)
15	10	42.9	54.0	63.5	22.2	11.1	6.4	331
20	10	47.6	61.9	63.5	25.4	12.7	6.4	331
25	10	54.0	71.4	63.5	31.8	15.9	6.4	331
32	10	65.1	87.3	63.5	44.5	22.2	6.4	331
40	10	76.2	101.6	63.5	54.0	27.0	6.4	331
50	10	93.7	123.8	63.5	74.6	41.3	6.4	331
65	13	119.1	155.6	76.2	96.8	50.8	9.5	612
80	13	120.7	166.7	76.2	98.4	44.5	9.5	612
90	13	125.4	176.2	76.2	103.2	44.5	9.5	612
100	16	141.3	198.4	88.9	114.3	49.2	9.5	649

(SOURCE: MSS SP-58:2002)

JKR MEKANIKAL

JASA KEPADA RAKYAT

CAWANGAN KEJURUTERAAN MEKANIKAL
Ibu Pejabat JKR Malaysia

INTERNAL COLD WATER AND SANITARY PLUMBING SYSTEM

ADJUSTABLE CLEVIS HANGER DETAILS

DATE:	SCALE:
2017	NTS

DRAWING NUMBER:

CKM/STD/CWSP/PIPE/REV2017/07

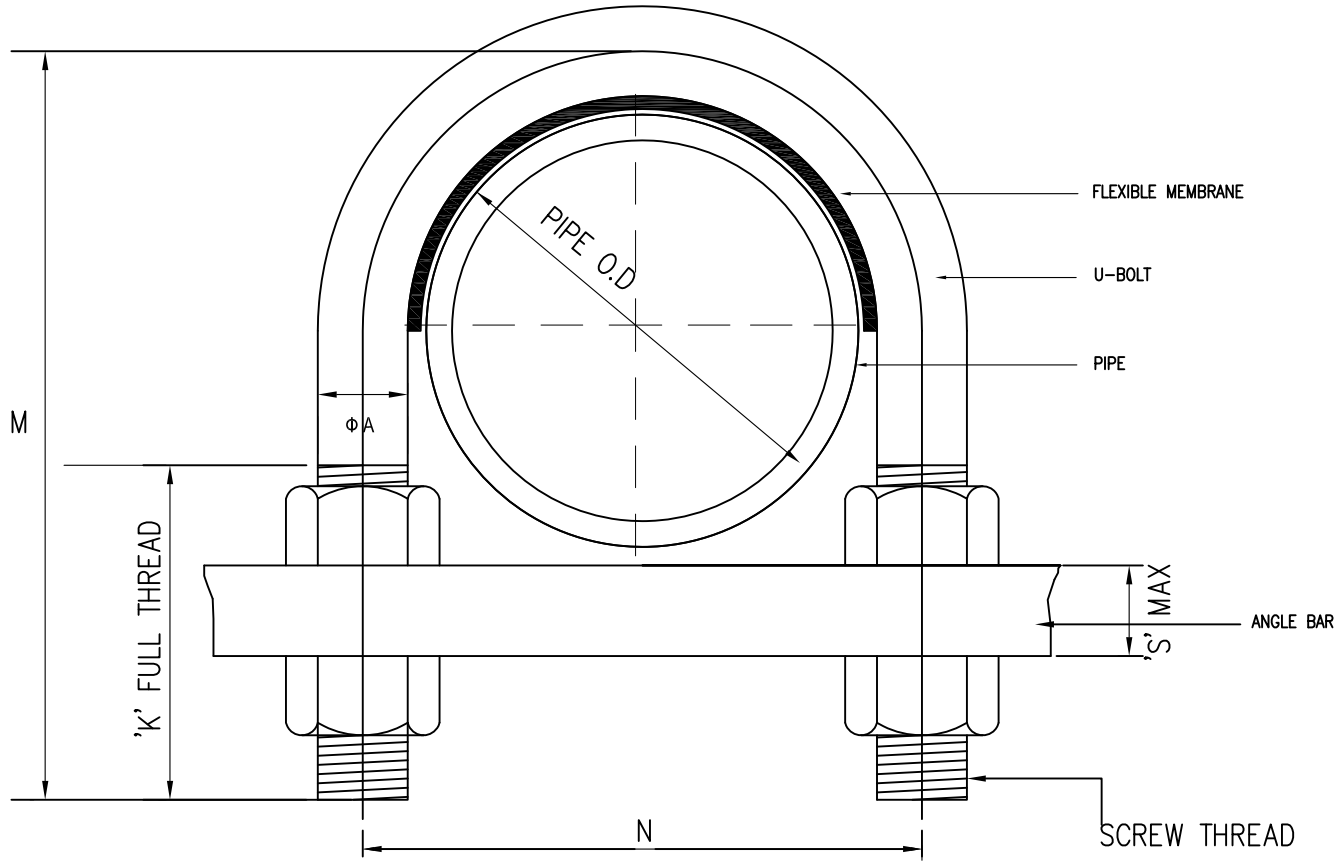

NOTE: Where used on taper flanges of steelwork taper washers are to be provided

U-BOLT (NOT TO GRIP PIPE) DETAILS

SCALE : NTS

DIMENSIONS OF U-BOLTS (NOT TO GRIP TYPE)
ALL DIMENSIONS IN MM

NOM. PIPE SIZE (mm)	A	N	M	K	S MAX
15	8	40	45	25	10
20	8	45	55	30	10
25	8	50	60	30	10
32	8	60	70	30	10
40	10	65	85	40	16
50	10	80	100	40	16
65	12	95	120	50	19
80	16	110	140	55	19
100	16	140	165	55	19
125	16	165	190	55	19
150	20	195	225	65	19
175	20	220	250	65	19
200	20	250	275	65	19

*THESE U-BOLTS ARE IDENTICAL WITH THE EQUIVALENT SIZES FOR STEEL PIPE (BS 3974 PART 1:1974)

JKR MEKANIKAL

JASA KEPADA RAKYAT

CAWANGAN KEJURUTERAAN MEKANIKAL
Ibu Pejabat JKR Malaysia

INTERNAL COLD WATER AND SANITARY PLUMBING SYSTEM

U-BOLT (NOT TO GRIP PIPE) DETAILS

DATE: 2017

SCALE: NTS

DRAWING NUMBER:

CKM/STD/CWSP/PIPE/REV2017/08

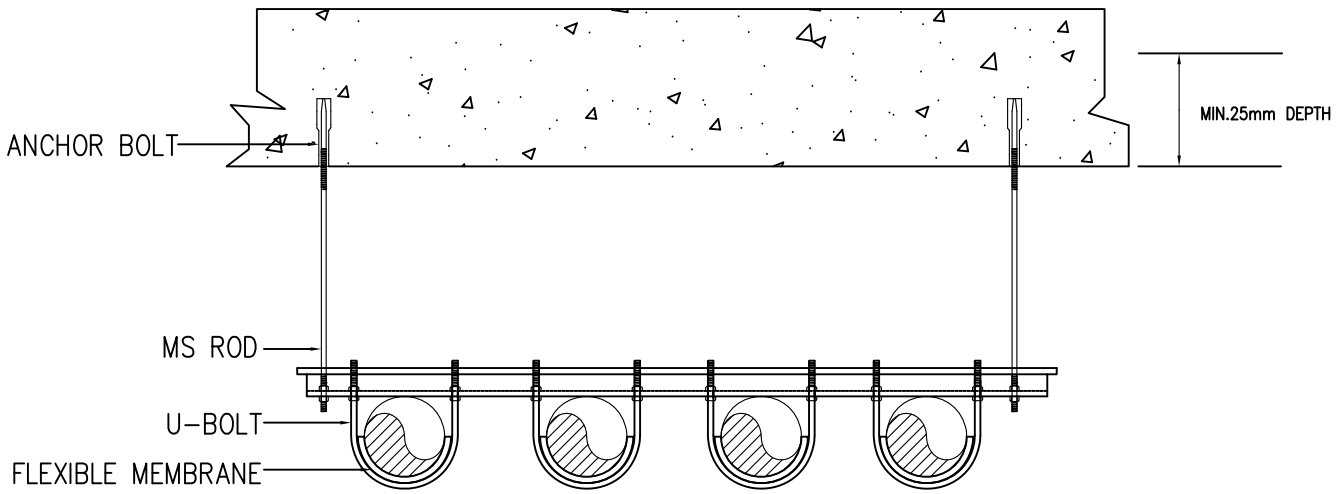

OPTION 1

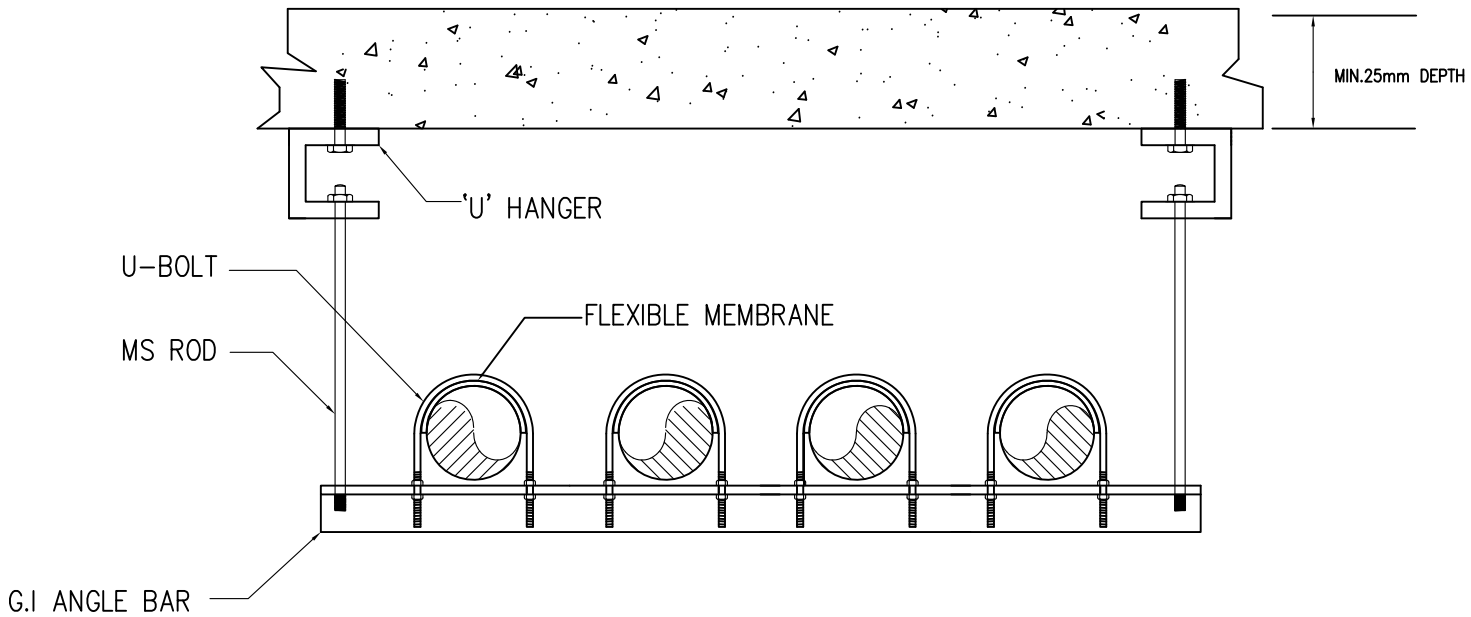

OPTION 2

TYPICAL HORIZONTAL PIPE ARRANGEMENT USING U-BOLT HANGER

SCALE : NTS

NOTE:

1. Material for U-bolt, angle bar and U-hanger shall be of Galvanized Iron (G.I) or S.O approval.

JKR MEKANIKAL

JASA KEPADA RAKYAT

CAWANGAN KEJURUTERAAN MEKANIKAL
Ibu Pejabat JKR Malaysia

INTERNAL COLD WATER AND SANITARY PLUMBING SYSTEM

TYPICAL HORIZONTAL PIPE ARRANGEMENT USING U-BOLT HANGER

DATE:	SCALE:
2017	NTS

DRAWING NUMBER:

CKM/STD/CWSP/PIPE/REV2017/09

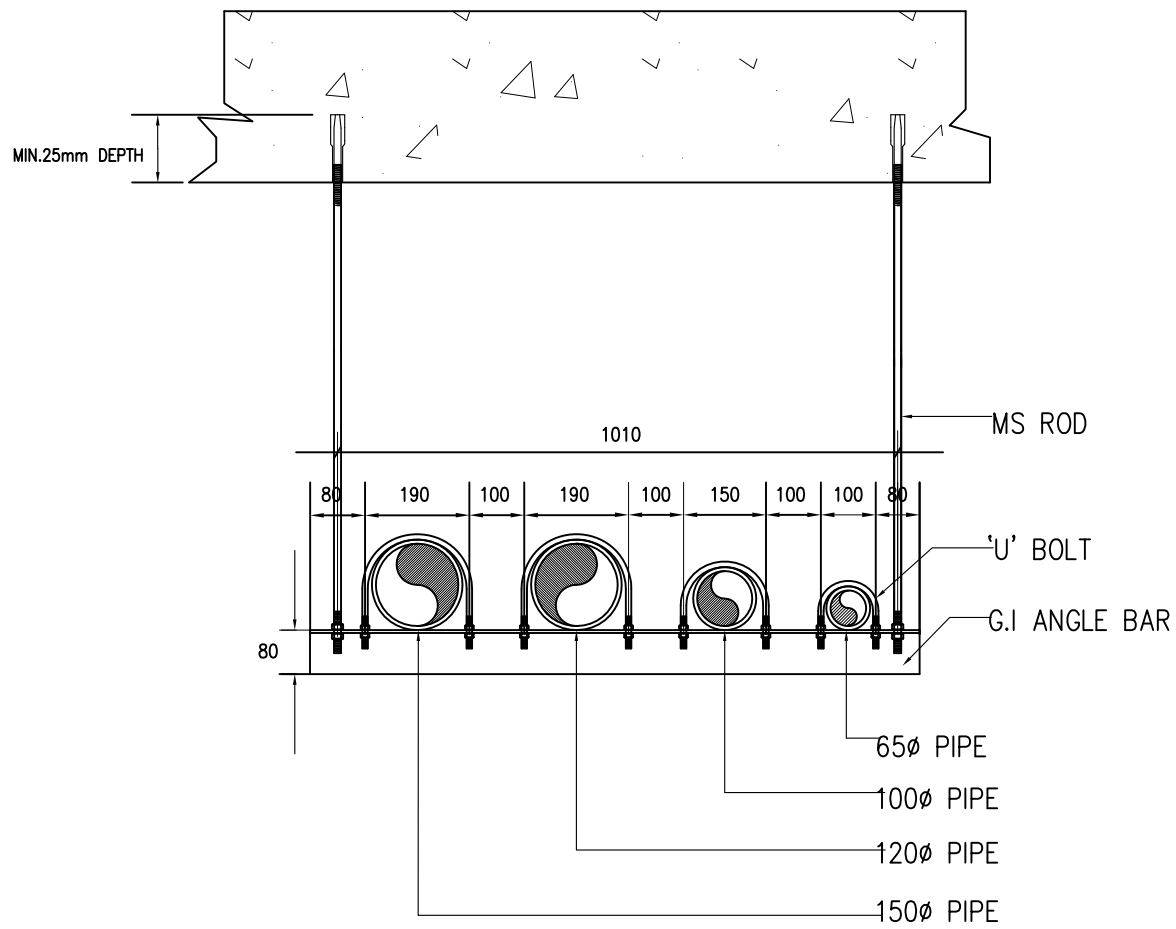

Note : Dimension in mm

SPACING BETWEEN VARIOUS SIZE OF PIPE USING U-BOLT HANGER

SCALE : NTS

MAXIMUM RECOMMENDED LOAD FOR VARIOUS MS ROD SIZE ALL DIMENSIONS IN MM

MS ROD SIZE (mm)	ROOT AREA OF THREAD (mm^2)	MAX. SAFE LOAD AT ROD TEMP. OF 650 F (343 C) (kN)
M10	49.49	3.66
M12	72.40	5.35
M16	138.3	10.2
M20	217.1	16.0
M24	312.8	23.1
M30	503.0	37.2
M36	738.0	54.5
M42	1018	75.2

(SOURCE: MSS SP-58:2009)

NOTE: a) Tabulated loads are based on a minimum actual tensile stress of 345MPa divided by a safety factor of 3.5, reduced by 25% resulting in an allowable stress of 73.9MPa. (The 25% reduction is to allow for normal installation and service conditions.)

b) Rod sizes are based on min. root diameters for standard coarse thread class 6g. Taken from ASME B1.13M for metric thread forms.

NOTE:

1. Material for U-bolt, angle bar and U-hanger shall be of Galvanized Iron (G.I) or S.O approval.

JKR MEKANIKAL

JASA KEPADA RAKYAT

CAWANGAN KEJURUTERAAN MEKANIKAL
Ibu Pejabat JKR Malaysia

INTERNAL COLD WATER AND SANITARY PLUMBING SYSTEM

SPACING BETWEEN VARIOUS SIZE OF PIPE USING U-BOLT HANGER

DATE: 2017	SCALE: NTS

DRAWING NUMBER:

CKM/STD/CWSP/PIPE/REV2017/10

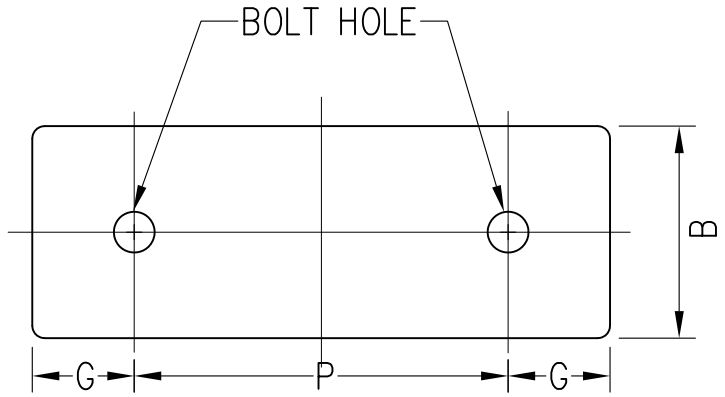

FRONT VIEW

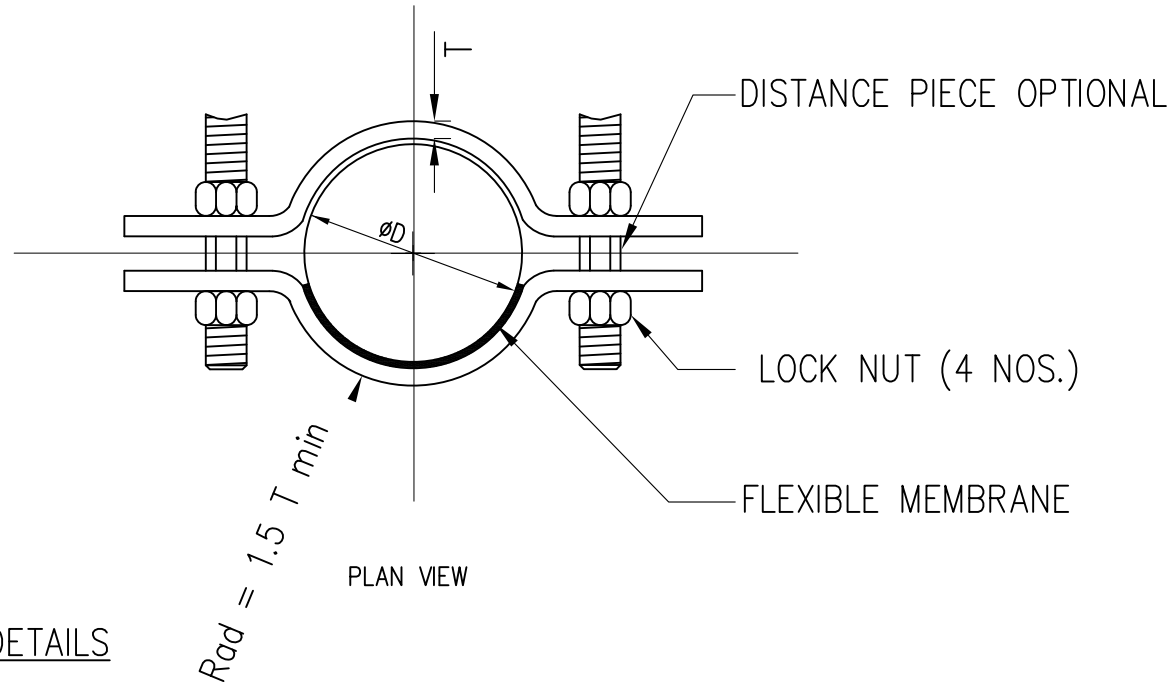

PLAN VIEW

PIPE CLIPS SUPPORT DETAILS

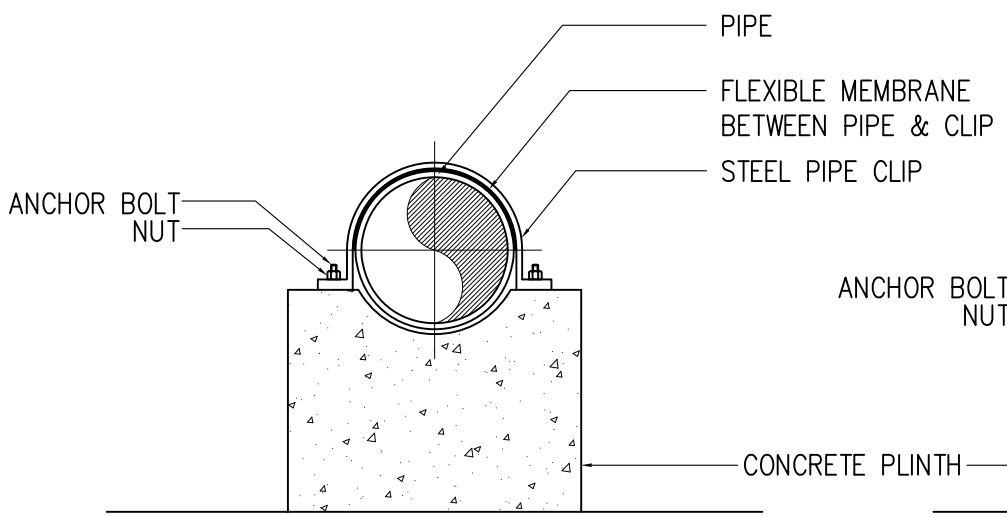

OPTION 1

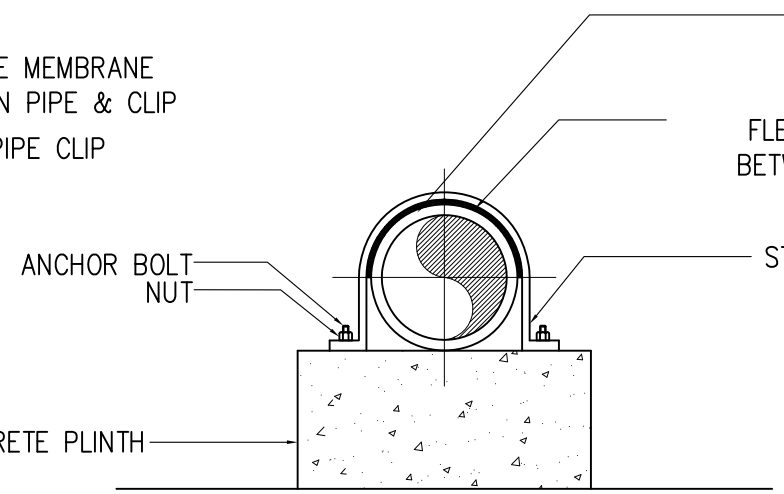

OPTION 2

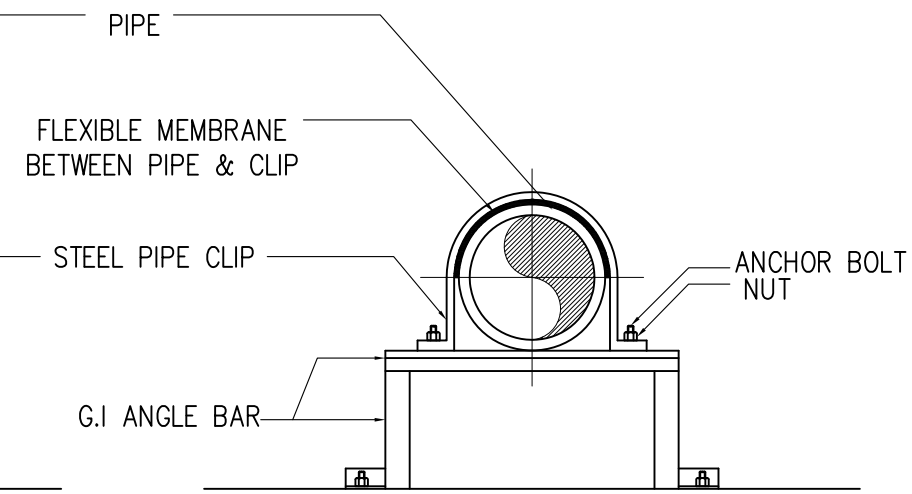

OPTION 3

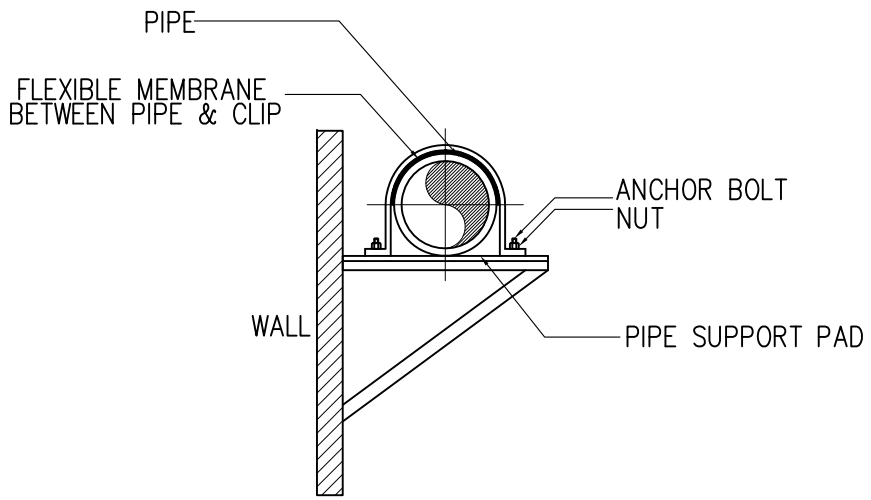

OPTION 4

SCALE : NTS

RECOMMENDED INSTALLATION FOR HORIZONTAL PIPE CLIPS SUPPORT

SCALE : NTS

JKR MEKANIKAL

JASA KEPADA RAKYAT

BAHAGIAN PEMBANGUNAN KEPAKARAN
CAWANGAN KEJURUTERAAN MEKANIKAL
Ibu Pejabat JKR Malaysia

INTERNAL COLD WATER AND SANITARY PLUMBING SYSTEM

PIPE CLIPS SUPPORT DETAILS

DATE:	SCALE:
2017	NTS

DRAWING NUMBER:

CKM/STD/CWSP/PIPE/REV2017/11

DIMENSIONS OF PIPE CLIPS

(ALL DIMENSIONS IN MM)

PIPE SIZE		Light Series							Heavy Series						
Nom. size	Outside dia.	D dia.	Clip dimensions B x T	P	Bolts Size		G min.	Safe working load	D dia.	Clip dimensions B x T	P	Bolts Size		G min.	Safe working load
					Metric Size	Hole dia.						Metric Size	Hole dia.		
mm	mm	mm	mm	mm		mm	mm	kgf	mm	mm	mm		mm	mm	kgf
15	21.3	USE HEAVY SERIES							23	35 x 5	65	M 12	12	15	280
20	26.9								28	35 x 5	70	M 12	12	15	280
25	33.7								36	35 x 5	75	M 12	15	15	280
32	42.4								44	35 x 5	90	M 12	15	18	280
40	48.3								50	35 x 5	95	M 12	15	18	280
50	60.3								62	35 x 5	105	M 12	15	18	280
65	76.1	80	35 x 5	125	M 12	15	18	165	80	35 x 5	155	M 16	19	24	450
80	88.9	92	35 x 5	135	M 12	15	18	165	92	35 x 5	165	M 16	19	24	450
100	114.3	118	35 x 5	170	M 12	15	18	165	118	35 x 5	190	M 16	19	24	450
125	139.7	144	35 x 5	195	M 16	19	24	280	144	35 x 5	215	M 16	19	24	450
150	168.3	172	35 x 5	225	M 16	19	24	280	172	35 x 5	245	M 16	19	24	450
175	193.7	198	35 x 8	270	M 16	19	24	450	198	45 x 10	280	M 16	19	24	900
200	219.1	224	35 x 8	295	M 16	19	24	450	224	45 x 10	305	M 16	19	24	900

(BS 3974 PART 1:1974)

NOTE:

1. The mortar thrust block are not recommended to be used as the support of the ABS pipeline exposed to sunlight.

JKR MEKANIKAL

JASA KEPADA RAKYAT

CAWANGAN KEJURUTERAAN MEKANIKAL
Ibu Pejabat JKR Malaysia

INTERNAL COLD WATER AND SANITARY PLUMBING SYSTEM

RECOMMENDED INSTALLATION FOR HORIZONTAL PIPE CLIPS SUPPORT

DATE: 2017

SCALE: NTS

DRAWING NUMBER:

CKM/STD/CWSP/PIPE/REV2017/12

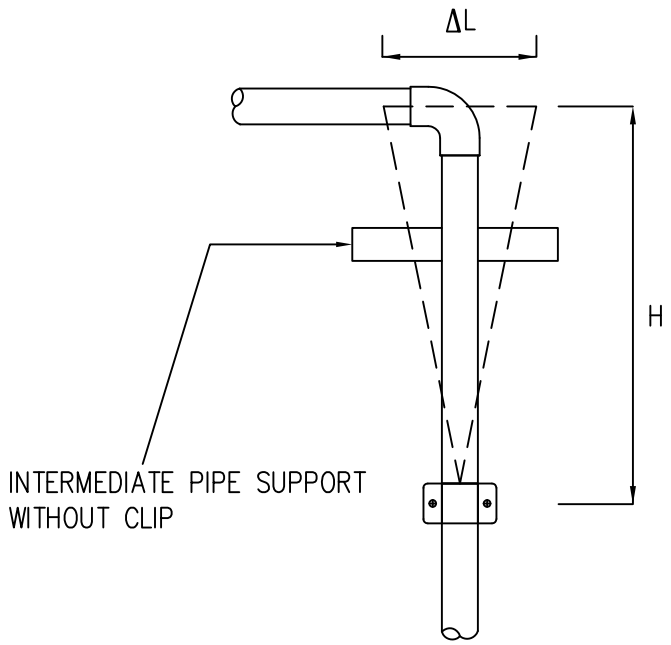

EXPANSION ARM

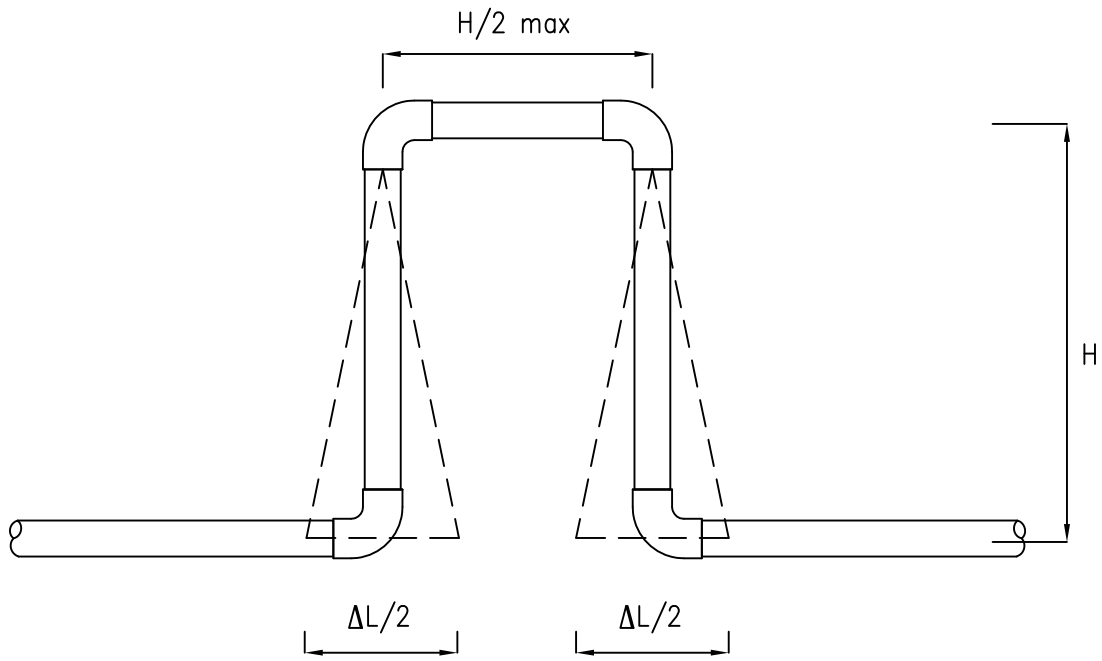

EXPANSION LOOP

GUIDE FOR ABS PIPE THERMAL EXPANSION CALCULATION

1.) CALCULATE PIPE EXPANSION (ΔL)

$$\Delta L = L \times C \times \Delta T$$

where :

ΔL= pipe expansion/contraction,(m)
L= original pipe length,(m)
C= linear coefficient of thermal expansion, as per manufacturer recommendation (m/m°C)
ΔT= pipe wall temperature variation,(°C)

The variation in pipe wall temperature can be calculated as:

$$\Delta T = 0.65\ \Delta T_L + 0.10\,\Delta T_A$$

where :

ΔT = pipe wall temperature variation(°C)
ΔT_L = maximum temperature variation in pipe content,(°C)
ΔT_A = maximum temperature variation of external air,(°C)

The temperature variation used should considered both pipe operating and shut down conditions

2.) CALCULATE LOOP LEG LENGTH (H)

$$H = K \times \sqrt{OD \times \Delta L}$$

where

K = constant as per manufacturer recommendation
OD = Outside diameter of pipe (mm)
ΔL = Linear expansion (mm)

DETAIL OF ABS PIPE THERMAL EXPANSION
SCALE : NTS

NOTE:

1. All pipe clips should permit free axial pipe movement at all temperatures and should give good bearing support to the pipe.

JKR MEKANIKAL
JASA KEPADA RAKYAT

CAWANGAN KEJURUTERAAN MEKANIKAL
Ibu Pejabat JKR Malaysia

INTERNAL COLD WATER AND SANITARY PLUMBING SYSTEM

DETAIL OF ABS PIPE THERMAL EXPANSION

DATE:	SCALE:
2017	NTS

DRAWING NUMBER:
CKM/STD/CWSP/PIPE/REV2017/13

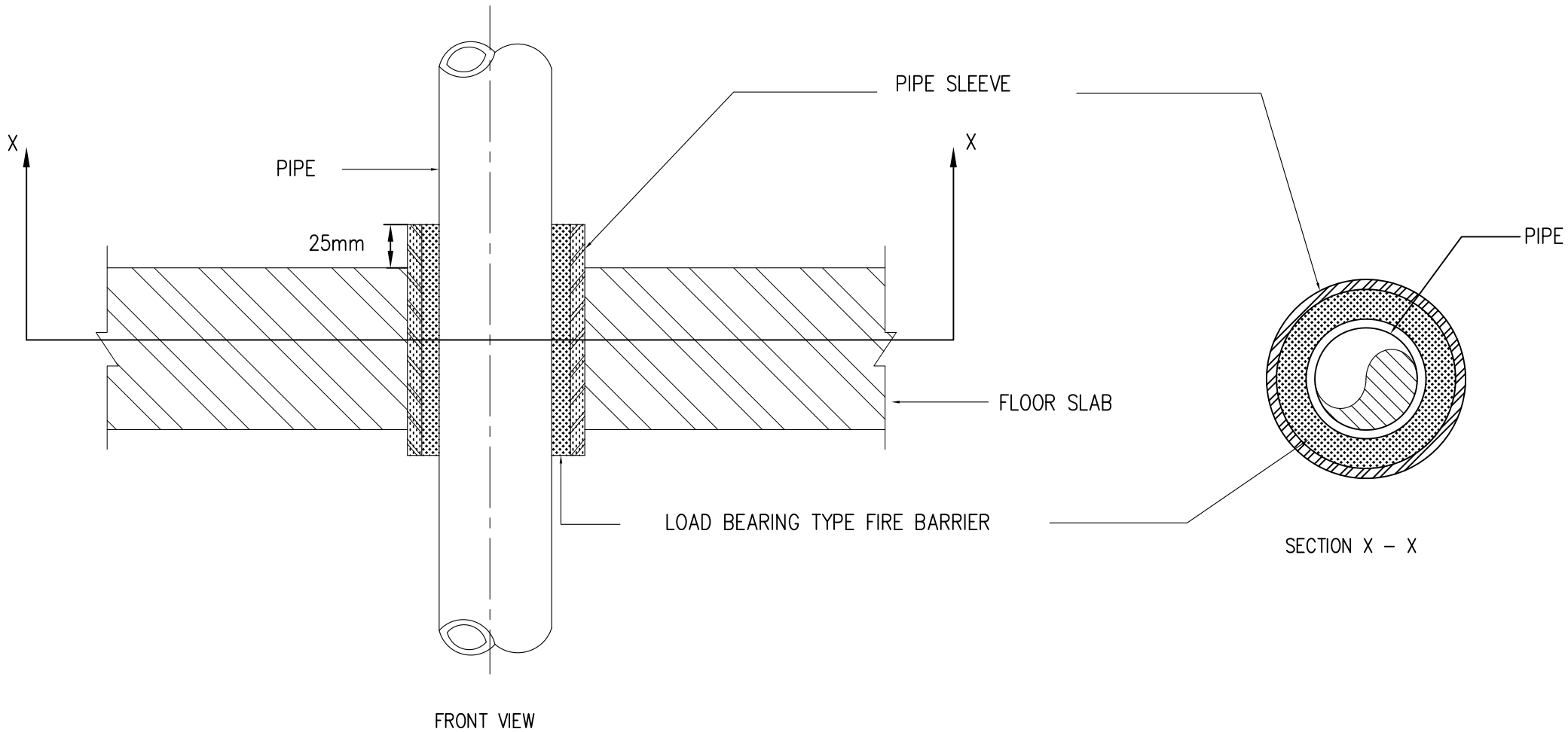

DETAIL OF PIPE SLEEVE THROUGH FLOOR / SLAB

SCALE : NTS

NOTES : SLEEVE SHALL BE SAME MATERIAL OF PIPE

JKR MEKANIKAL

JASA KEPADA RAKYAT

CAWANGAN KEJURUTERAAN MEKANIKAL
Ibu Pejabat JKR Malaysia

INTERNAL COLD WATER AND SANITARY PLUMBING SYSTEM

DETAIL OF PIPE SLEEVE THROUGH FLOOR / SLAB

DATE:	SCALE:
2017	NTS

DRAWING NUMBER:

CKM/STD/CWSP/PIPE/REV2017/14

RECOMMENDED PIPE SLEEVE MATERIAL

PIPE MATERIAL	PIPE SLEEVE MATERIAL
METAL	GALVANIZED IRON
NON-METAL	UPVC (HEAVY DUTY)

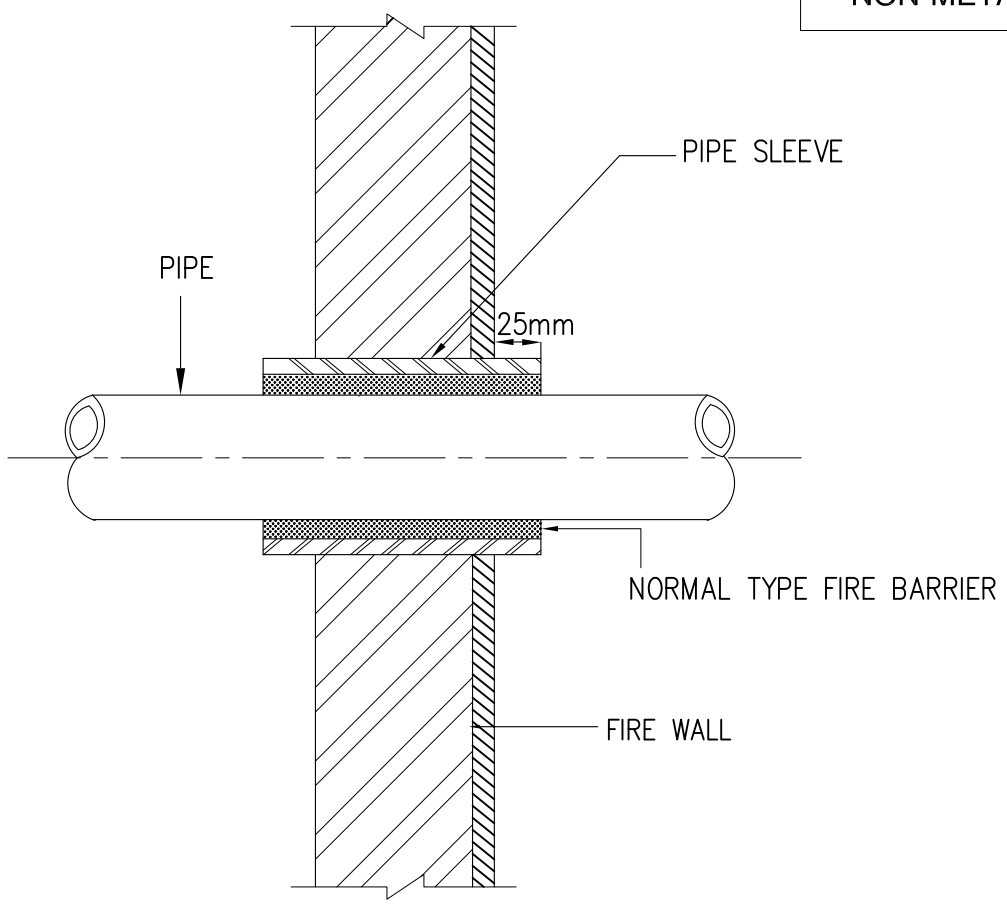

PIPE SLEEVE FOR PIPE THROUGH FIRE WALL

SCALE : NTS

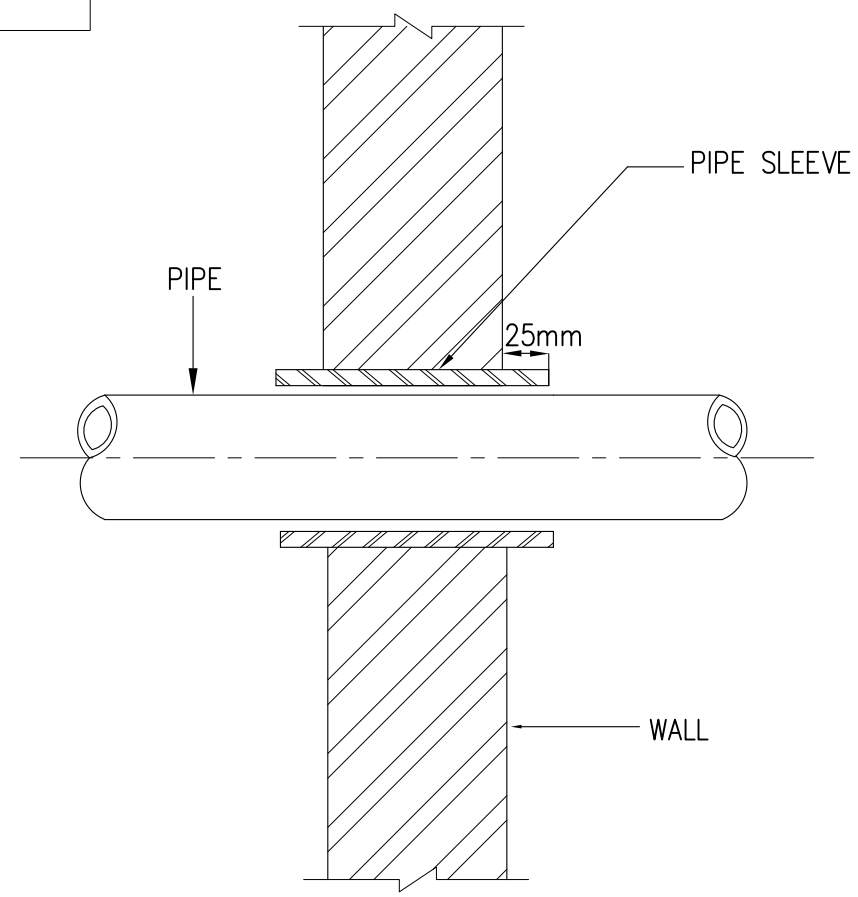

PIPE SLEEVE FOR PIPE THROUGH WALL

SCALE : NTS

JASA KEPADA RAKYAT

CAWANGAN KEJURUTERAAN MEKANIKAL
Ibu Pejabat JKR Malaysia

INTERNAL COLD WATER AND SANITARY PLUMBING SYSTEM

DETAIL OF PIPE SLEEVE THROUGH WALL

DATE:	SCALE:
2017	NTS

DRAWING NUMBER:

CKM/STD/CWSP/PIPE/REV2017/15

INTERNAL COLD WATER PLUMBING SYSTEM

JKR
MEKANIKAL

JASA KEPADA RAKYAT

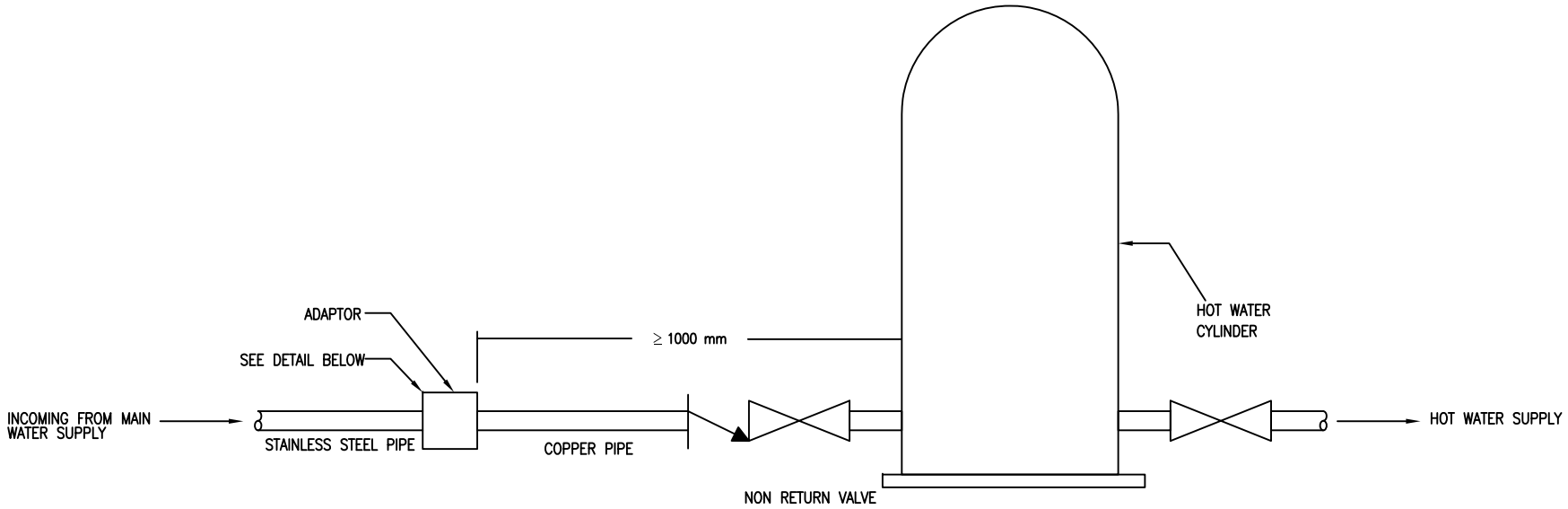

STAINLESS STEEL PIPING SHALL BE AT LEAST 1000mm FROM A HOT WATER CYLINDER

RECOMMENDED INSTALLATION METHOD OF INCOMING STAINLESS STEEL PIPE FOR HOT WATER CYLINDER

SCALE : NTS

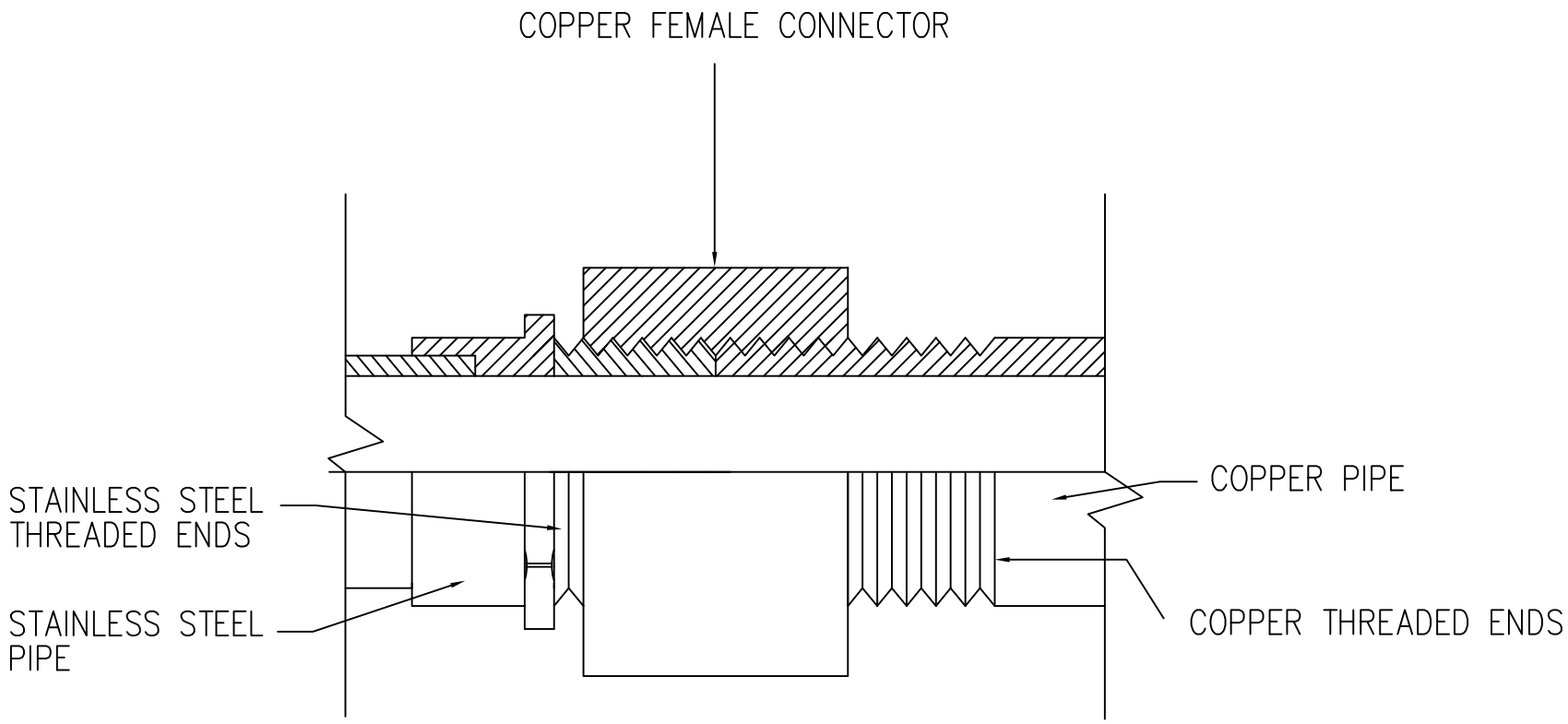

ADAPTOR : MALE & FEMALE CONNECTOR (CAPILLARY JOINT WITH A THREADED END)

SCALE : NTS

JASA KEPADA RAKYAT

CAWANGAN KEJURUTERAAN MEKANIKAL
Ibu Pejabat JKR Malaysia

INTERNAL COLD WATER PLUMBING SYSTEM

RECOMMENDED INSTALLATION METHOD OF INCOMING STAINLESS STEEL PIPE FOR HOT WATER CYLINDER

DATE	SCALE
2017	N.T.S

DRAWING NUMBER:

CKM/STD/CWSP/CW/REV2017/01

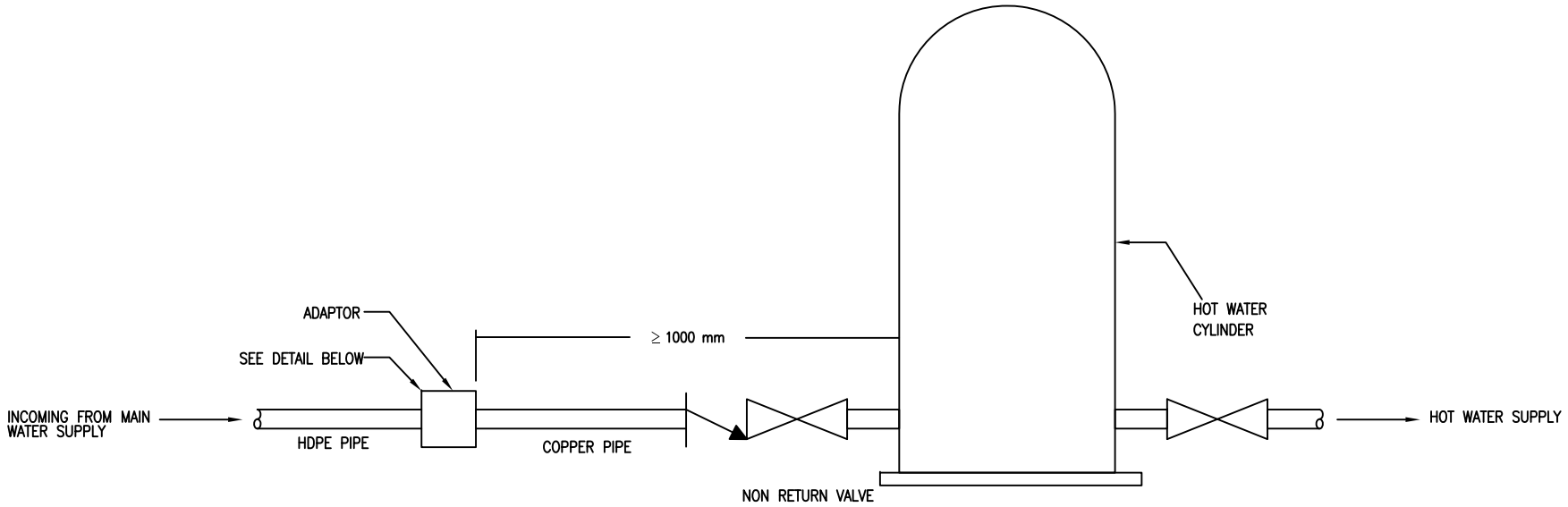

HDPE PIPING SHALL BE AT LEAST 1000mm FROM A HOT WATER CYLINDER

RECOMMENDED INSTALLATION METHOD OF INCOMING HDPE PIPE FOR HOT WATER CYLINDER

SCALE : NTS

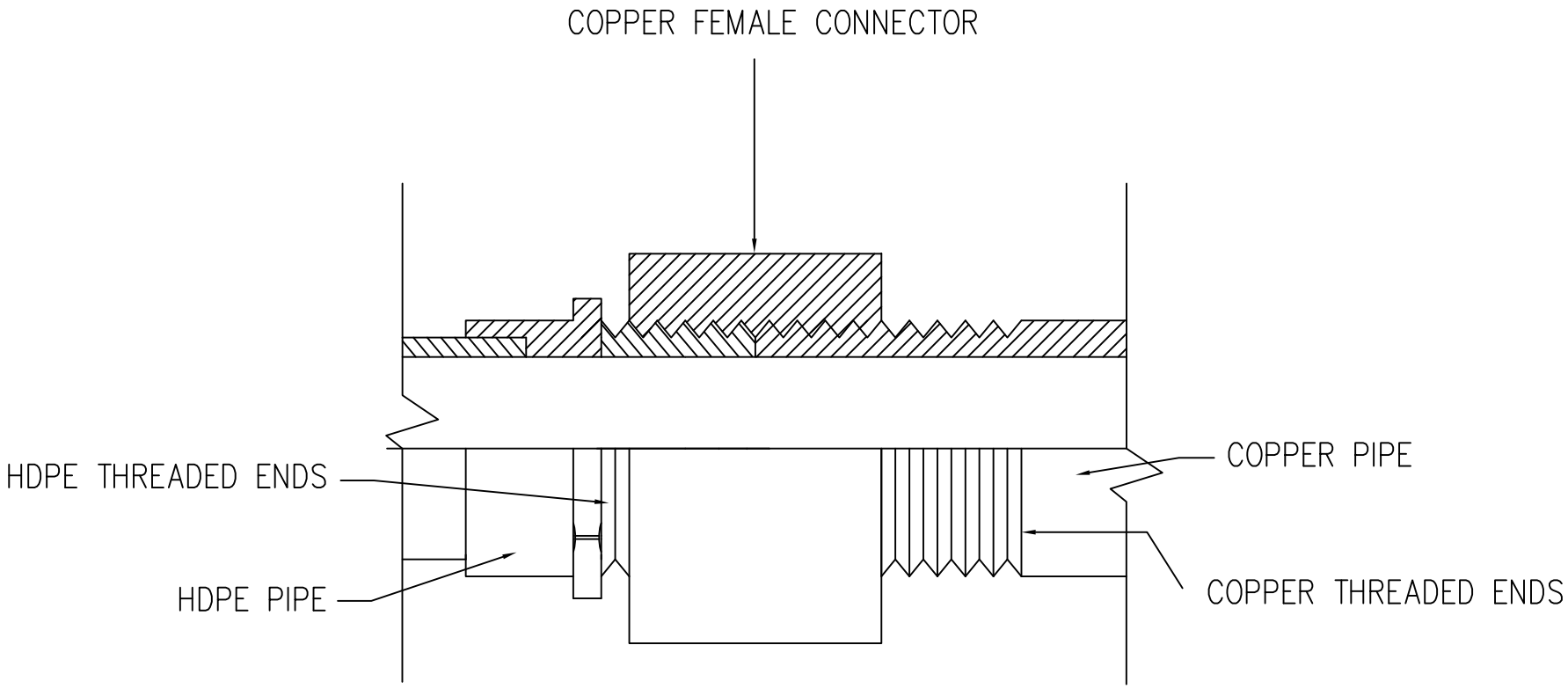

ADAPTOR : MALE & FEMALE CONNECTOR (CAPILLARY JOINT WITH A THREADED END)

SCALE : NTS

JASA KEPADA RAKYAT

CAWANGAN KEJURUTERAAN MEKANIKAL
Ibu Pejabat JKR Malaysia

INTERNAL COLD WATER PLUMBING SYSTEM

RECOMMENDED INSTALLATION METHOD OF INCOMING HDPE PIPE FOR HOT WATER CYLINDER

DATE	SCALE
2017	N.T.S

DRAWING NUMBER:

CKM/STD/CWSP/CW/REV2017/02

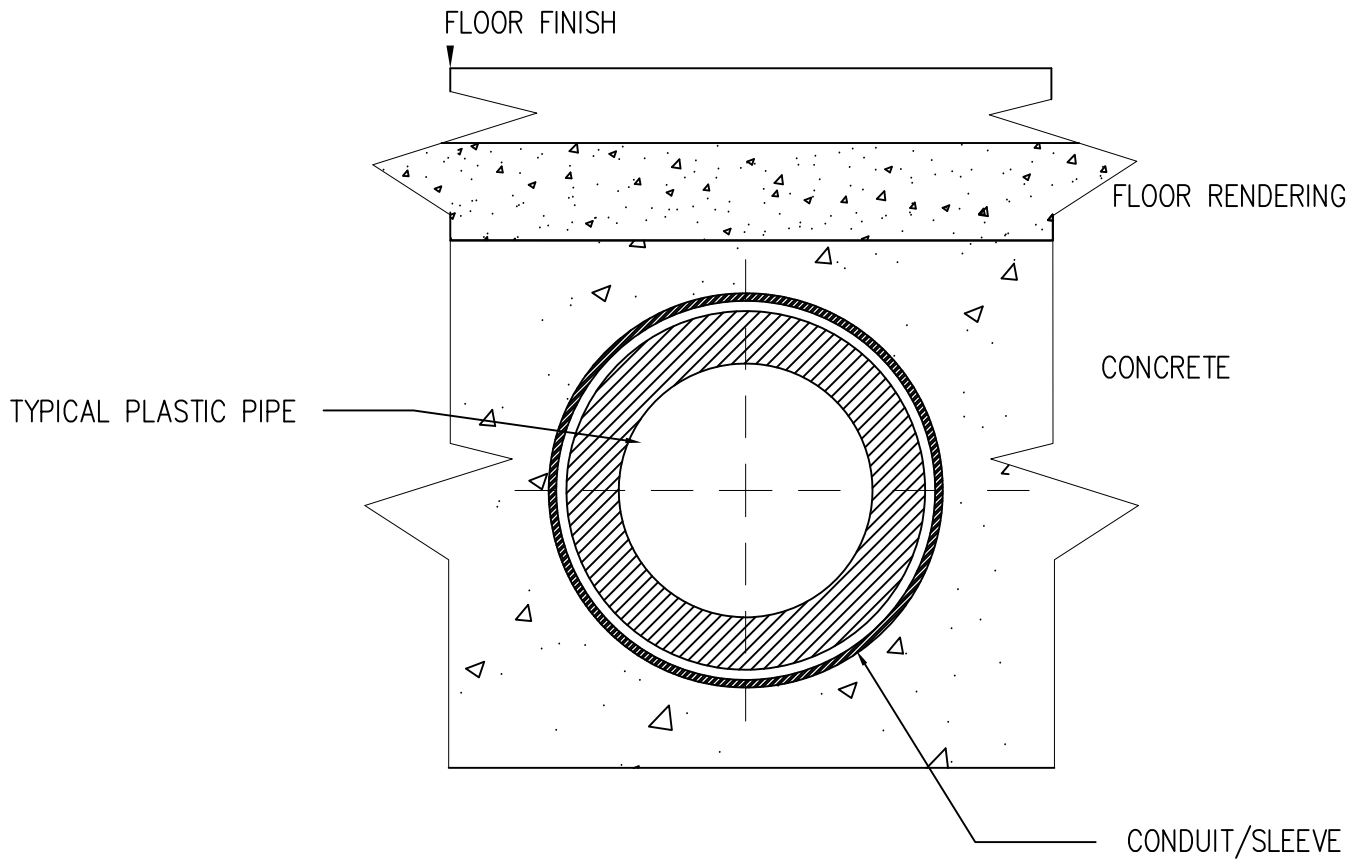

OPTION

TYPICAL INSTALLATION OF PLASTIC PIPE (ABS/HDPE/PPE/PVC/PPR PIPE) LAY IN CONCRETE

SCALE : NTS

NOTE:

1. Avoid scoring and scratching pipes when installed in concrete (SOURCE: MS 1419, PART 4:2007)

JKR MEKANIKAL

JASA KEPADA RAKYAT

CAWANGAN KEJURUTERAAN MEKANIKAL
Ibu Pejabat JKR Malaysia

INTERNAL COLD WATER PLUMBING SYSTEM

TYPICAL INSTALLATION OF PLASTIC PIPE LAY IN CONCRETE

DATE	SCALE
2017	N.T.S

DRAWING NUMBER:

CKM/STD/CWSP/CW/REV2017/03

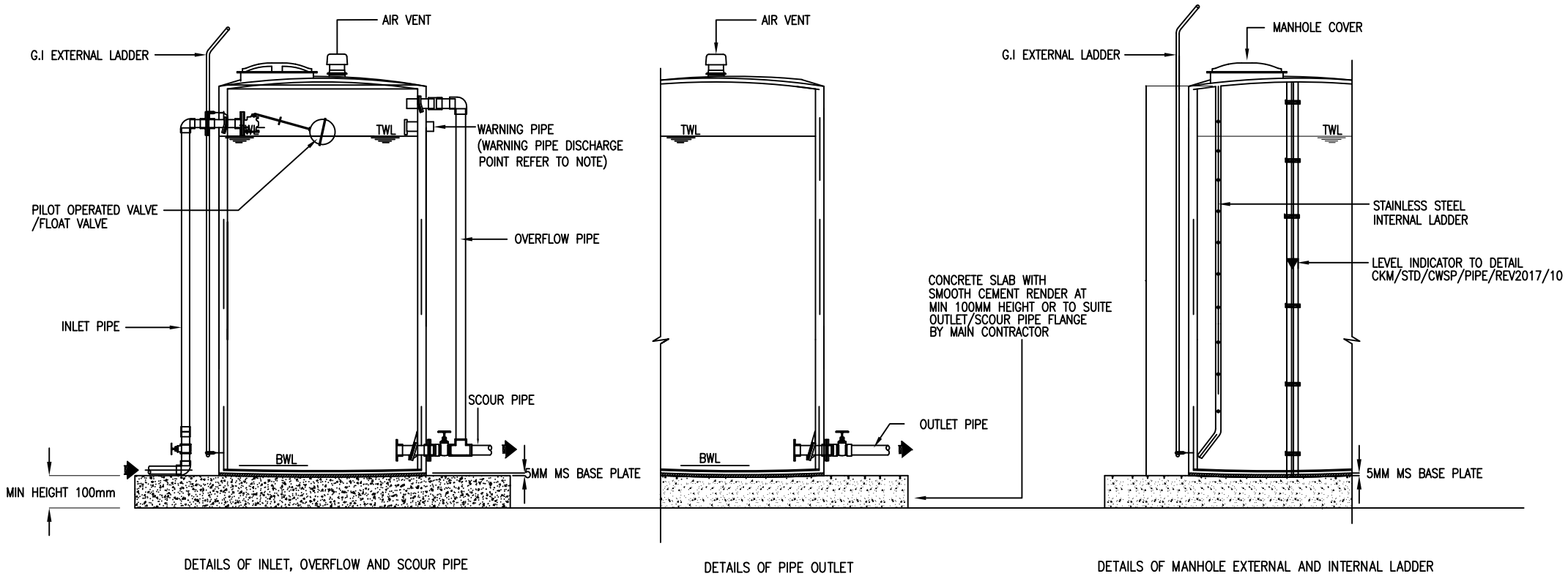

DETAILS OF HIGH DENSITY POLYETHYLENE (HDPE) TANK INSTALLATION

SCALE : NTS

(SOURCE: MS 1225, PART 1:2004)

NOTE:

1. HDPE Tank which is manufactured should comply to MS 1225
2. Warning pipe shall discharge in a conspicious position preferably outside the building where this is appropriate.
3. For pipe support refer to CKM/STD/CWSP/PIPE/REV2017/12
4. Warning pipe/overflow pipe/scour pipe shall be discharge to the nearest drain.
5. Size for overflow pipe & scour pipe shall be size bigger than inlet pipe.
6. Overflow and warning pipe shall be combined for tank capacity less than 4,500 liters (1,000 gallons).
7. Tank with > 2 metres depth shall be provided with internal and external ladder.

LEGEND:

TWL TOP WATER LEVEL

BWL BOTTOM WATER LEVEL

MS MILD STEEL

G.I GALVANIZED IRON

JKR MEKANIKAL

JASA KEPADA RAKYAT

CAWANGAN KEJURUTERAAN MEKANIKAL
Ibu Pejabat JKR Malaysia

INTERNAL COLD WATER PLUMBING SYSTEM

DETAILS OF HDPE TANK INSTALLATION

DATE	SCALE
2017	N.T.S

DRAWING NUMBER:

CKM/STD/CWSP/CW/REV2017/04

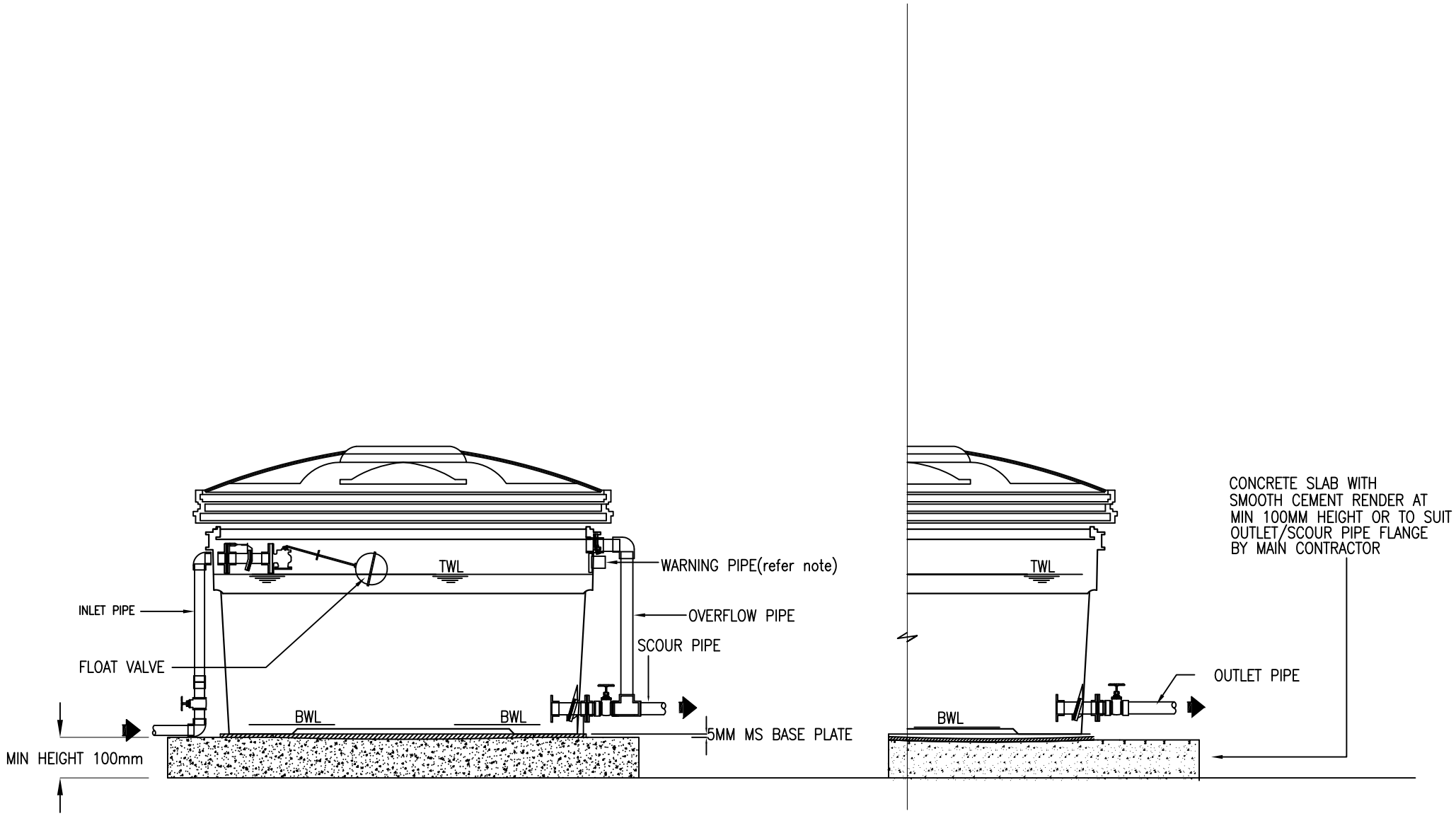

DETAIL OF INLET, OVERFLOW AND SCOUR PIPE

DETAILS OF PIPE OUTLET

DETAILS OF POLY TANK(P) TANK INSTALLATION

SCALE : NTS

NOTE:

1. Poly tank which is manufactured should comply with MS 1225
2. Warning pipe shall discharge in a conspicuous position preferably outside the building where this is appropriate.
3. Warning pipe/overflow pipe/scour pipe shall be discharged to the nearest drain.
4. Size for overflow pipe & scour pipe shall be bigger size than inlet pipe.
5. Overflow and warning pipe shall be combined for tank capacity less than 4,500 liters (1,000 gallons).

LEGEND:

TWL TOP WATER LEVEL

BWL BOTTOM WATER LEVEL

MS MILD STEEL

G.I GALVANIZED IRON

JKR MEKANIKAL

JASA KEPADA RAKYAT

CAWANGAN KEJURUTERAAN MEKANIKAL
Ibu Pejabat JKR Malaysia

INTERNAL COLD WATER PLUMBING SYSTEM

DETAILS OF POLY TANK INSTALLATION

DATE	SCALE
2017	N.T.S

DRAWING NUMBER:

CKM/STD/CWSP/CW/REV2017/05

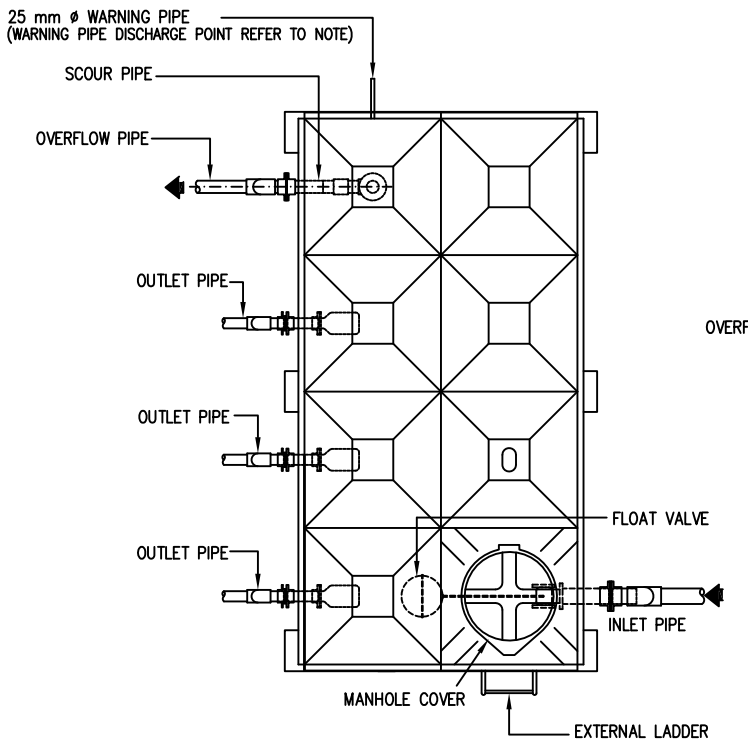

PLAN VIEW
SCALE : NTS

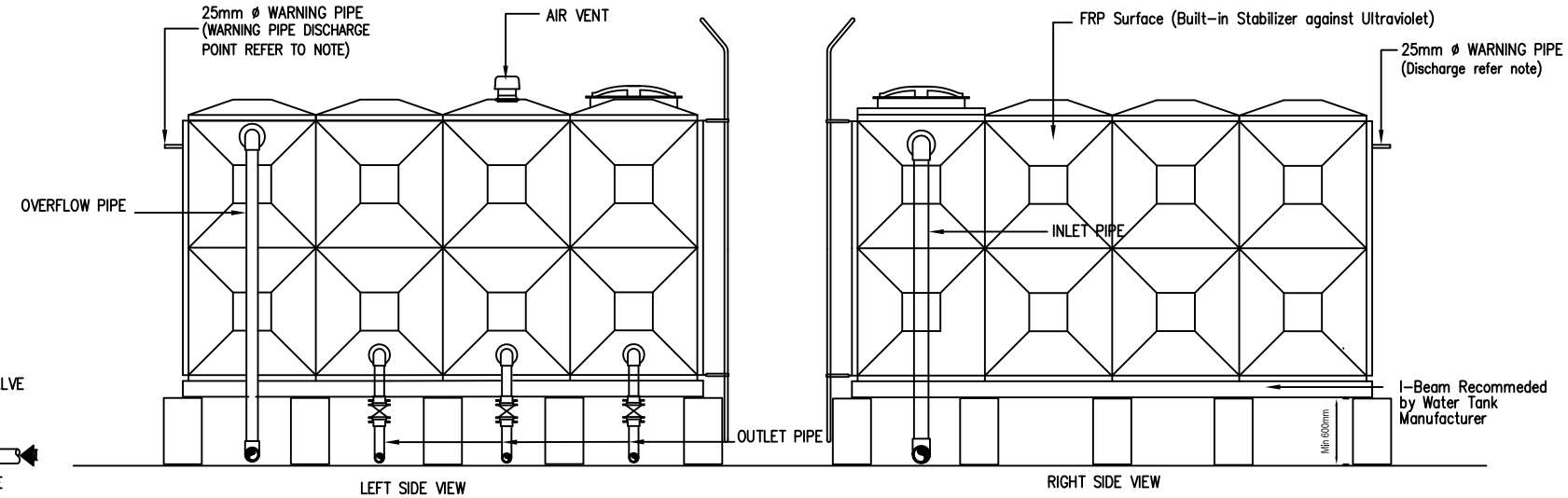

DETAIL OF FRP TANK INSTALLATION(Mutiple Outlet)
SCALE : NTS
(SOURCE: MS 1390:2010)

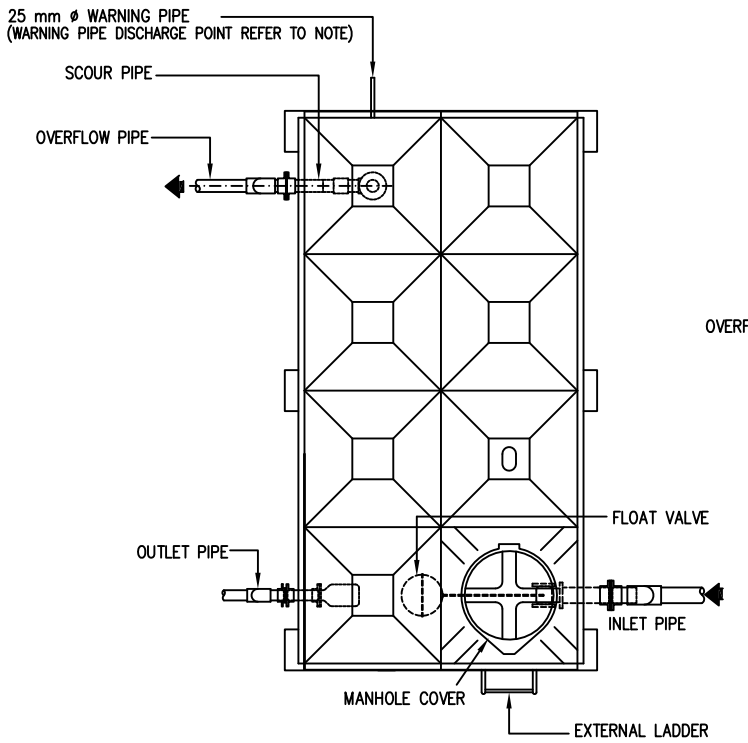

PLAN VIEW
SCALE : NTS

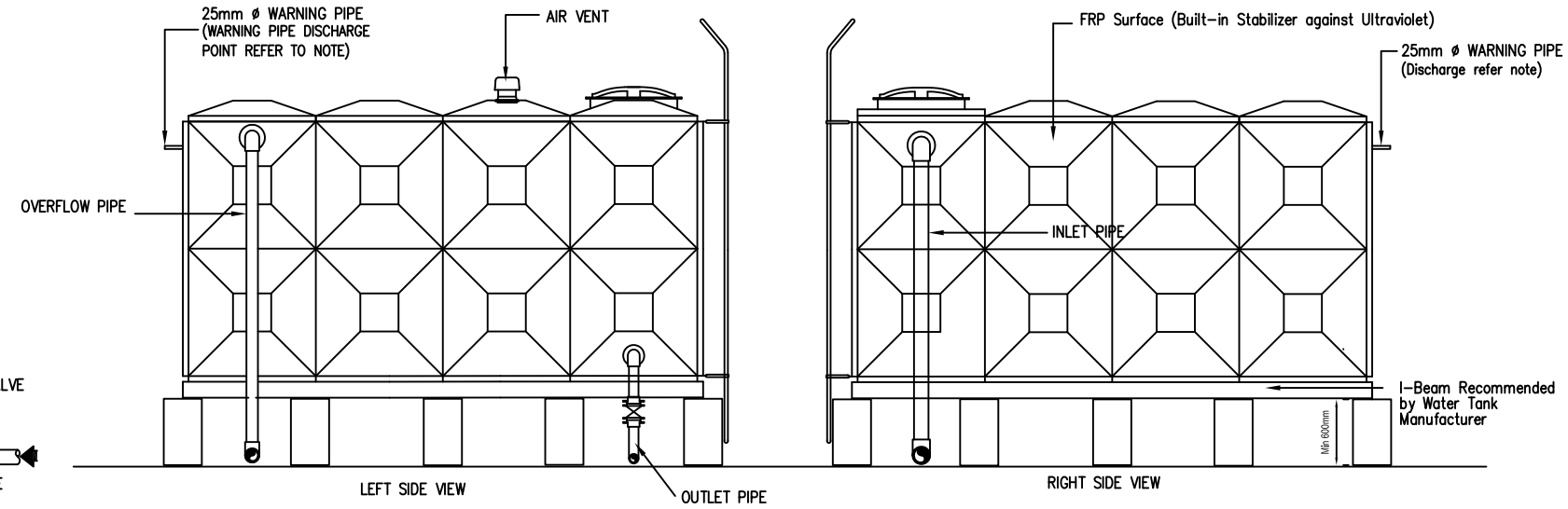

DETAILS OF FRP TANK INSTALLATION(Single Outlet)
SCALE : NTS
(SOURCE: MS 1390:2010)

NOTE:

1. All pipe routes and layouts are for guidance only.
2. The exact position for all outlet, inlet, scour, overflow, warning, sampling and connection pipes and also valves at the site will be determined by S.O.
3. Warning pipe shall discharge in a conspicuous position preferably outside the building where this is appropriate.
4. The exact location for all ventilating panels, manhole (c/w external and internal ladder) will be determined by S.O
5. Details drawing for concrete plinth water tank foundation shall refer to structural drawing.
6. Size for overflow pipe & scour pipe shall be bigger size than inlet pipe.
7. The maximun height from floor to first ladder step shall be 300mm.

LEGEND:

TWL TOP WATER LEVEL

BWL BOTTOM WATER LEVEL

G.I GALVANIZED IRON

JKR MEKANIKAL

JASA KEPADA RAKYAT

CAWANGAN KEJURUTERAAN MEKANIKAL
Ibu Pejabat JKR Malaysia

INTERNAL COLD WATER PLUMBING SYSTEM

DETAILS OF FRP TANK INSTALLATION

DATE	SCALE
2017	N.T.S

DRAWING NUMBER:

CKM/STD/CWSP/CW/REV2017/06

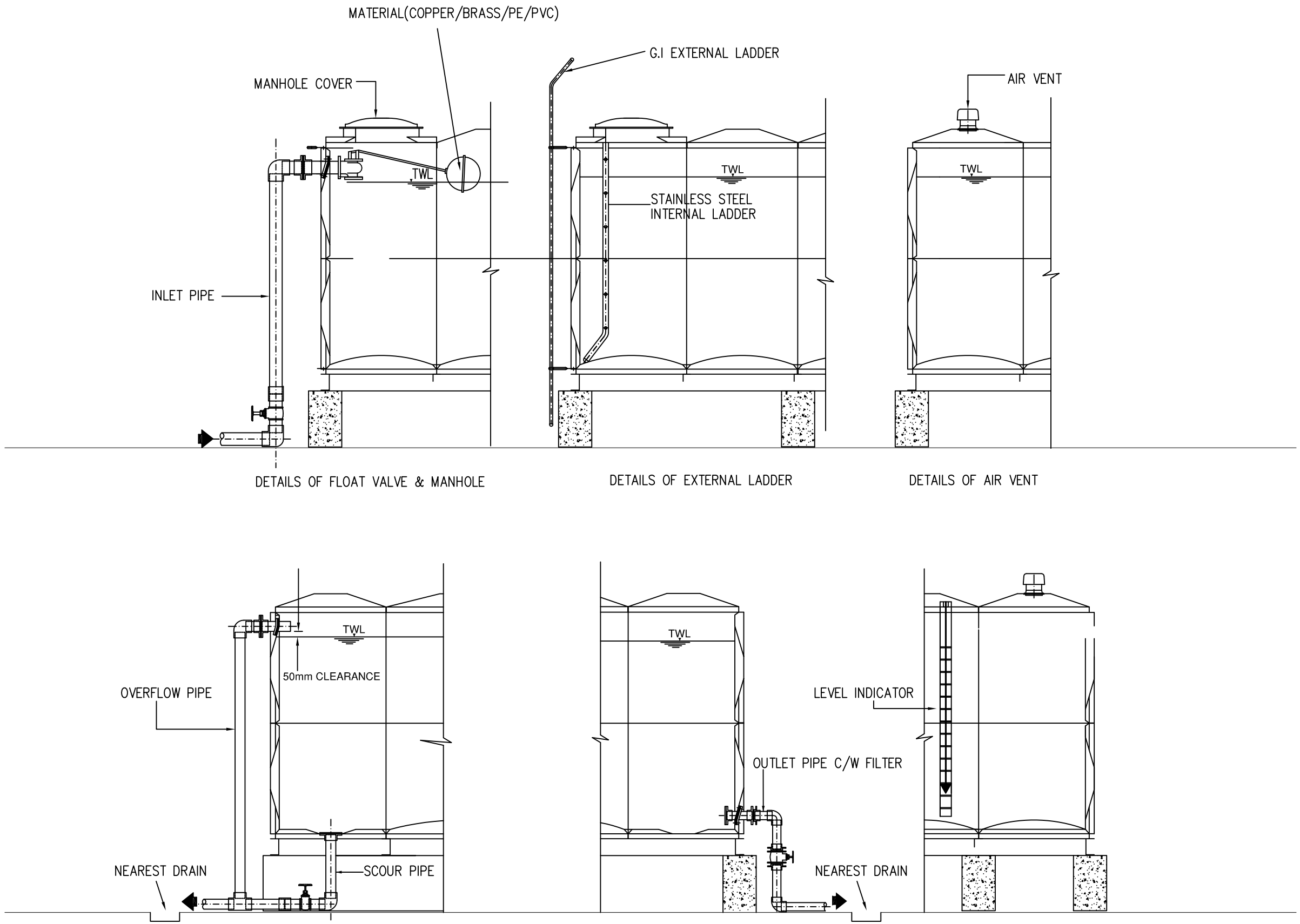

DETAILS OF FRP TANK-PIPE & MANHOLE INSTALLATION

SCALE : NTS

(SOURCE: MS 1390:2010)

NOTE:

1. All pipe's routes and layouts are for guidance only.
2. The exact position for all outlet, inlet, scour, overflow, warning, sampling and connection pipes and also valves at the site will be determined by S.O.
3. Warning pipe shall discharge in a conspicious position preferably outside the building where this is appropriate.
4. The exact location for all ventilating panels, manhole (c/w external and internal ladder) will be determined by S.O
5. Warning pipe/overflow pipe/scour pipe shall be discharge to the nearest drain.

LEGEND:

TWL TOP WATER LEVEL

BWL BOTTOM WATER LEVEL

G.I GALVANIZED IRON

JKR MEKANIKAL

JASA KEPADA RAKYAT

CAWANGAN KEJURUTERAAN MEKANIKAL
Ibu Pejabat JKR Malaysia

INTERNAL COLD WATER PLUMBING SYSTEM

DETAILS OF FRP TANK-PIPE & MANHOLE INSTALLATION

DATE	SCALE
2017	N.T.S

DRAWING NUMBER:

CKM/STD/CWSP/CW/REV2017/07

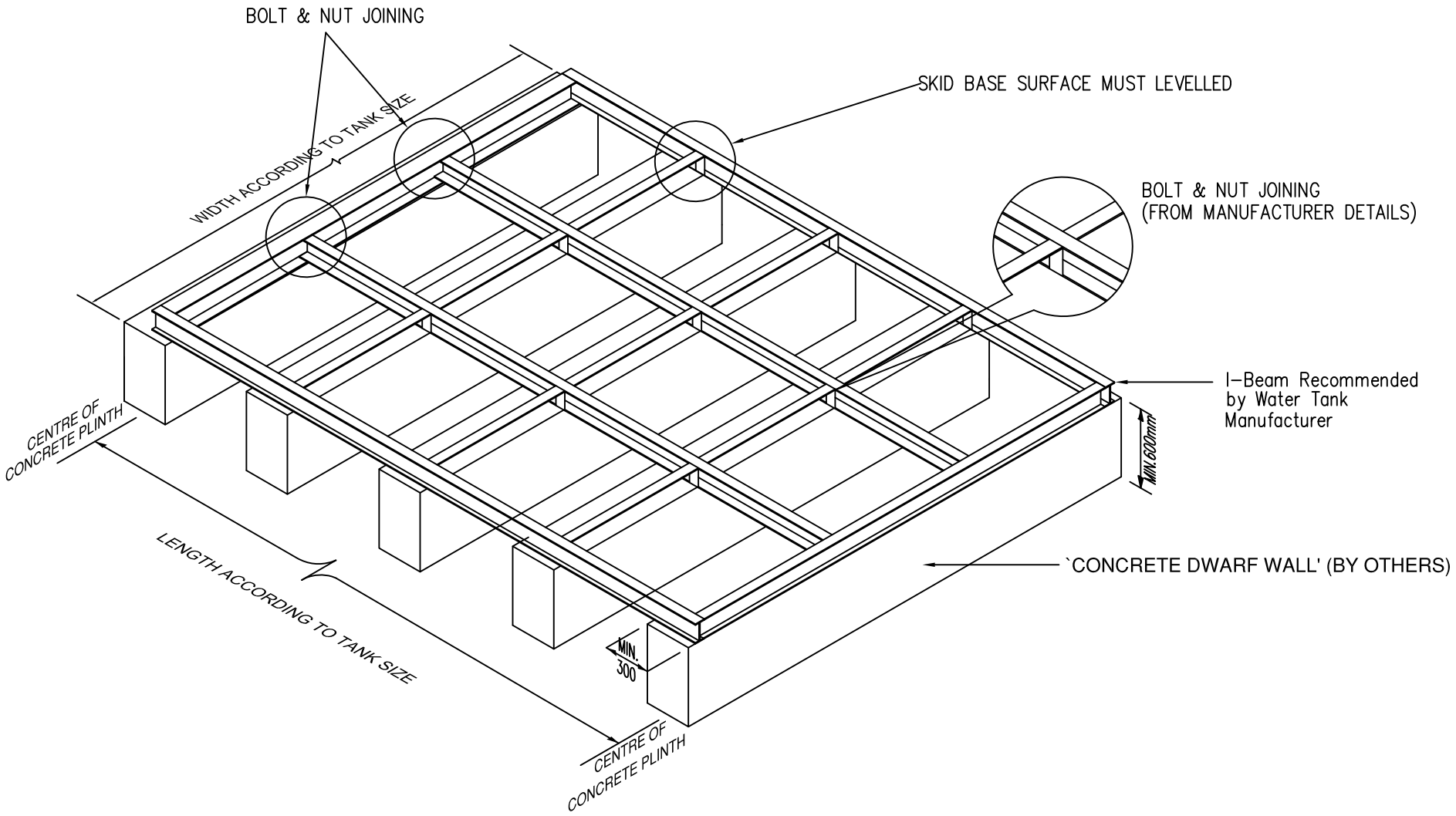

DETAILS OF FRP TANK-STEEL BASE INSTALLATION

SCALE : NTS

(SOURCE: MS 1390:2010)

JKR MEKANIKAL

JASA KEPADA RAKYAT

CAWANGAN KEJURUTERAAN MEKANIKAL
Ibu Pejabat JKR Malaysia

INTERNAL COLD WATER PLUMBING SYSTEM

DETAILS OF FRP TANK-STEEL BASE INSTALLATION

DATE	SCALE
2017	N.T.S

DRAWING NUMBER:

CKM/STD/CWSP/CW/REV2017/08

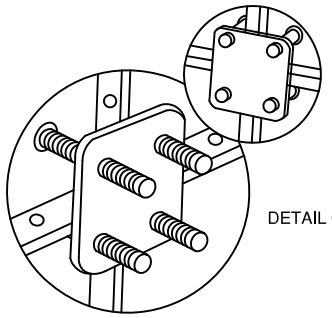

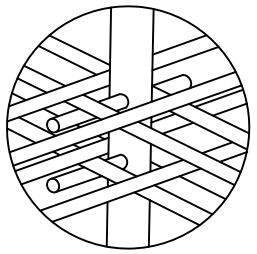

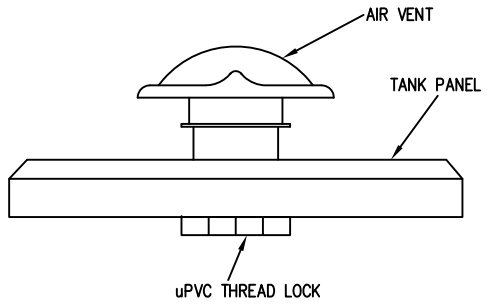

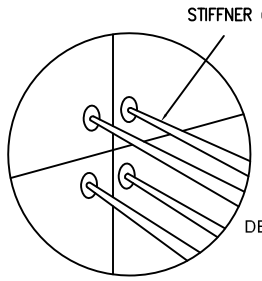

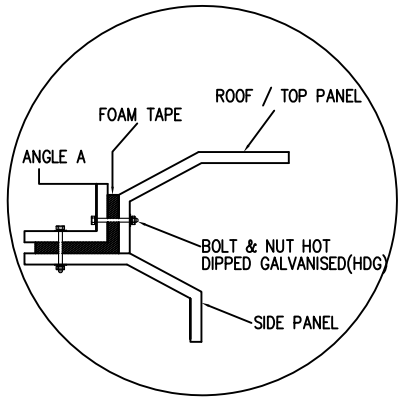

DETAIL OF `D':
DETAIL OF INSTALLATION FOR ROOF PANEL

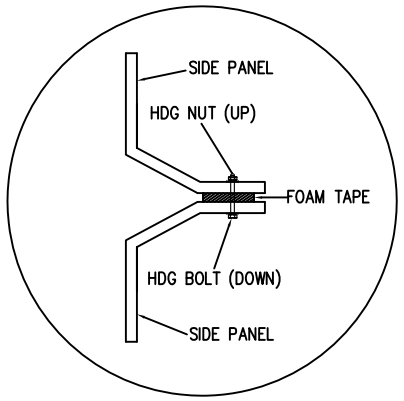

DETAIL OF `E':
DETAIL OF INSTALLATION FOR SIDE PANEL

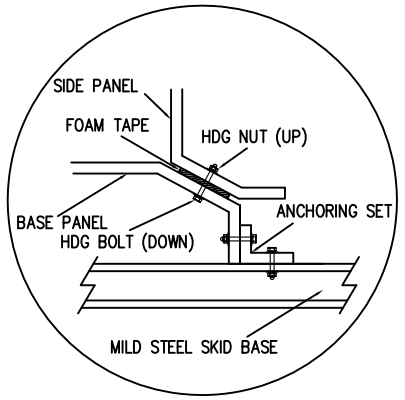

DETAIL OF `F':
DETAIL OF INSTALLATION FOR BASE PANEL

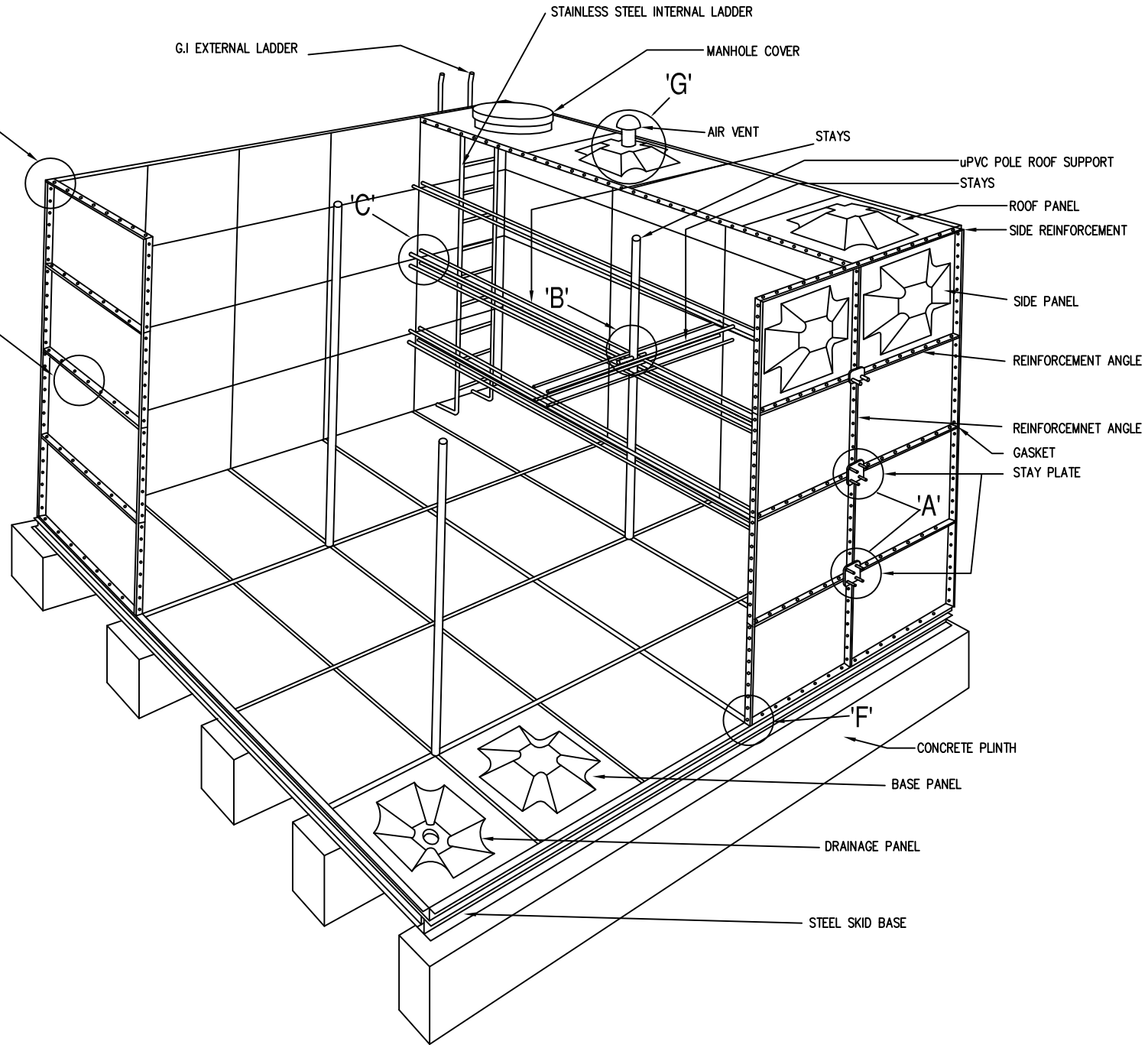

DETAILS OF FRP TANK INTERNAL REINFORCEMENT SUPPORT & PANEL
(FRP-TANK FOR INTERNAL USAGE ONLY)
SCALE : NTS

NOTE:

1. FRP water tank for internal installation only
2. Others material water tank can be installed outside the building where this is appropriate.
3. For pipe support refer to CKM/STD/CWSP/PIPE/REV2017/12
4. Details of design & manufacture of FRP tank to manufacturer recommendation.

LEGEND:

HDG HOT DIP GALVANIZED

JASA KEPADA RAKYAT

CAWANGAN KEJURUTERAAN MEKANIKAL
Ibu Pejabat JKR Malaysia

INTERNAL COLD WATER PLUMBING SYSTEM

DETAILS OF FRP TANK INTERNAL REINFORCEMENT SUPPORT & PANEL

DATE	SCALE
2017	N.T.S

DRAWING NUMBER:

CKM/STD/CWSP/CW/REV2017/09

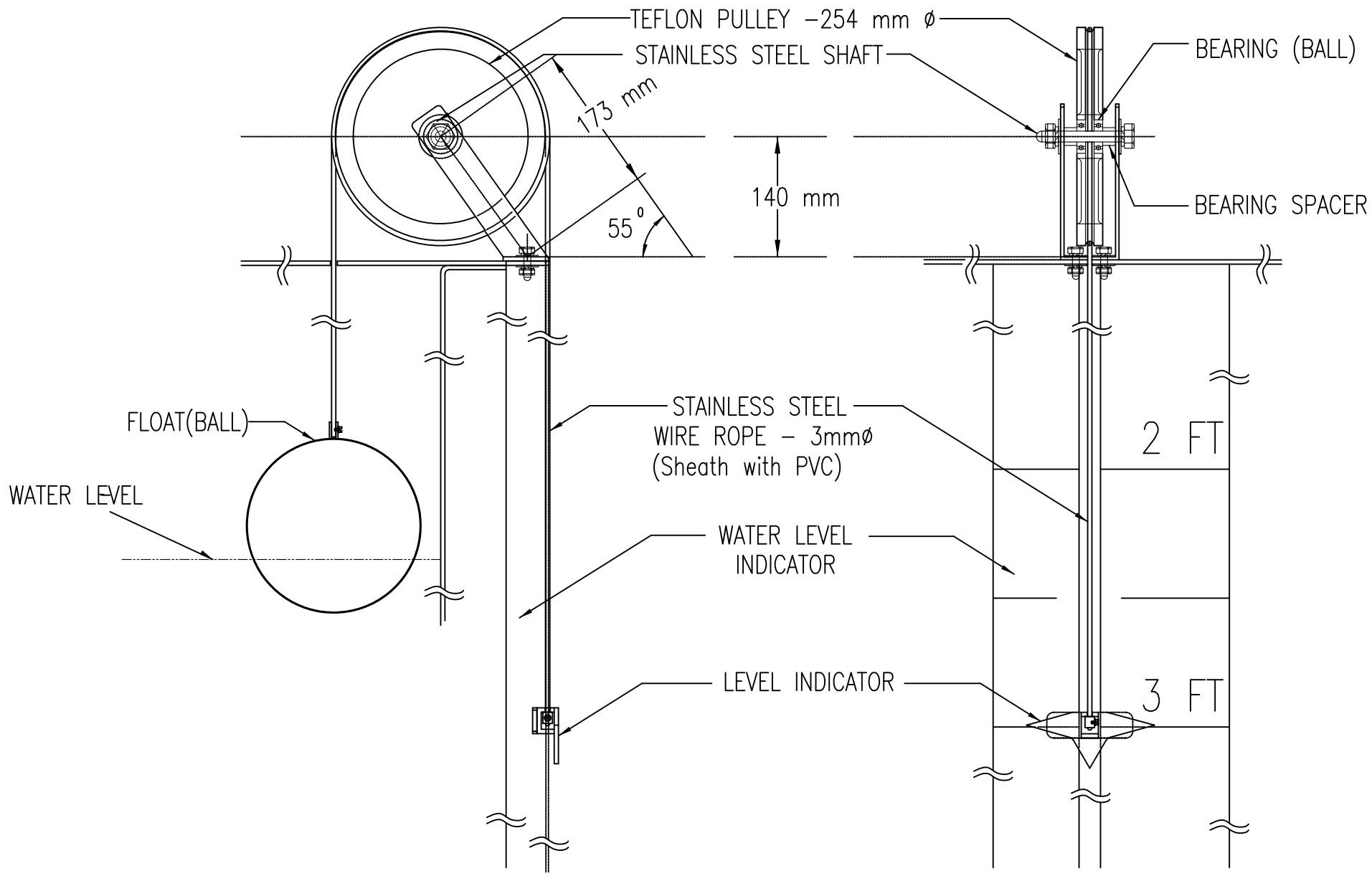

DETAILS OF WATER LEVEL INDICATOR INSTALLATION

SCALE : NTS

(SOURCE: MS 1390: 2010)

JKR MEKANIKAL

JASA KEPADA RAKYAT

CAWANGAN KEJURUTERAAN MEKANIKAL
Ibu Pejabat JKR Malaysia

INTERNAL COLD WATER PLUMBING SYSTEM

DETAILS OF WATER LEVEL INDICATOR INSTALLATION

DATE	SCALE
2017	N.T.S

DRAWING NUMBER:

CKM/STD/CWSP/CW/REV2017/10

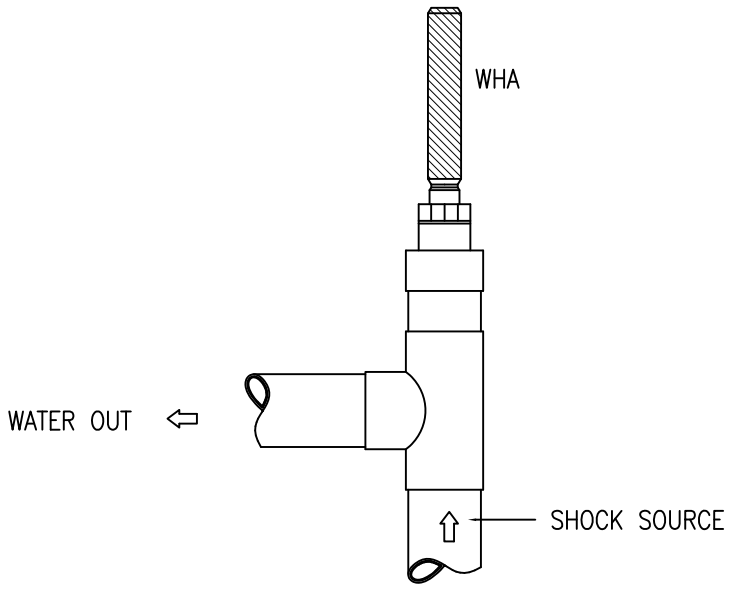

Details 'A'– Tee

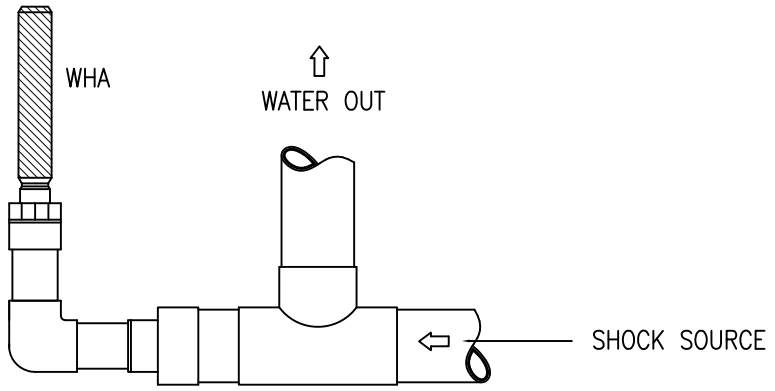

Details 'B'– Elbow

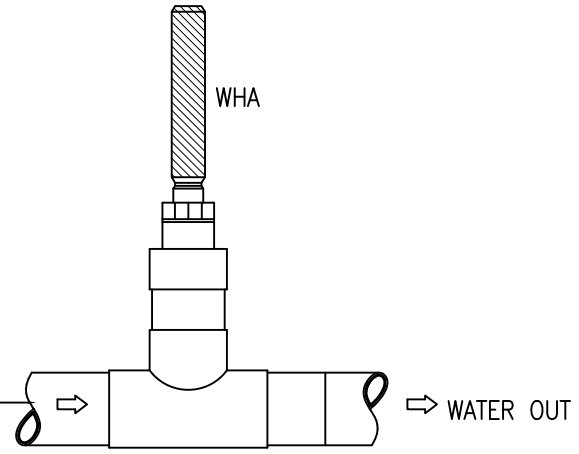

Details 'C'– Tee

TYPICAL INSTALLATION METHOD OF WATER HAMMER ARRESTER (WHA)
FOR PRESSURE NOT EXCEEDING 150 PSI (10.3 BAR)

SCALE : NTS

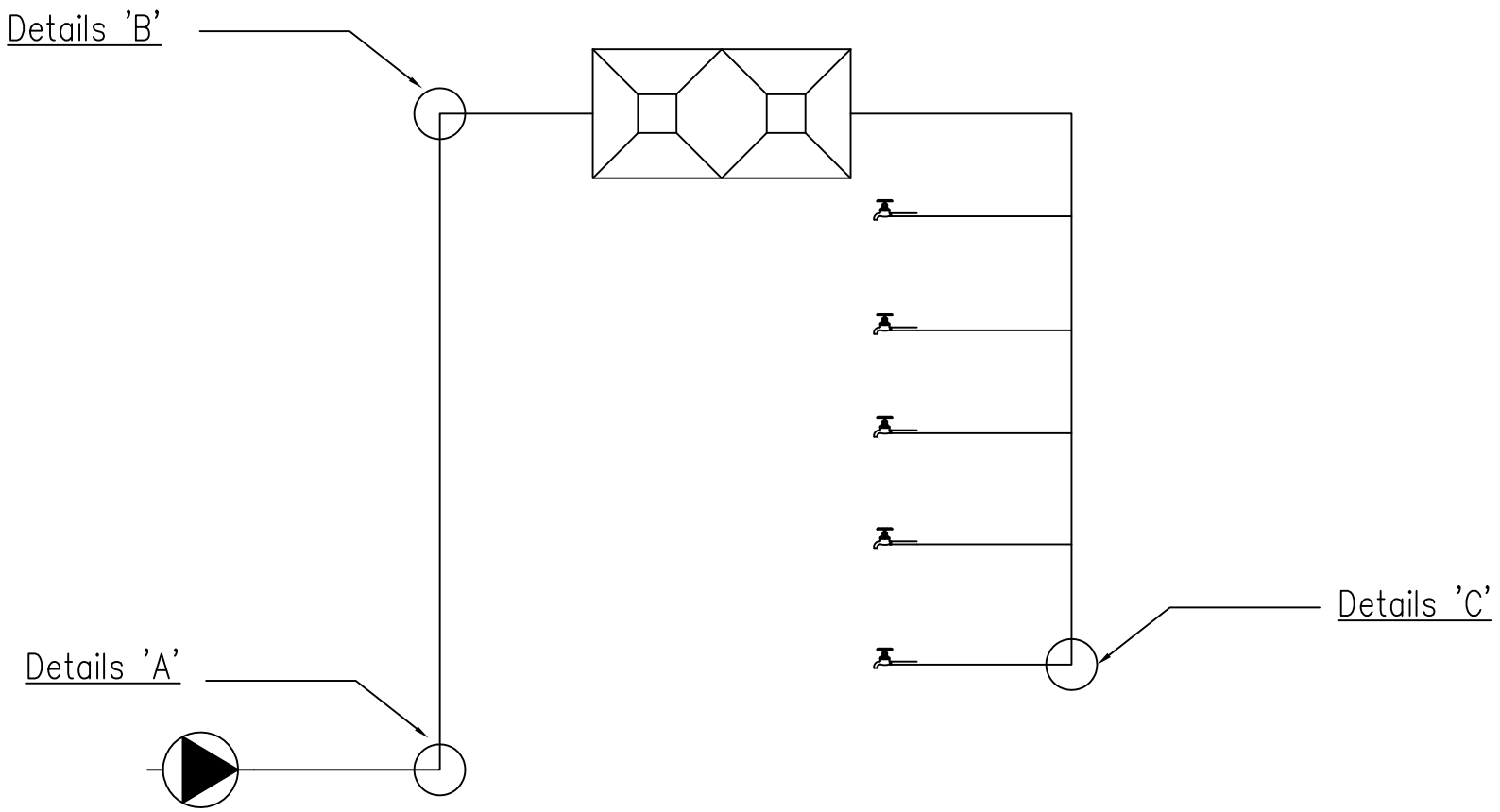

SCHEMATIC INSTALLATION LOCATION FOR WATER HAMMER ARRESTER (WHA)

SCALE : NTS

JKR MEKANIKAL

JASA KEPADA RAKYAT

CAWANGAN KEJURUTERAAN MEKANIKAL
Ibu Pejabat JKR Malaysia

INTERNAL COLD WATER PLUMBING SYSTEM

INSTALLATION METHOD OF WATER HAMMER ARRESTER (WHA) FOR PRESSURE NOT EXCEEDING 150 PSI (10.3 BAR)

DATE	SCALE
2017	N.T.S

DRAWING NUMBER:

CKM/STD/CWSP/CW/REV2017/11

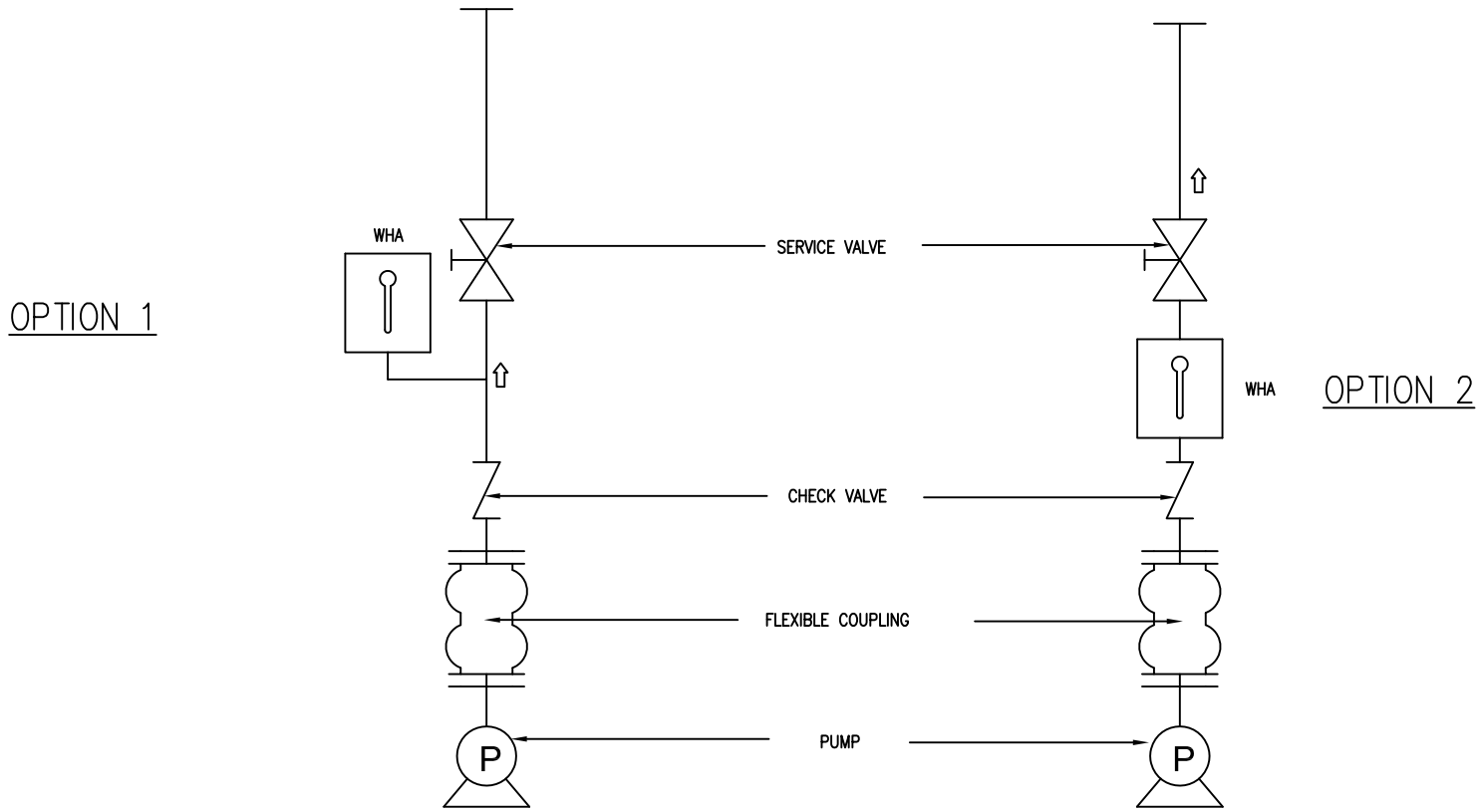

WHA INSTALLED AFTER COLD WATER PUMPING SYSTEM

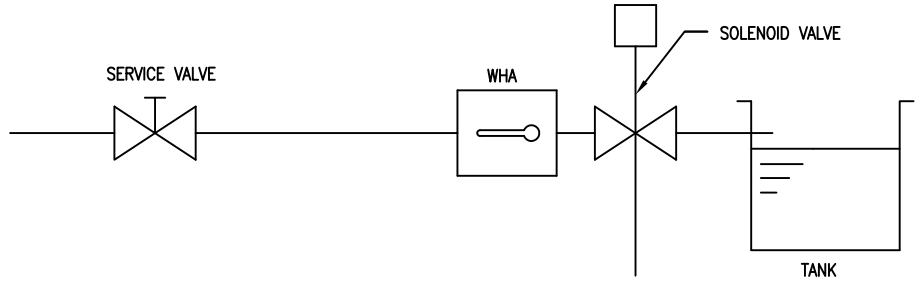

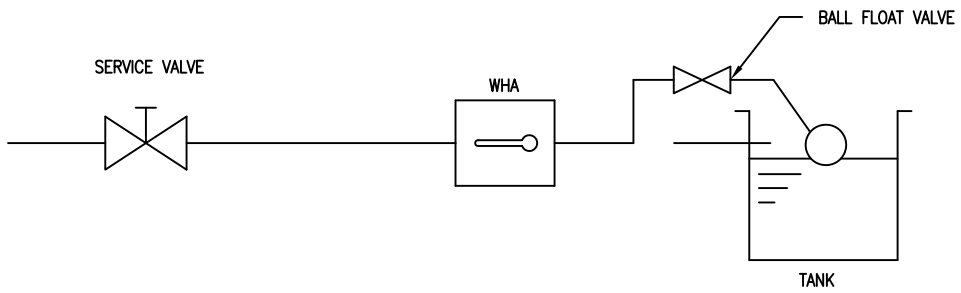

WHA INSTALLED NEXT TO SOLENOID VALVE OR BALL FLOAT VALVE

WHA TO TANK INLET
(IF APPLICABLE)

INSTALLATION METHOD OF WATER HAMMER ARRESTER (WHA)

FOR PRESSURE NOT EXCEEDING 232 PSI (16 BAR)

SCALE : NTS

NOTE:

1. Maximum working temperature = 60°C

JKR MEKANIKAL

JASA KEPADA RAKYAT

CAWANGAN KEJURUTERAAN MEKANIKAL
Ibu Pejabat JKR Malaysia

INTERNAL COLD WATER PLUMBING SYSTEM

INSTALLATION METHOD OF WATER HAMMER ARRESTER (WHA) FOR PRESSURE NOT EXCEEDING 232 PSI (16 BAR)

DATE	SCALE
2017	N.T.S

DRAWING NUMBER:

CKM/STD/CWSP/CW/REV2017/12

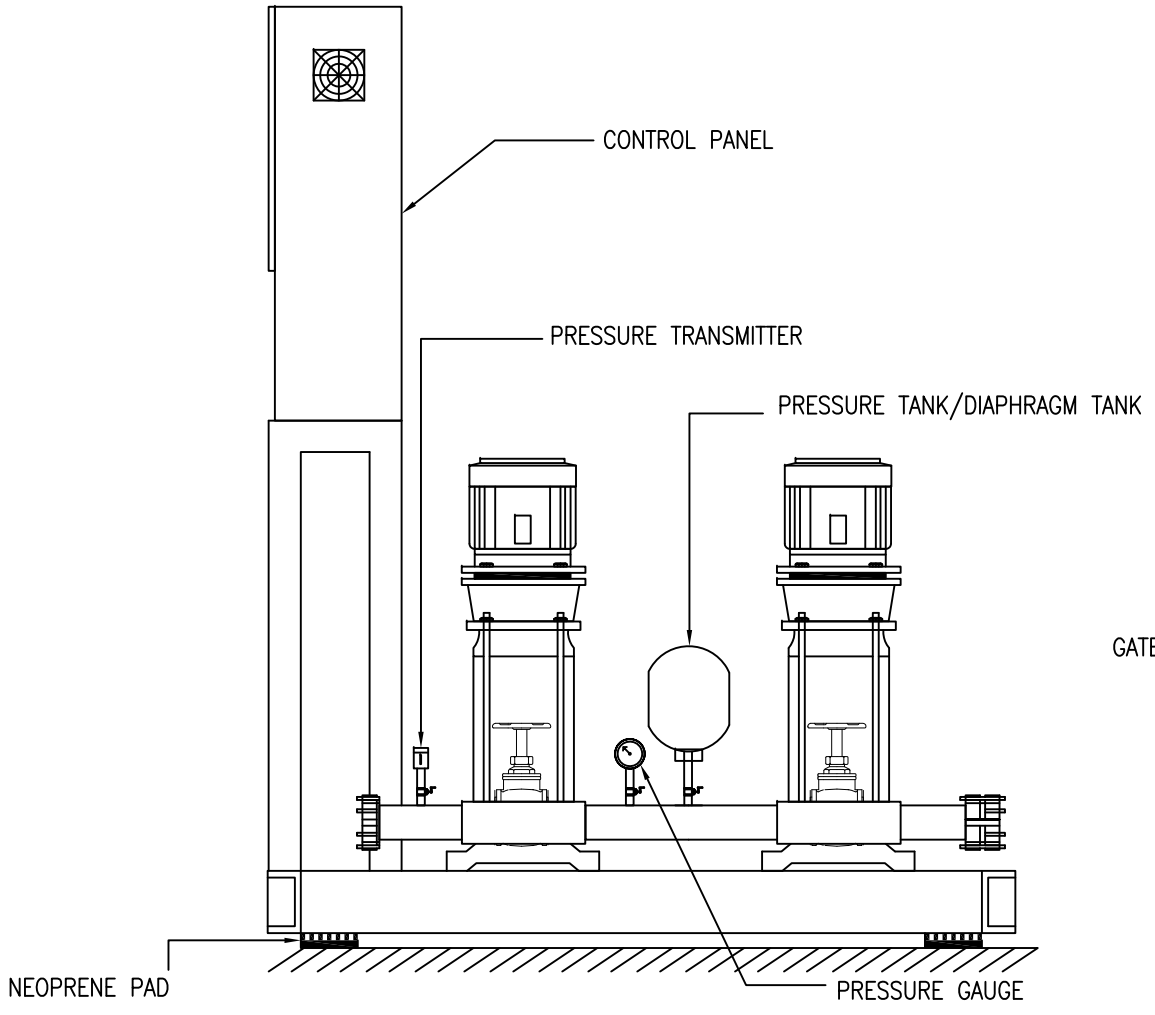

FRONT VIEW

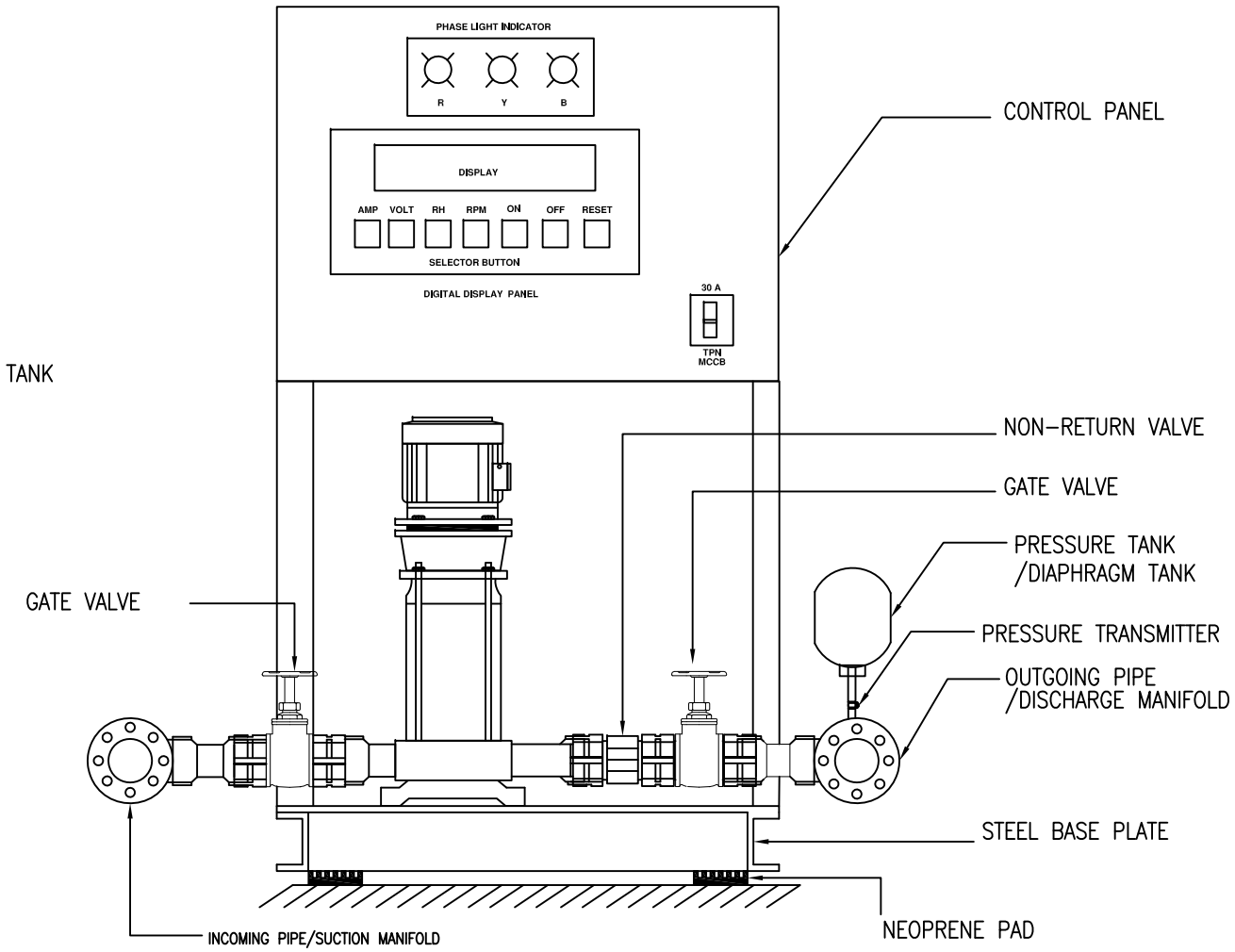

SIDE VIEW

TYPICAL DETAILS OF PACKAGE BOOSTER PUMP SYSTEM INSTALLATION

SCALE : NTS

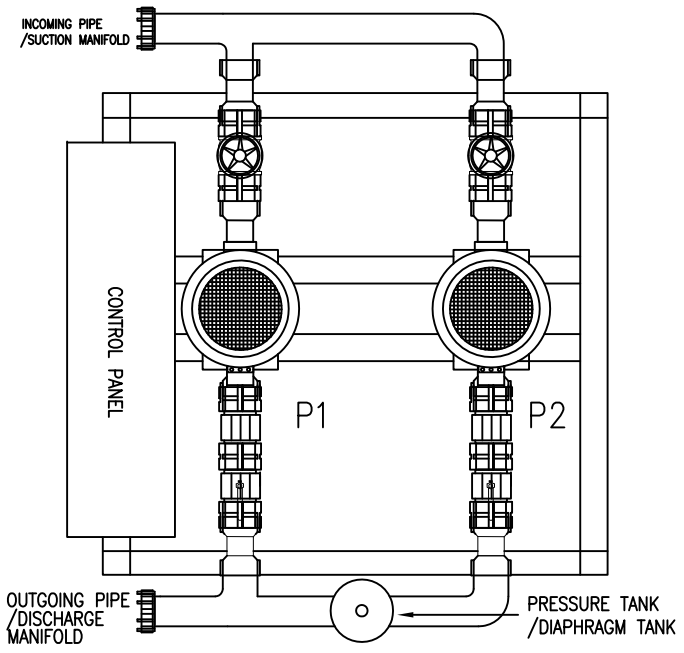

PLAN VIEW

SCALE : NTS

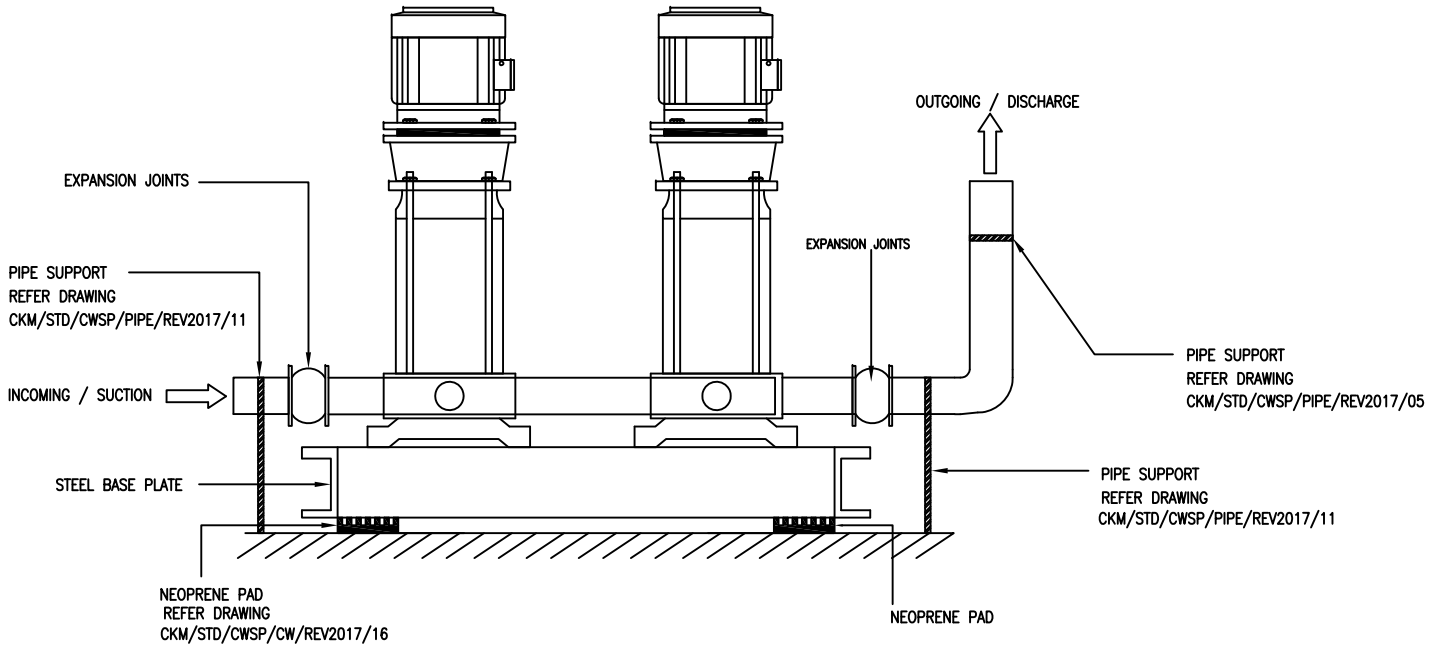

EXPANSION JOINTS AND PIPE SUPPORT INSTALLATION DETAILS

SCALE : NTS

LEGEND:

JASA KEPADA RAKYAT

CAWANGAN KEJURUTERAAN MEKANIKAL
Ibu Pejabat JKR Malaysia

INTERNAL COLD WATER PLUMBING SYSTEM

TYPICAL DETAILS OF PACKAGE
BOOSTER PUMP SYSTEM INSTALLATION

DATE	SCALE
2017	N.T.S

DRAWING NUMBER:

CKM/STD/CWSP/CW/REV2017/13

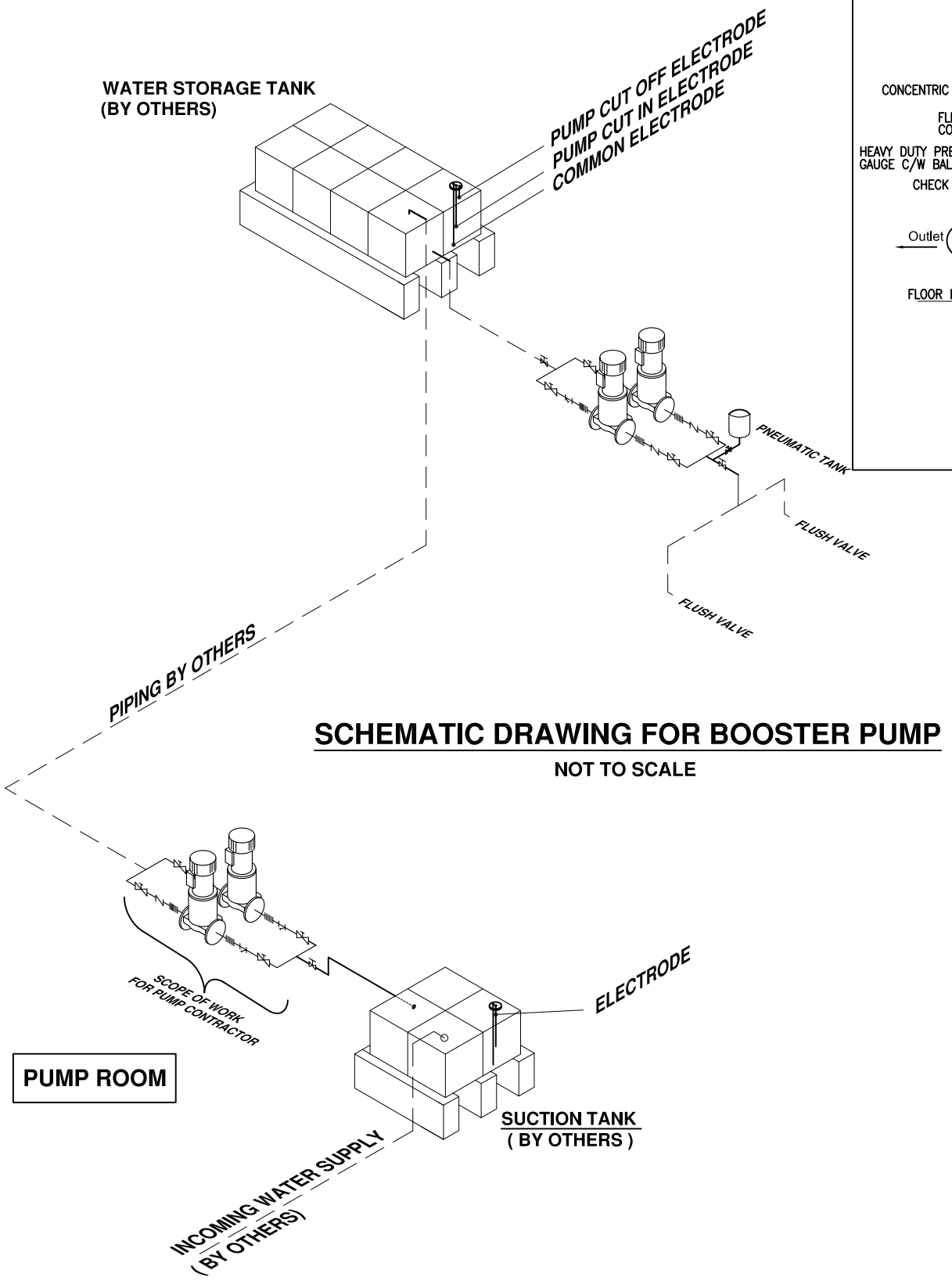

SCHEMATIC DRAWING FOR BOOSTER PUMP

NOT TO SCALE

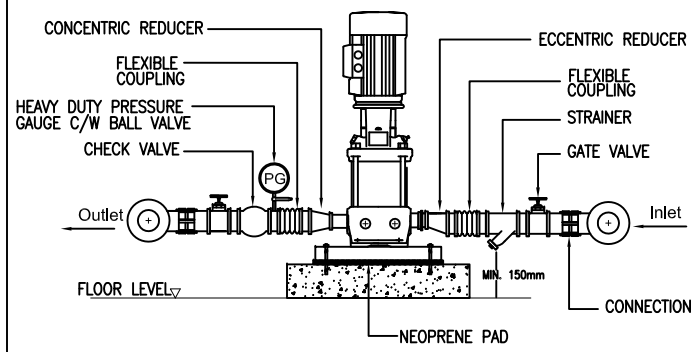

TYPICAL VALVES ARANGEMENT
SCALE : NTS

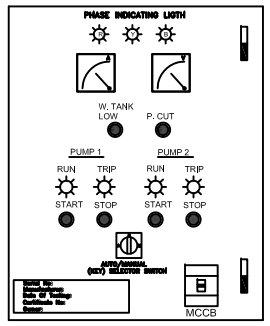

TYPICAL CONTROL PANEL
SCALE : NTS

DETAIL FOR BOOSTER PUMP

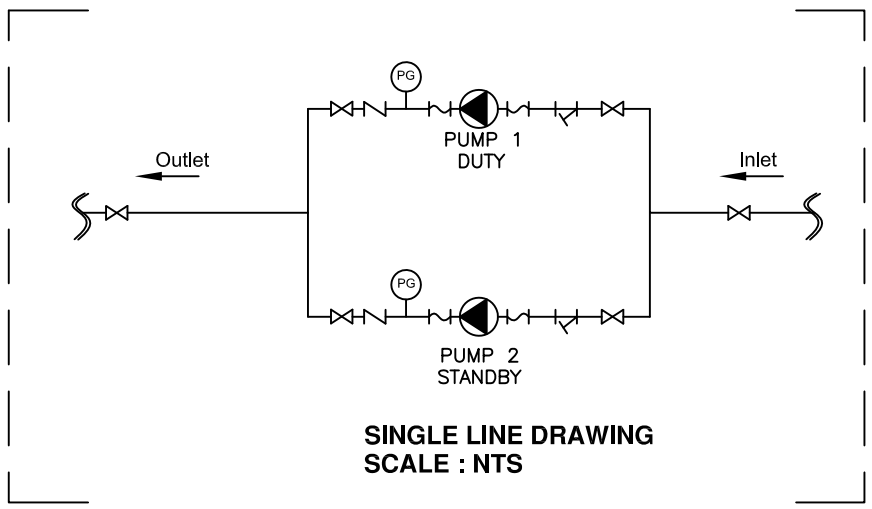

SINGLE LINE DRAWING
SCALE : NTS

LEGEND:

JASA KEPADA RAKYAT

CAWANGAN KEJURUTERAAN MEKANIKAL
Ibu Pejabat JKR Malaysia

INTERNAL COLD WATER PLUMBING SYSTEM

DETAILS FOR BOOSTER PUMP

DATE	SCALE
2017	N.T.S

DRAWING NUMBER:

CKM/STD/CWSP/CW/REV2017/14

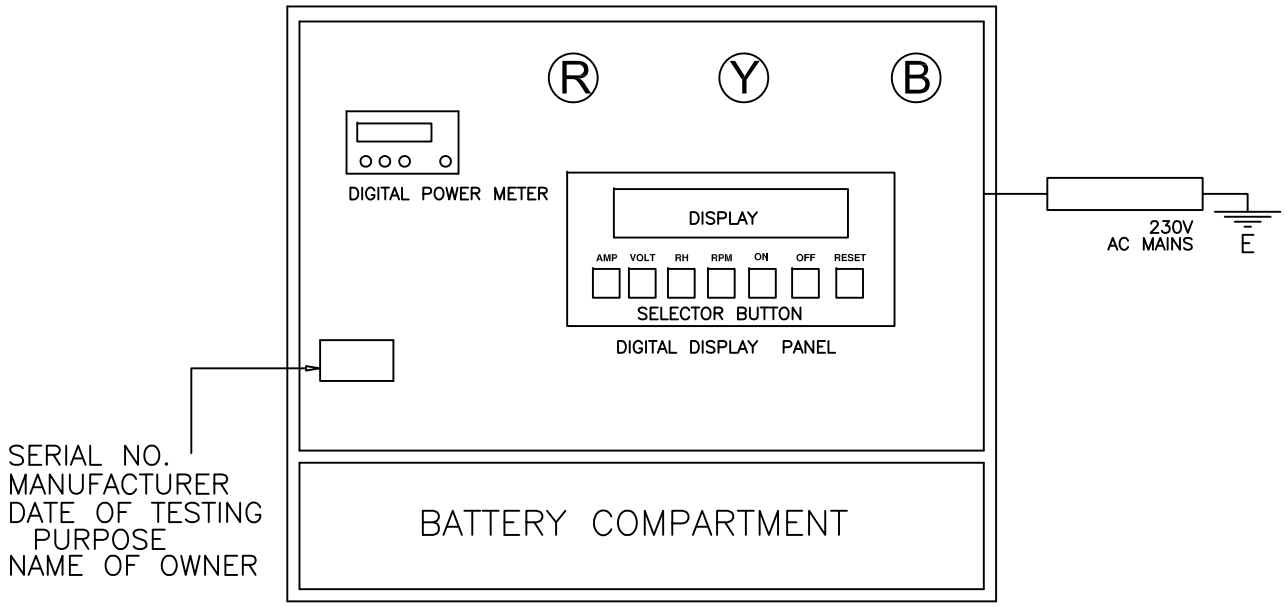

TYPICAL BOOSTER PUMP DIGITAL SWITCHBOARD

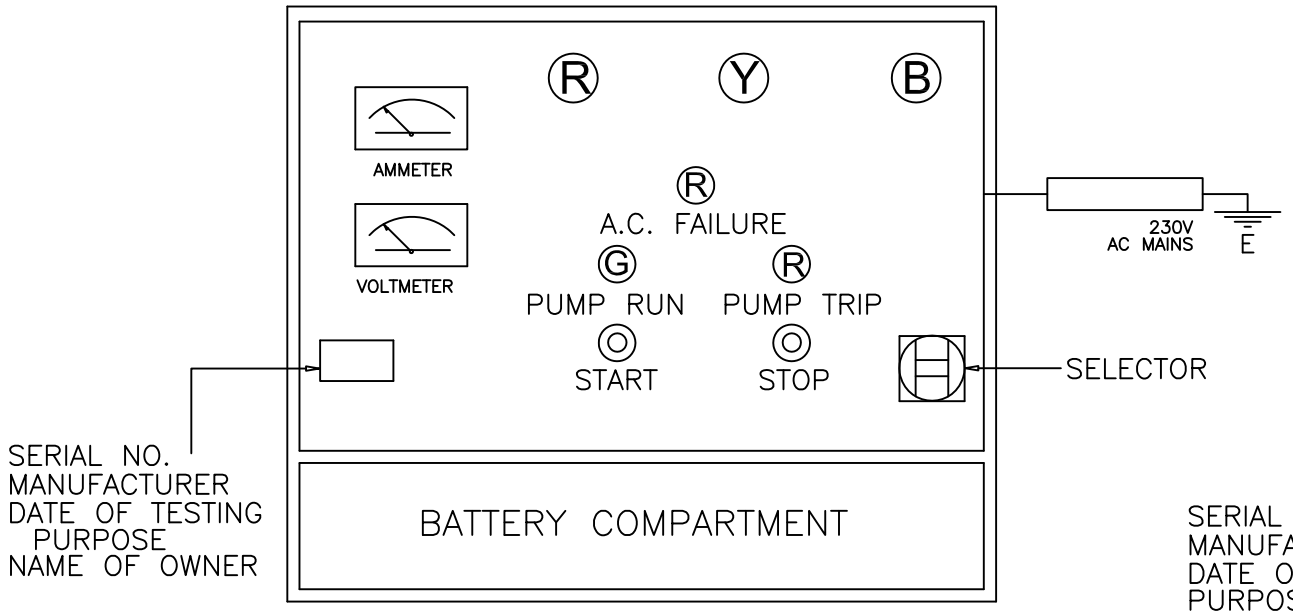

TYPICAL BOOSTER PUMP SWITCHBOARD

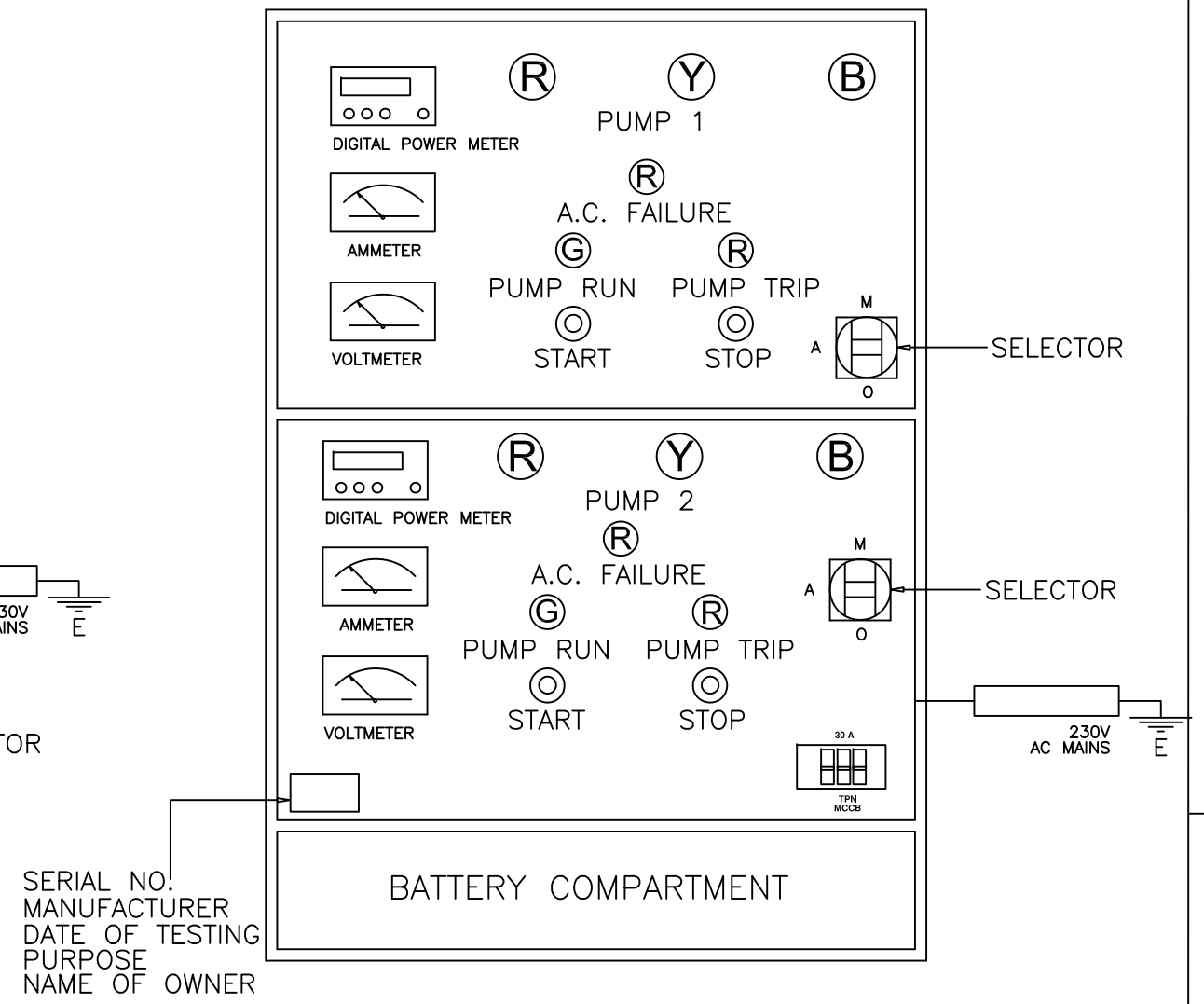

TYPICAL BOOSTER PUMP SWTICHBOARD

LEGEND:

- R — RED INDICATOR LIGHT
- Y — YELLOW INDICATOR LIGHT
- B — BLUE INDICATOR LIGHT
- G — GREEN INDICATOR LIGHT

JKR MEKANIKAL

JASA KEPADA RAKYAT

CAWANGAN KEJURUTERAAN MEKANIKAL
Ibu Pejabat JKR Malaysia

INTERNAL COLD WATER PLUMBING SYSTEM

TYPICAL BOOSTER PUMP SWTICHBOARD

DATE	SCALE
2017	N.T.S

DRAWING NUMBER:

CKM/STD/CWSP/CW/REV2017/15

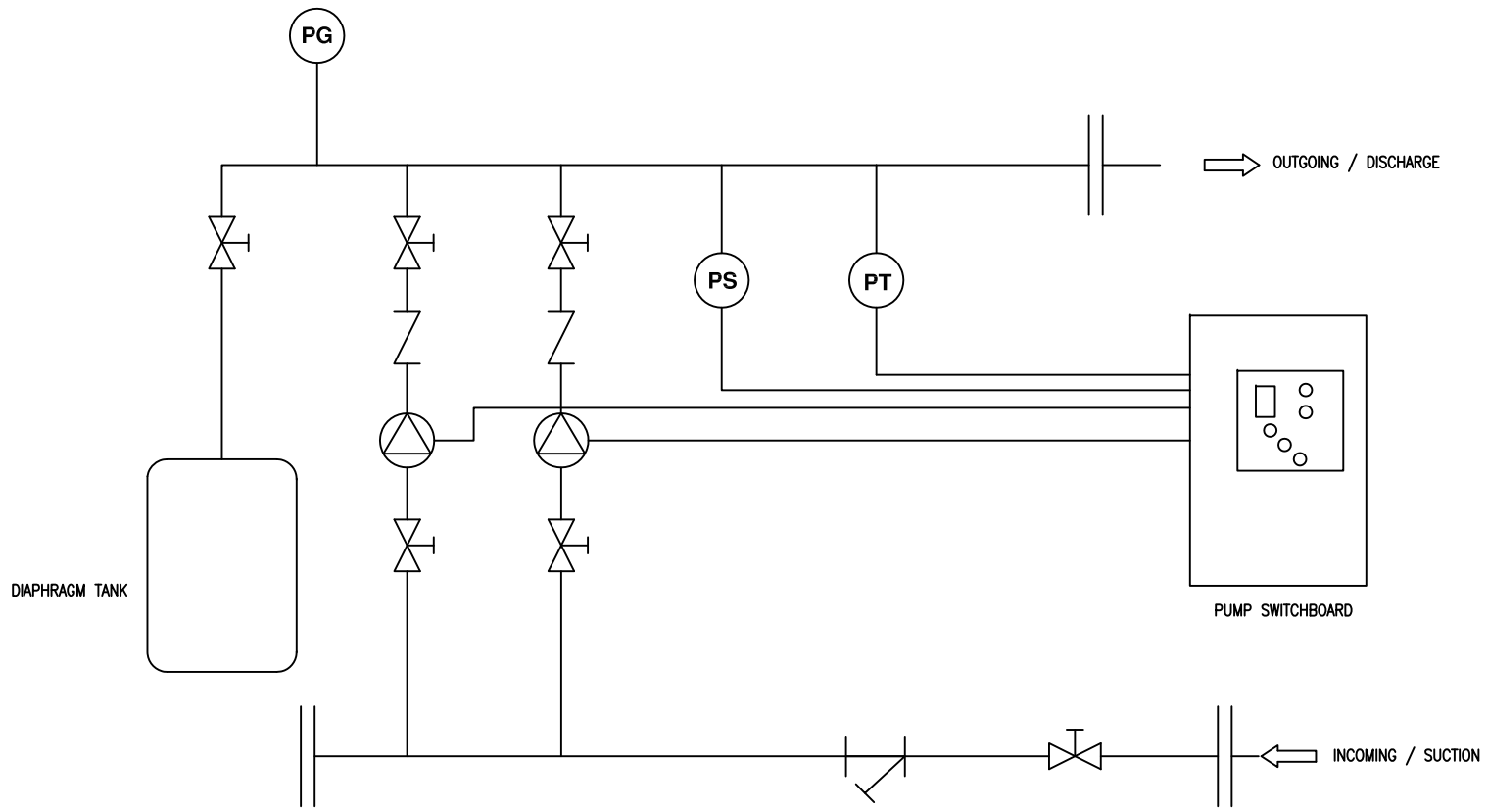

SCHEMATIC DETAILS OF PACKAGED BOOSTER PUMP SYSTEM

SCALE : NTS

LEGEND:

- PG — PRESSURE GAUGE
- PS — PRESSURE SWITCH
- PT — PRESSURE TRANSMITTER
- PUMP
- GATE VALVE
- NON-RETURN VALVE
- FLANGE COUPLING
- STRAINER

JKR MEKANIKAL

JASA KEPADA RAKYAT

CAWANGAN KEJURUTERAAN MEKANIKAL
Ibu Pejabat JKR Malaysia

INTERNAL COLD WATER PLUMBING SYSTEM

SCHEMATIC DETAILS OF PACKAGE BOOSTER PUMP SYSTEM

DATE	SCALE
2017	N.T.S

DRAWING NUMBER:

CKM/STD/CWSP/CW/REV2017/16

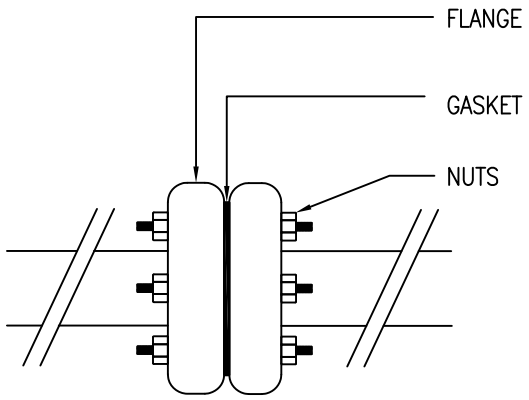

FLANGE INSTALLATION DETAILS

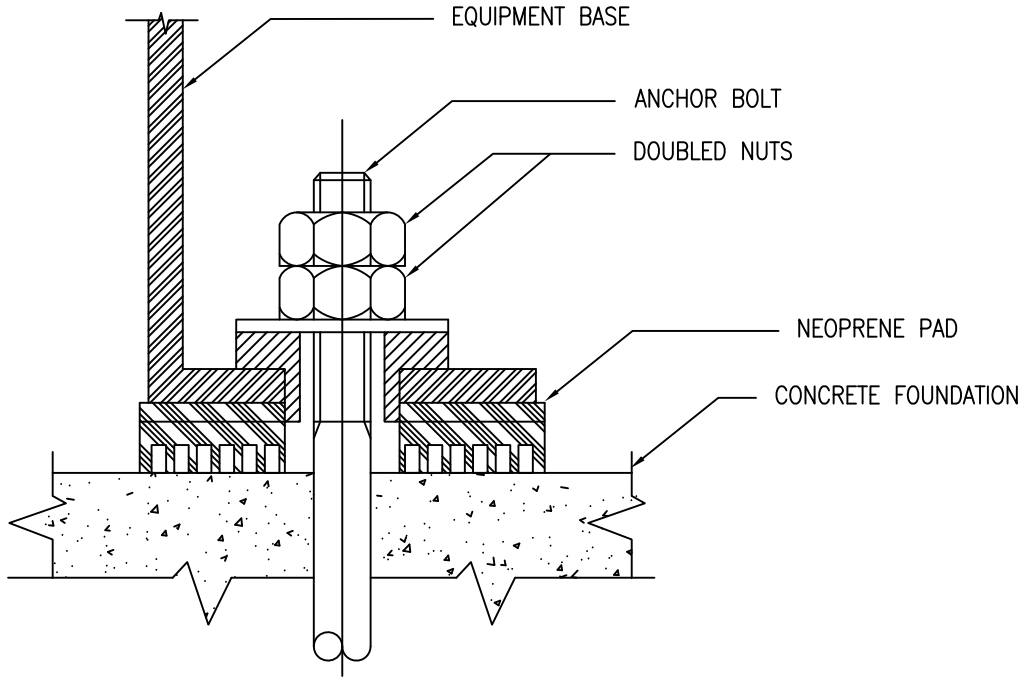

NEOPRENE PAD INSTALLATION DETAILS

DETAILS OF FLANGE & NEOPRENE PAD INSTALLATION

SCALE : NTS

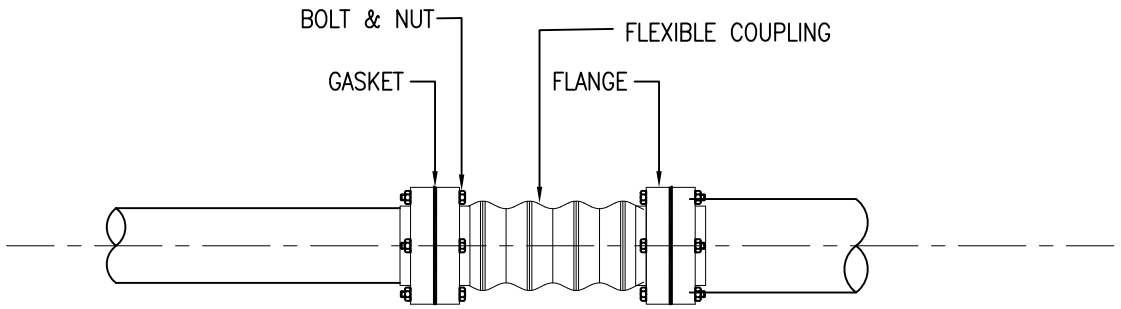

TYPICAL FLEXBILE COUNPLING/EXPANSION JOINT CONNECTION

SCALE : NTS

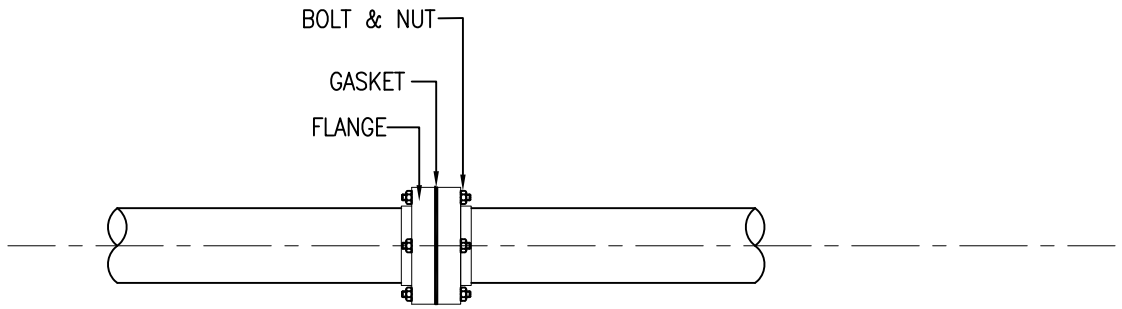

TYPICAL FLANGE JOINT CONNECTION

SCALE : NTS

LEGEND:

JKR MEKANIKAL

JASA KEPADA RAKYAT

CAWANGAN KEJURUTERAAN MEKANIKAL
Ibu Pejabat JKR Malaysia

INTERNAL COLD WATER PLUMBING SYSTEM

DETAILS OF FLANGE & NEOPRENE PAD INSTALLATION

DATE	SCALE
2017	N.T.S

DRAWING NUMBER:

CKM/STD/CWSP/CW/REV2017/17

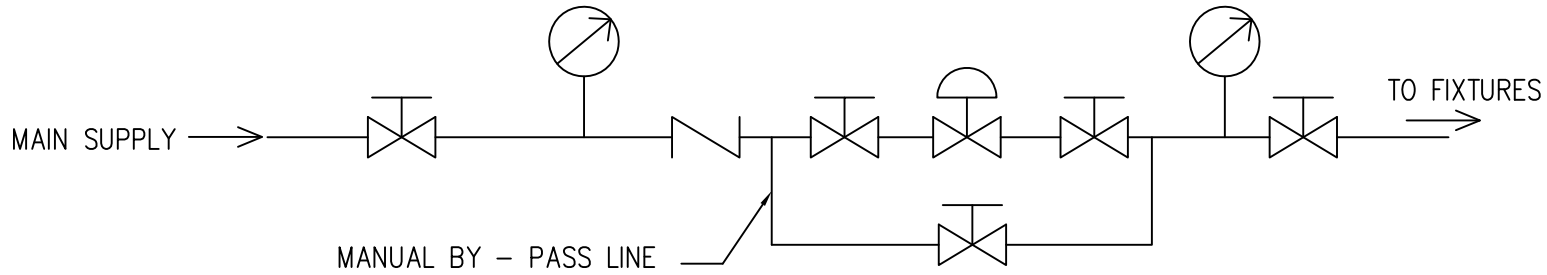

TYPICAL INSTALLATION

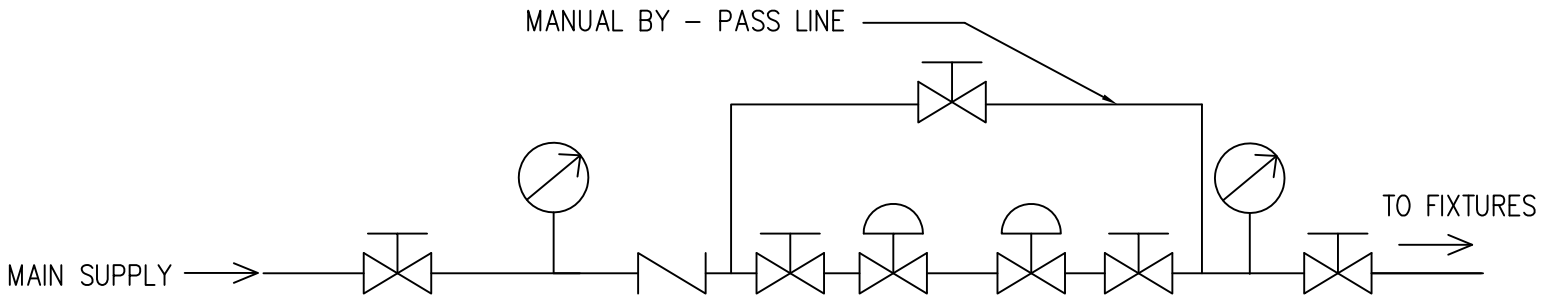

SERIES INSTALLATION

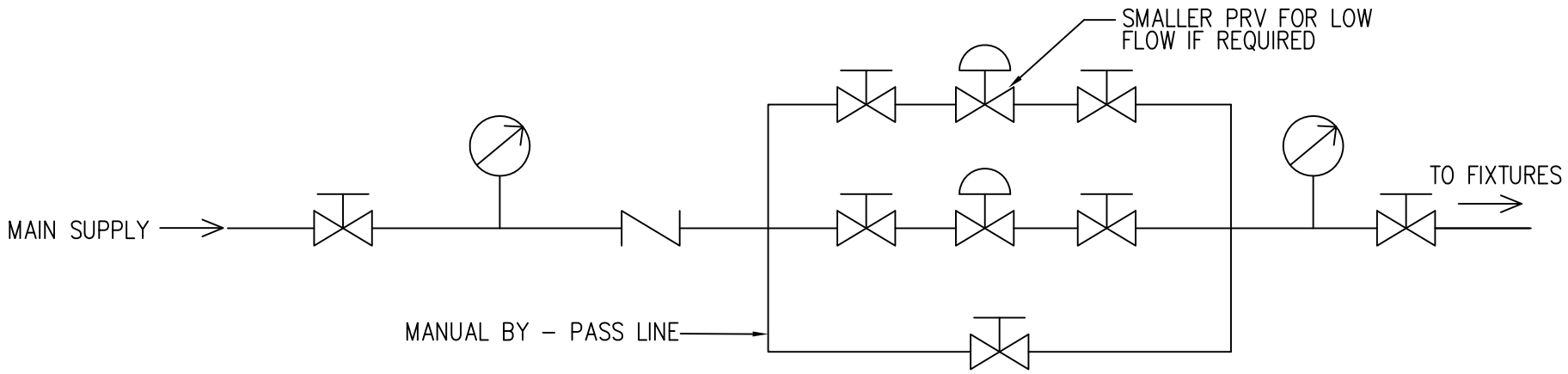

PARALLEL INSTALLATION

DETAILS OF PRESSURE REDUCING VALVE (PRV) INSTALLATION

SCALE : NTS

NOTE:

1. The valve should be installed by licensed plumber in accordance with local codes and ordinances.
2. The valve should be installed where it is accesible with sufficient clearance for cleaning, service or adjustment.
3. The designer should advise architect the size of service shaft to accomodate the PRV installation.
4. PRV shall be reduces the pressures of the water goes through it and obtaining a regulated and constant value at its outlet.

   Its shall be protect the whole installation from problems due to excess pressure : noise in pipes, water hammer & premature wear

   The PRV shall be completely automatic.

LEGEND:

- SHUT OFF VALVE
- PRESSURE REDUCING VALVE (PRV)
- CHECK VALVE
- PRESSURE GAUGE

JKR MEKANIKAL

JASA KEPADA RAKYAT

CAWANGAN KEJURUTERAAN MEKANIKAL
Ibu Pejabat JKR Malaysia

INTERNAL COLD WATER PLUMBING SYSTEM

DETAILS OF PRESSURE REDUCING VALVE (PRV) INSTALLATION

DATE	SCALE
2017	N.T.S

DRAWING NUMBER:

CKM/STD/CWSP/CW/REV2017/18

SANITARY PLUMBING SYSTEM

JKR
MEKANIKAL

JASA KEPADA RAKYAT

Diameter (mm)	Surface Water Drains		Fouls Drains	
	Main Drain 100% gradient	Branch Drain 50% gradient	Main Drain 80% gradient	Branch Drain 40% gradient
75	1 : 75	1 : 35	1 : 60	1 : 30
100	1 : 100	1 : 50	1 : 80	1 : 40
150	1 : 150	1 : 75	1 : 120	1 : 60
225	1 : 225	1 : 110	1 : 180	1 : 90
300	1 : 300	1 : 150	1 : 240	1 : 120

RECOMMENDED MINIMUM GRADIENTS

Peak flow (litres/sec)	Pipe Size (mm)	Minimum Gradient (1 in .....)	Maximum Capacity (litres/sec)
< 1	75 100	1 : 40 1 : 40	4.1 9.2
> 1	75 100 150	1 : 80 1 : 80 * 1 : 150 **	2.8 6.3 15.0

Notes :
* – Minimum 1 WC
** – Minimum 5 WCs

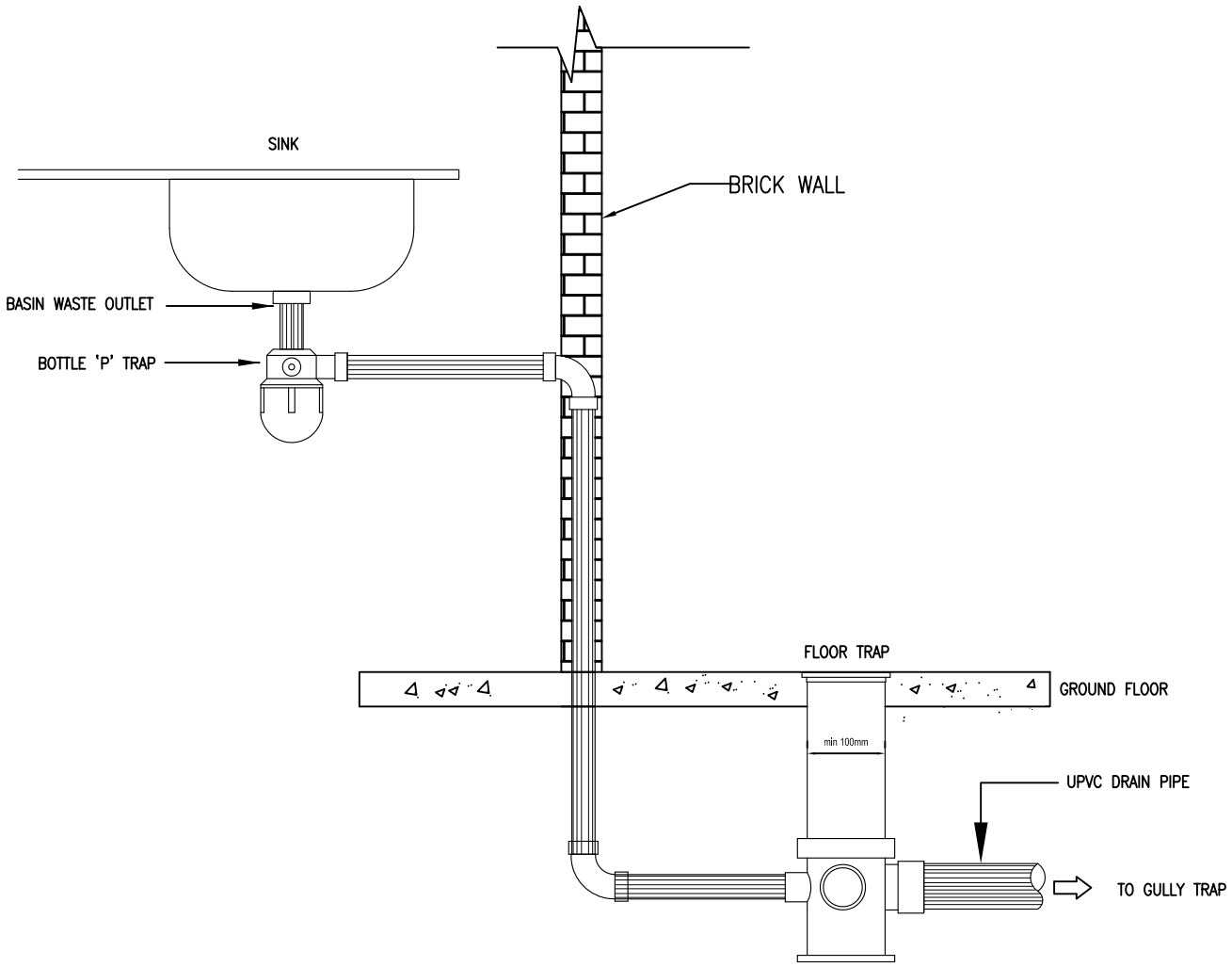

DETAILS OF SANITARY PIPE INSTALLATION FOR SINK–GROUND FLOOR

[Gradient pipe refer to BS EN 12056 Part 2 (2000)]

SCALE: N.T.S

JKR MEKANIKAL

JASA KEPADA RAKYAT

CAWANGAN KEJURUTERAAN MEKANIKAL
Ibu Pejabat JKR Malaysia

SANITARY PLUMBING SYSTEM

DETAILS OF SANITARY PIPE INSTALLATION FOR SINK-GROUND FLOOR

DATE:	SCALE:
2017	NTS

DRAWING NUMBER:

CKM/STD/CWSP/SP/REV2017/01

Diameter (mm)	Surface Water Drains		Fouls Drains	
	Main Drain 100% gradient	Branch Drain 50% gradient	Main Drain 80% gradient	Branch Drain 40% gradient
75	1 : 75	1 : 35	1 : 60	1 : 30
100	1 : 100	1 : 50	1 : 80	1 : 40
150	1 : 150	1 : 75	1 : 120	1 : 60
225	1 : 225	1 : 110	1 : 180	1 : 90
300	1 : 300	1 : 150	1 : 240	1 : 120

RECOMMENDED MINIMUM GRADIENTS

Peak flow (litres/sec)	Pipe Size (mm)	Minimum Gradient (1 in .....)	Maximum Capacity (litres/sec)
< 1	75 100	1 : 40 1 : 40	4.1 9.2
> 1	75 100 150	1 : 80 1 : 80 * 1 : 150 **	2.8 6.3 15.0

Notes :
* – Minimum 1 WC
** – Minimum 5 WCs

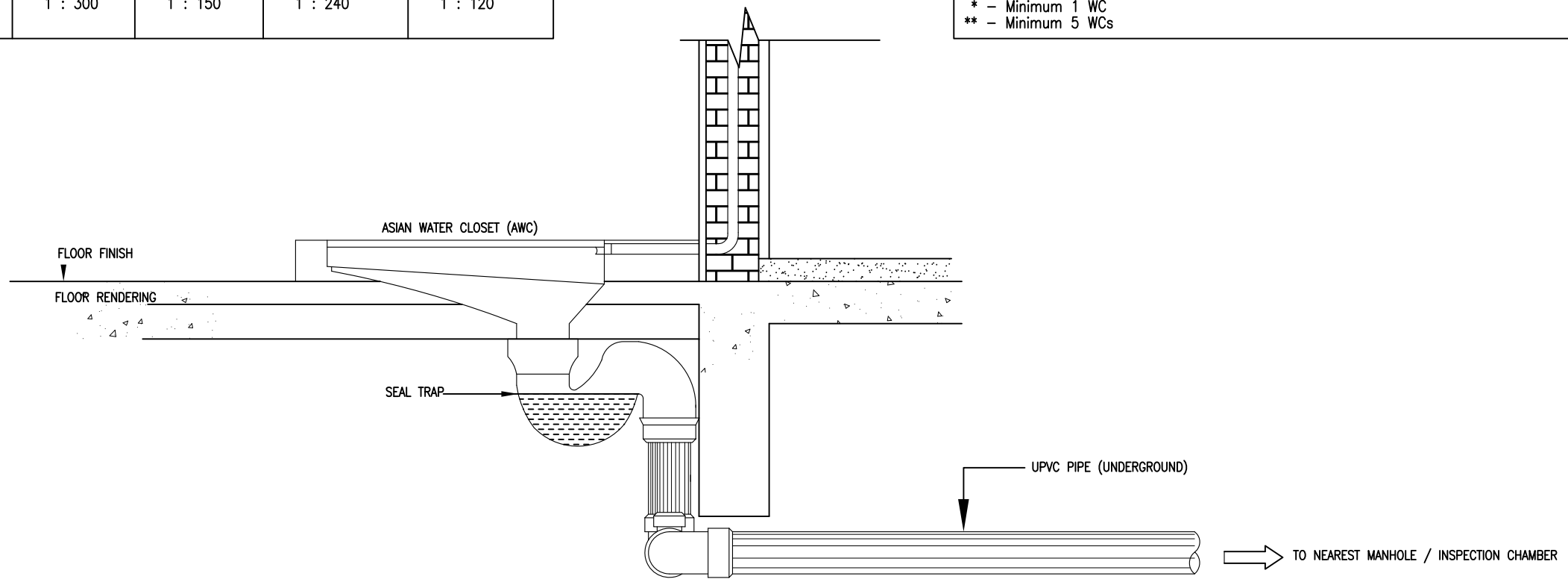

DETAILS OF SANITARY PIPE INSTALLATION FOR ASIAN WATER CLOSET (AWC)–GROUND FLOOR
[Gradient pipe refer to BS EN 12056 Part 2 (2000)]

SCALE: N.T.S

JKR MEKANIKAL

JASA KEPADA RAKYAT

CAWANGAN KEJURUTERAAN MEKANIKAL
Ibu Pejabat JKR Malaysia

SANITARY PLUMBING SYSTEM

DETAILS OF SANITARY PIPE INSTALLATION FOR ASIAN WATER CLOSET (AWC) -GROUND FLOOR

DATE:	SCALE:
2017	NTS

DRAWING NUMBER:

CKM/STD/CWSP/SP/REV2017/02

Diameter (mm)	Surface Water Drains		Fouls Drains	
	Main Drain 100% gradient	Branch Drain 50% gradient	Main Drain 80% gradient	Branch Drain 40% gradient
75	1 : 75	1 : 35	1 : 60	1 : 30
100	1 : 100	1 : 50	1 : 80	1 : 40
150	1 : 150	1 : 75	1 : 120	1 : 60
225	1 : 225	1 : 110	1 : 180	1 : 90
300	1 : 300	1 : 150	1 : 240	1 : 120

RECOMMENDED MINIMUM GRADIENTS

Peak flow (litres/sec)	Pipe Size (mm)	Minimum Gradient (1 in .....)	Maximum Capacity (litres/sec)
< 1	75 100	1 : 40 1 : 40	4.1 9.2
> 1	75 100 150	1 : 80 1 : 80 * 1 : 150 **	2.8 6.3 15.0

Notes :
* – Minimum 1 WC
** – Minimum 5 WCs

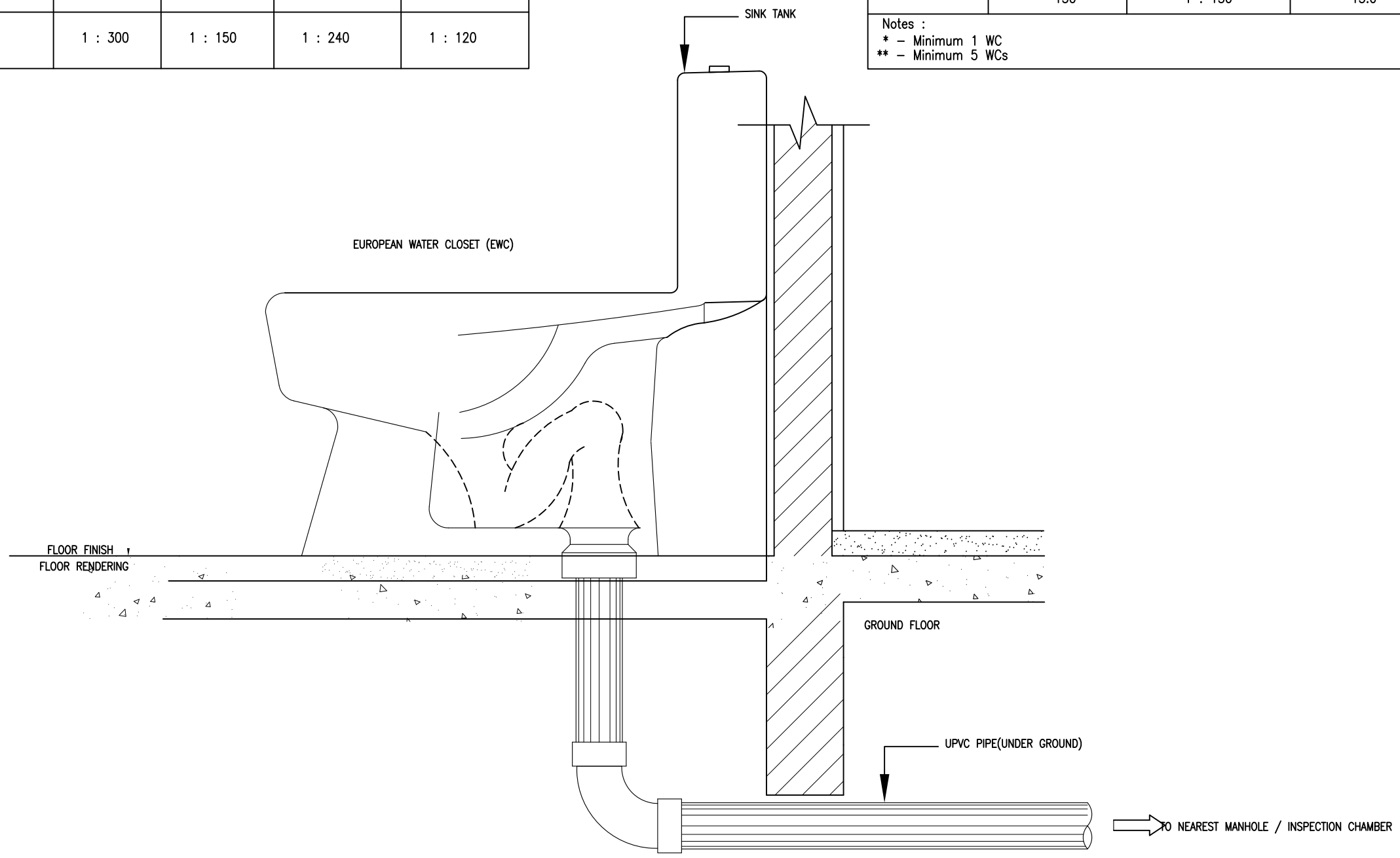

DETAILS OF SANITARY PIPE INSTALLATION FOR EUROPEAN WATER CLOSET (EWC)–GROUND FLOOR
[Gradient pipe refer to BS EN 12056 Part 2 (2000)]

SCALE: N.T.S

JKR MEKANIKAL

JASA KEPADA RAKYAT

CAWANGAN KEJURUTERAAN MEKANIKAL
Ibu Pejabat JKR Malaysia

SANITARY PLUMBING SYSTEM

DETAILS OF SANITARY PIPE INSTALLATION FOR EUROPEAN WATER CLOSET (EWC) -GROUND FLOOR

DATE:	SCALE:
2017	NTS

DRAWING NUMBER:

CKM/STD/CWSP/SP/REV2017/03

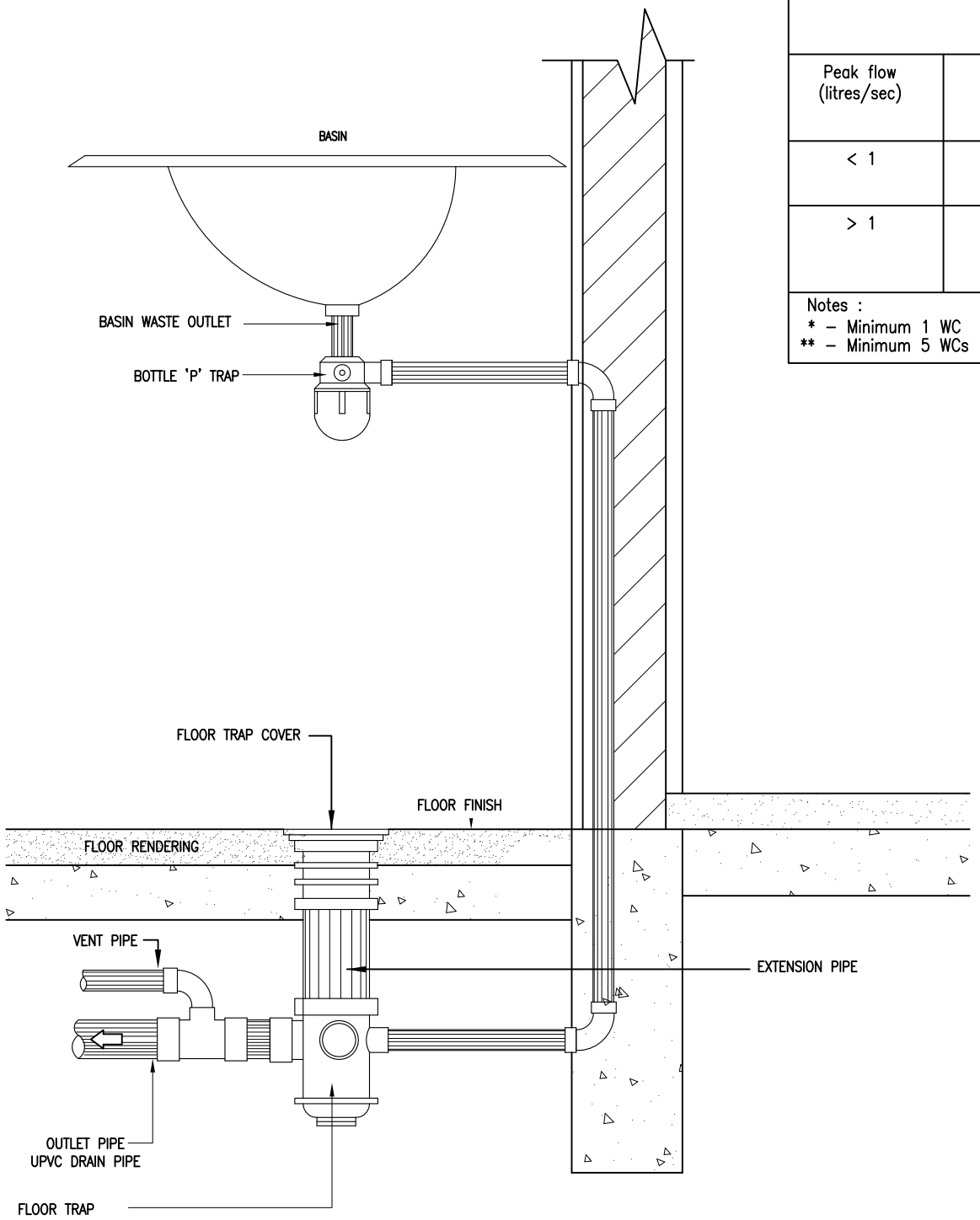

RECOMMENDED MINIMUM GRADIENTS

Peak flow (litres/sec)	Pipe Size (mm)	Minimum Gradient (1 in .....)	Maximum Capacity (litres/sec)
< 1	75 100	1 : 40 1 : 40	4.1 9.2
> 1	75 100 150	1 : 80 1 : 80 * 1 : 150 **	2.8 6.3 15.0

Notes :
* – Minimum 1 WC
** – Minimum 5 WCs

DETAILS OF SANITARY PIPE INSTALLATION FOR
BASIN & FLOOR TRAP–ABOVE GROUND FLOOR
[Gradient pipe refer to BS EN 12056 Part 2 (2000)]

SCALE: N.T.S

JKR MEKANIKAL

JASA KEPADA RAKYAT

CAWANGAN KEJURUTERAAN MEKANIKAL
Ibu Pejabat JKR Malaysia

SANITARY PLUMBING SYSTEM

DETAILS OF SANITARY PIPE INSTALLATION FOR BASIN & FLOOR TRAP
- ABOVE GROUND FLOOR

DATE:	SCALE:
2017	NTS

DRAWING NUMBER:

CKM/STD/CWSP/SP/REV2017/04

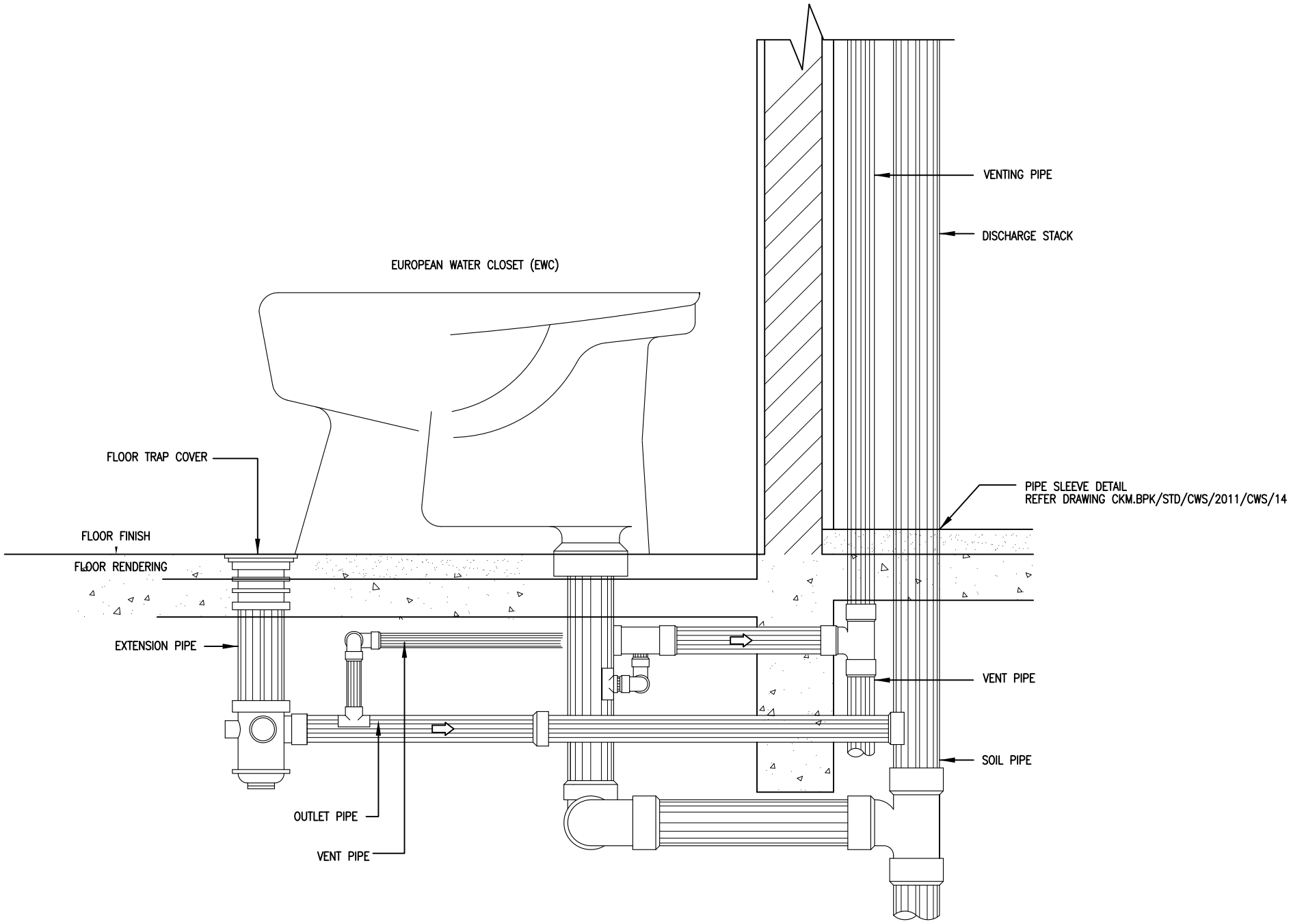

DETAILS OF SANITARY PIPE INSTALLATION
FOR EUROPEAN WATER CLOSET (EWC)
ABOVE GROUND FLOOR

SCALE: N.T.S

JKR MEKANIKAL

JASA KEPADA RAKYAT

CAWANGAN KEJURUTERAAN MEKANIKAL
Ibu Pejabat JKR Malaysia

SANITARY PLUMBING SYSTEM

DETAILS OF SANITARY PIPE INSTALLATION
FOR EUROPEAN WATER CLOSET (EWC)
ABOVE GROUND FLOOR

DATE:	SCALE:
2017	NTS

DRAWING NUMBER:

CKM/STD/CWSP/SP/REV2017/05

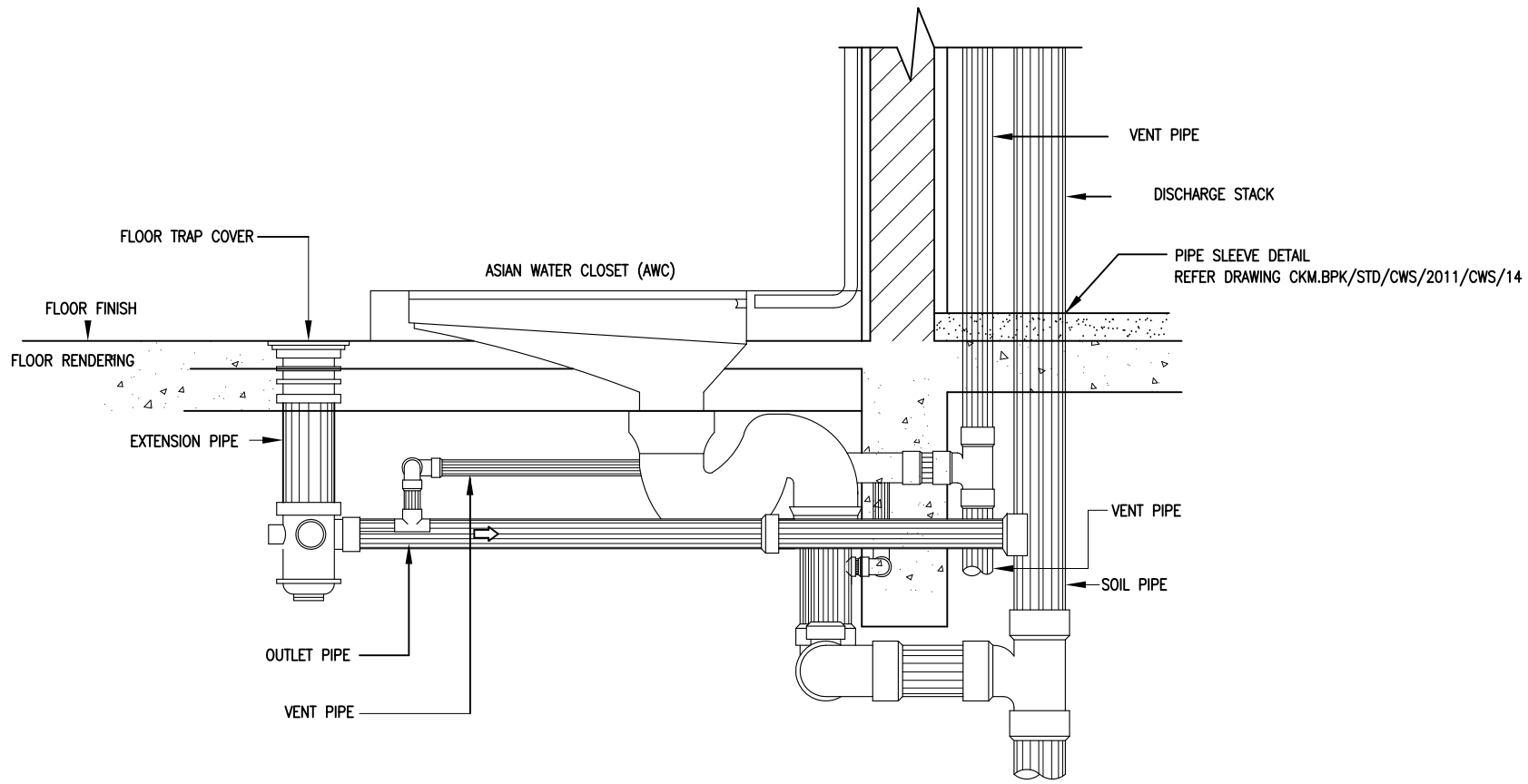

DETAILS OF SANITARY PIPE INSTALLATION FOR
ASIAN WATER CLOSET (AWC)–ABOVE GROUND FLOOR

SCALE: N.T.S

JKR MEKANIKAL

JASA KEPADA RAKYAT

CAWANGAN KEJURUTERAAN MEKANIKAL
Ibu Pejabat JKR Malaysia

SANITARY PLUMBING SYSTEM

DETAILS OF SANITARY PIPE INSTALLATION
FOR ASIAN WATER CLOSET (AWC)
- ABOVE GROUND FLOOR

DATE:	SCALE:
2017	NTS

DRAWING NUMBER:

CKM/STD/CWSP/SP/REV2017/06

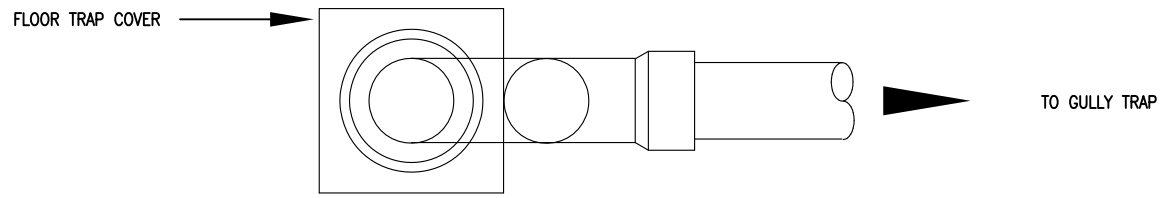

PLAN VIEW

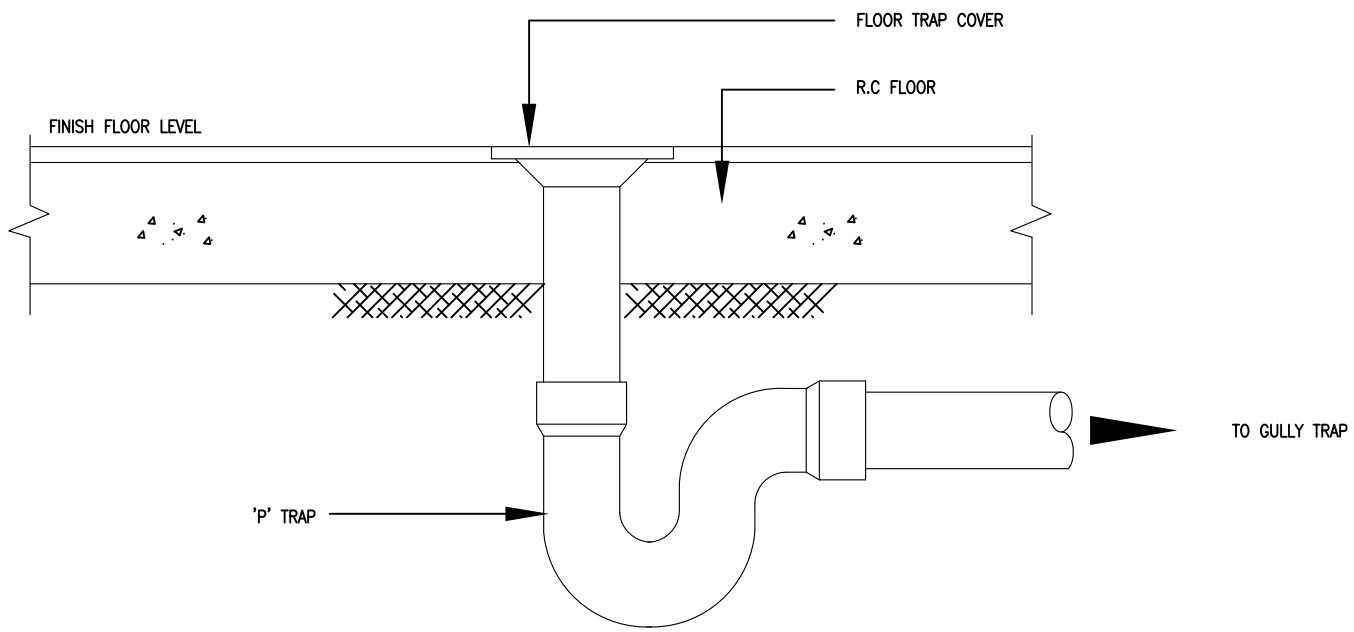

SIDE VIEW

DETAILS OF SANITARY PIPE INSTALLATION FOR FLOOR TRAP UNDER GROUND

SCALE: N.T.S

JASA KEPADA RAKYAT

CAWANGAN KEJURUTERAAN MEKANIKAL
Ibu Pejabat JKR Malaysia

SANITARY PLUMBING SYSTEM

DETAILS OF SANITARY PIPE INSTALLATION FOR FLOOR TRAP UNDER GROUND

DATE:	SCALE:
2017	NTS

DRAWING NUMBER:

CKM/STD/CWSP/SP/REV2017/07

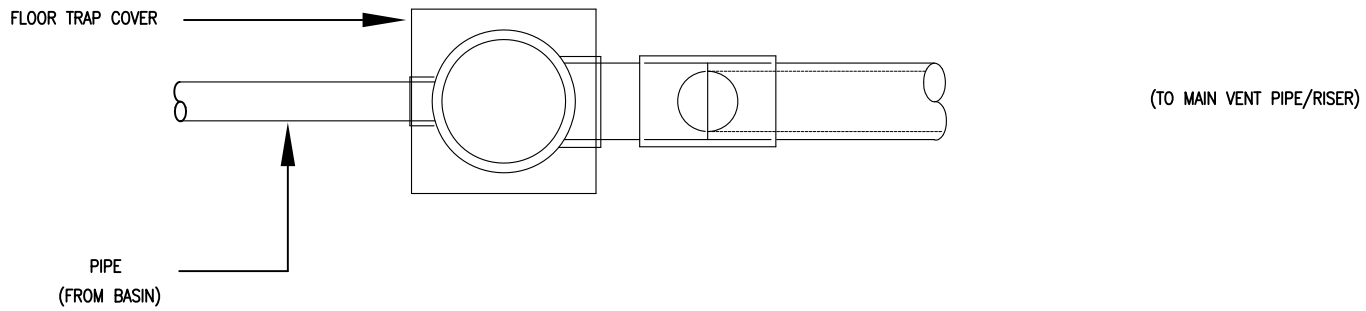

PLAN VIEW

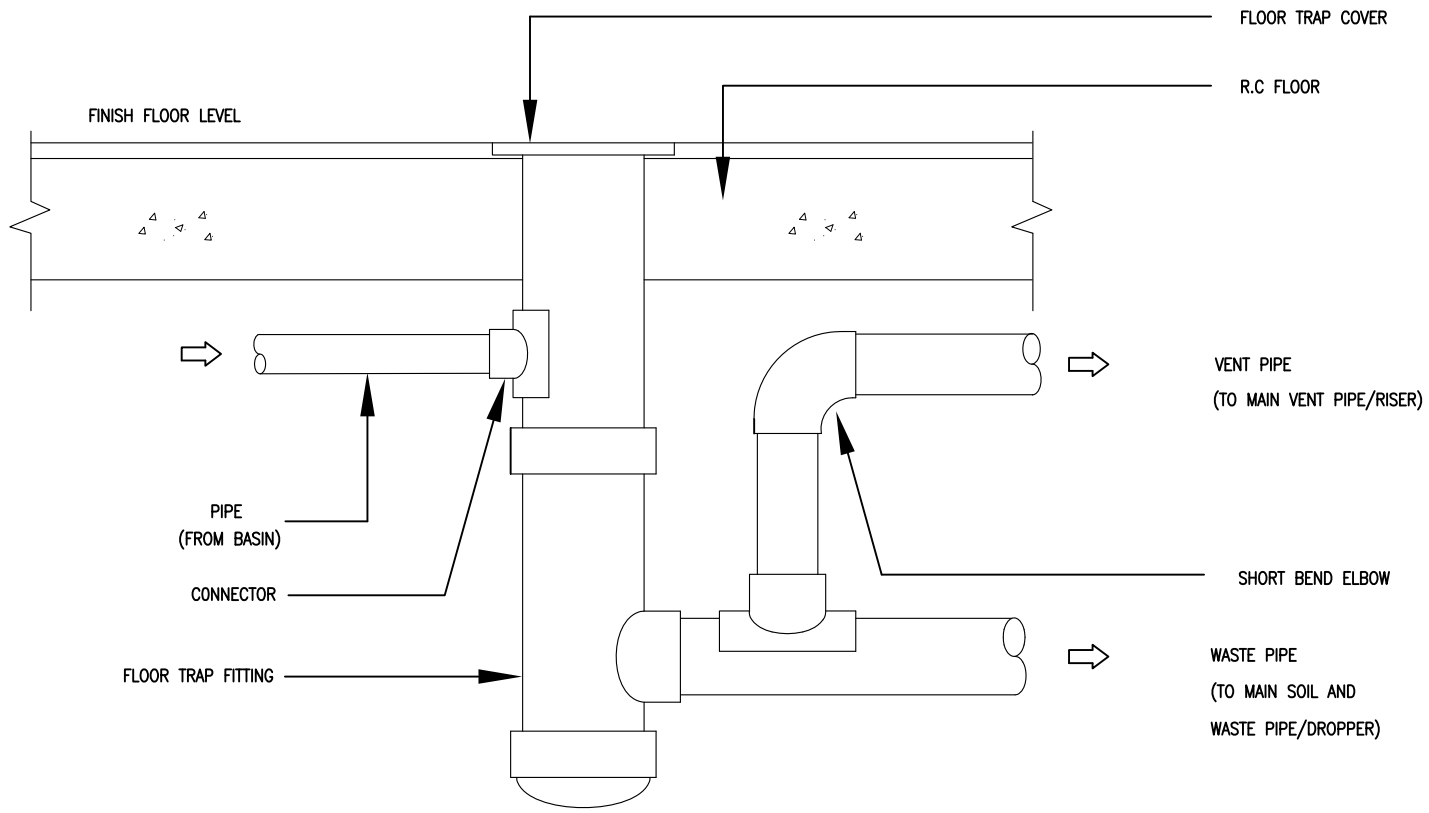

SIDE VIEW

DETAILS OF SANITARY PIPE INSTALLATION–FOR FLOOR TRAP ABOVE GROUND

SCALE: N.T.S

JKR MEKANIKAL

JASA KEPADA RAKYAT

CAWANGAN KEJURUTERAAN MEKANIKAL
Ibu Pejabat JKR Malaysia

SANITARY PLUMBING SYSTEM

DETAILS OF SANITARY PIPE INSTALLATION FOR FLOOR TRAP ABOVE GROUND

DATE:	SCALE:
2017	NTS

DRAWING NUMBER:

CKM/STD/CWSP/SP/REV2017/08

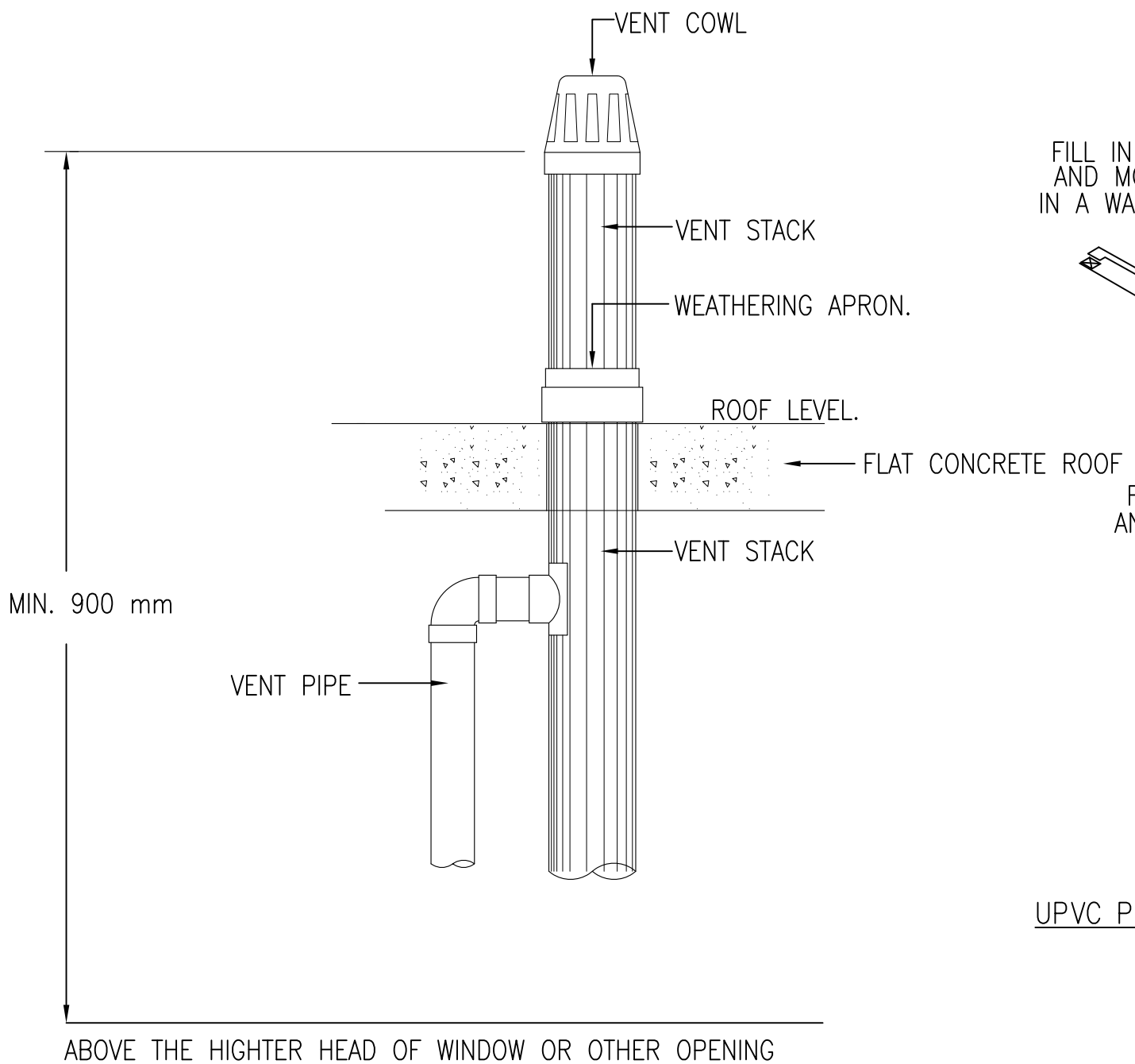

DETAILS OF VENT COWL INSTALLATION

SCALE: N.T.S

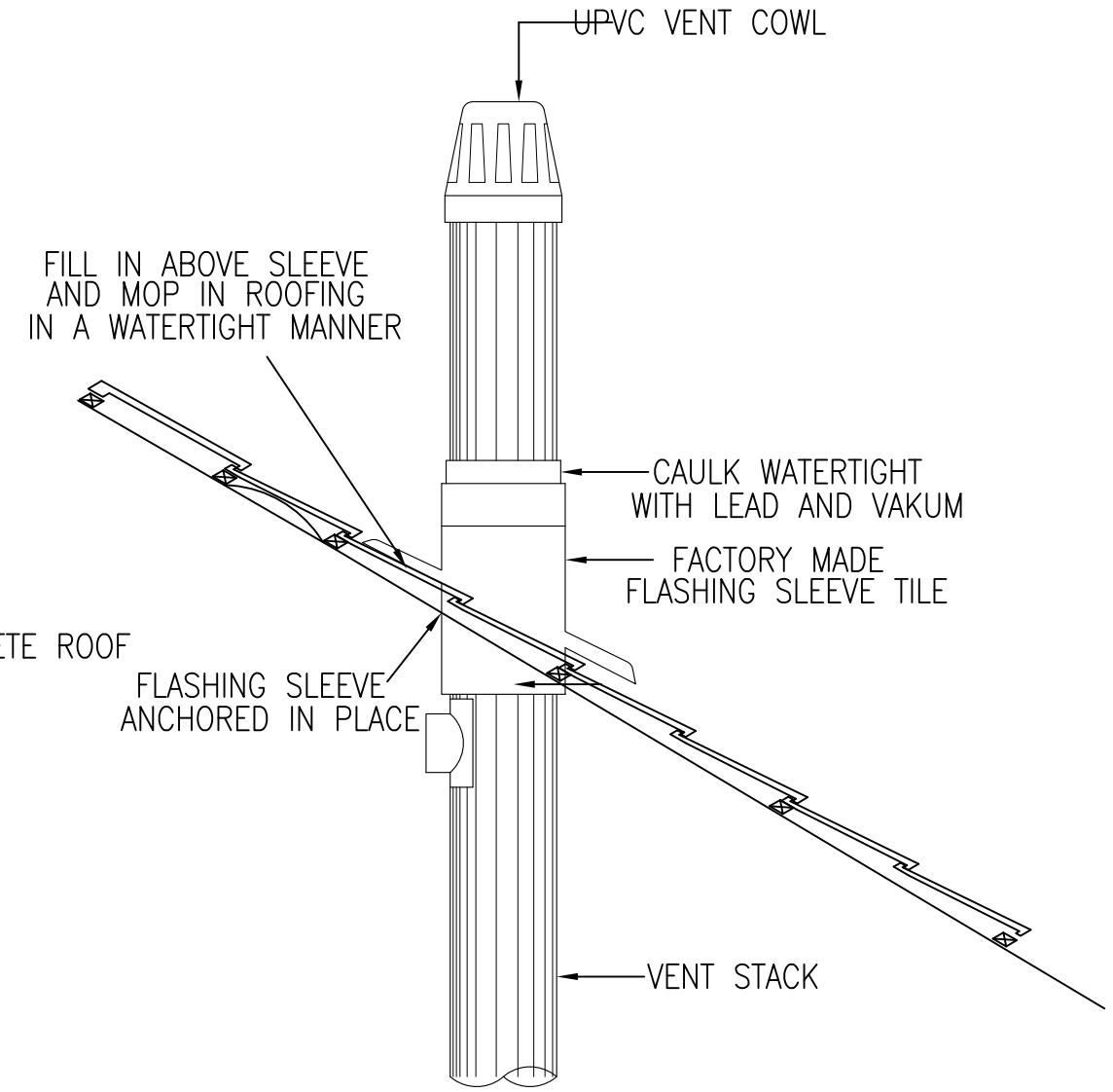

UPVC PIPE PENETRATION DETAIL THROUGH PITCH ROOF

SCALE: N.T.S

NOTE:

1. The stack is not less than 900 mm above the head of any window or other opening into a building and within a horizontal distance of 3 m. (SOURCE: BS 5572)
2. All main stack shall be minimum 150 mm diameter or subject to S.O approval.

JKR MEKANIKAL

JASA KEPADA RAKYAT

CAWANGAN KEJURUTERAAN MEKANIKAL
Ibu Pejabat JKR Malaysia

SANITARY PLUMBING SYSTEM

DETAILS OF VENT COWL INSTALLATION

DATE:	SCALE:
2017	NTS

DRAWING NUMBER:

CKM/STD/CWSP/SP/REV2017/09

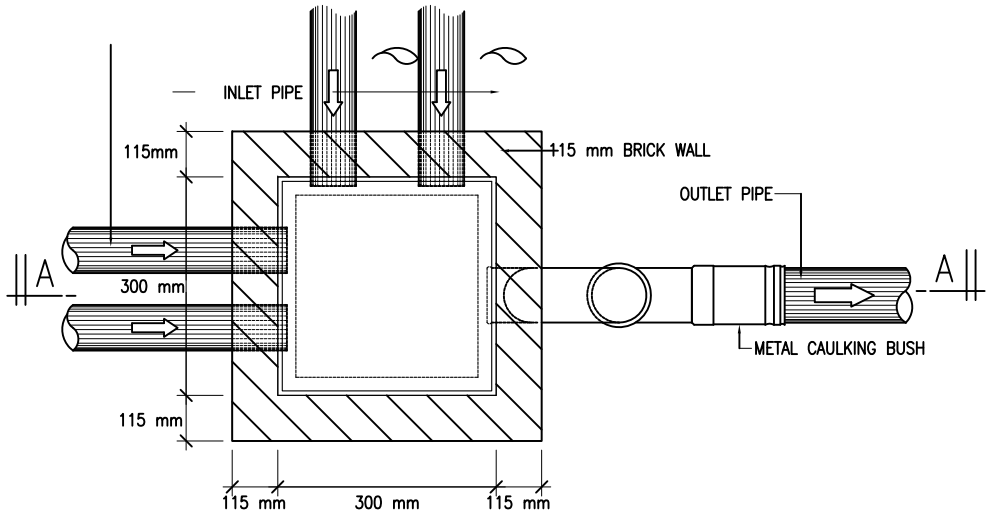

PLAN VIEW
(Maximum 4 inlet from floor trap & basin to gully trap)

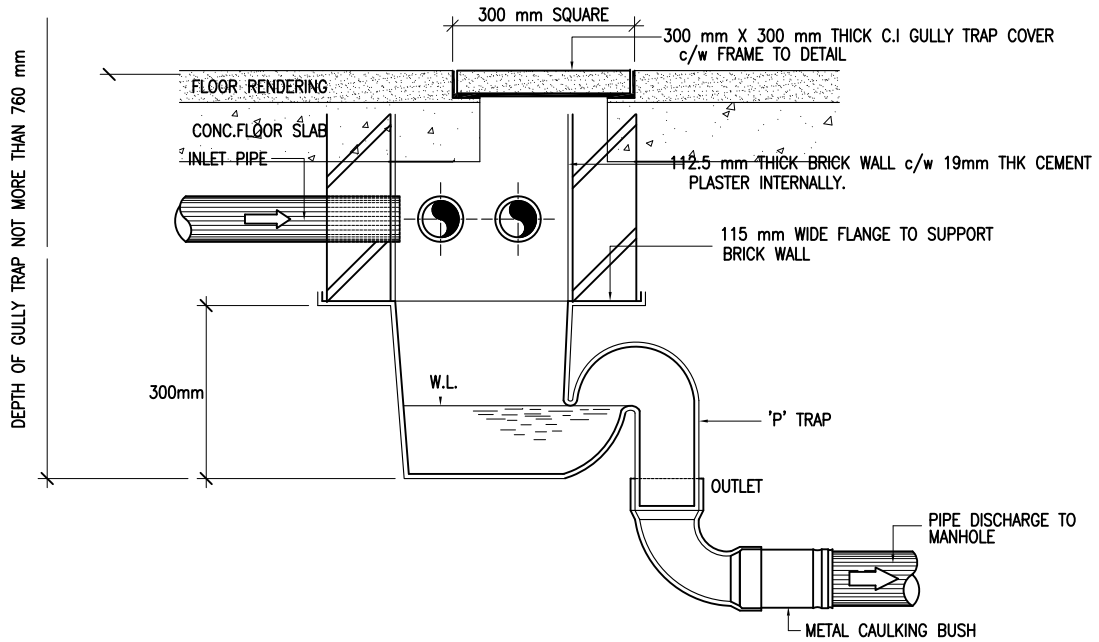

SECTION A–A

DETAILS OF GULLY TRAP INSTALLATION

SCALE : N.T.S.

NOTE:

1. Maximum 4 incoming inlet pipe are allowed per 1 gully trap

JKR MEKANIKAL

JASA KEPADA RAKYAT

CAWANGAN KEJURUTERAAN MEKANIKAL
Ibu Pejabat JKR Malaysia

SANITARY PLUMBING SYSTEM

DETAILS OF GULLY TRAP INSTALLATION

DATE:	SCALE:
2017	NTS

DRAWING NUMBER:

CKM/STD/CWSP/SP/REV2017/10

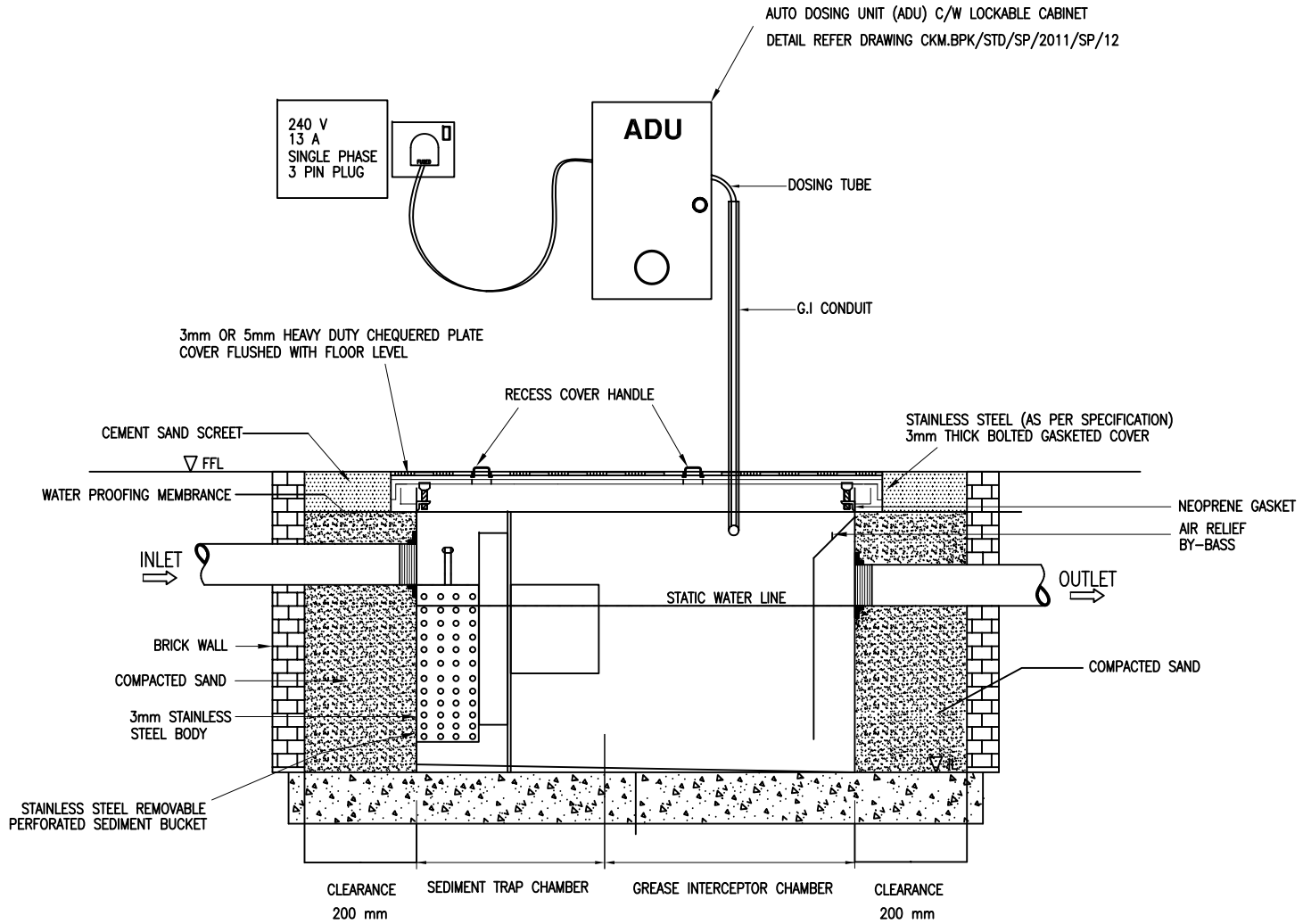

CROSS SECTION VIEW

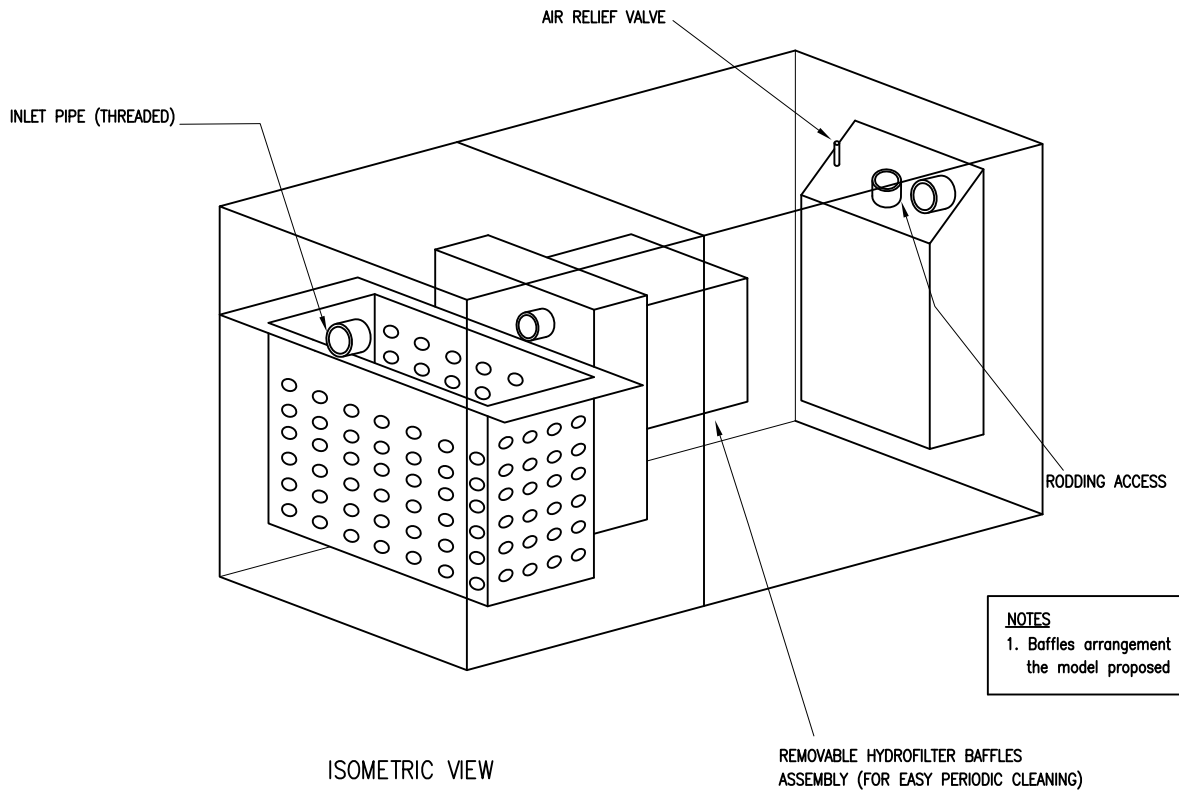

ISOMETRIC VIEW

NOTES

1. Baffles arrangement may vary with the model proposed by supplier

DETAILS OF GREASE TRAP INSTALLATION

SCALE : N.T.S.

NOTE:

1. Grease trap must be maintained regularly i.e
   a. Bucket to be cleared daily.
   b. Grease to be skimmed off at the minimum on alternate days. However for heavy usage, grease must be skimmed daily.
2. Shall use Bioenzymes to biochemically degrade fats, oil & grease trapped on the grease trap.
3. Liquid or powder type of bioenzymes can be used.

LEGEND:

IL Invert Level

FFL Finish Floor Level

ADU Automatic Dosing Unit

JKR MEKANIKAL

JASA KEPADA RAKYAT

CAWANGAN KEJURUTERAAN MEKANIKAL
Ibu Pejabat JKR Malaysia

SANITARY PLUMBING SYSTEM

DETAILS OF GREASE TRAP INSTALLATION

DATE:	SCALE:
2017	NTS

DRAWING NUMBER:

CKM/STD/CWSP/SP/REV2017/11

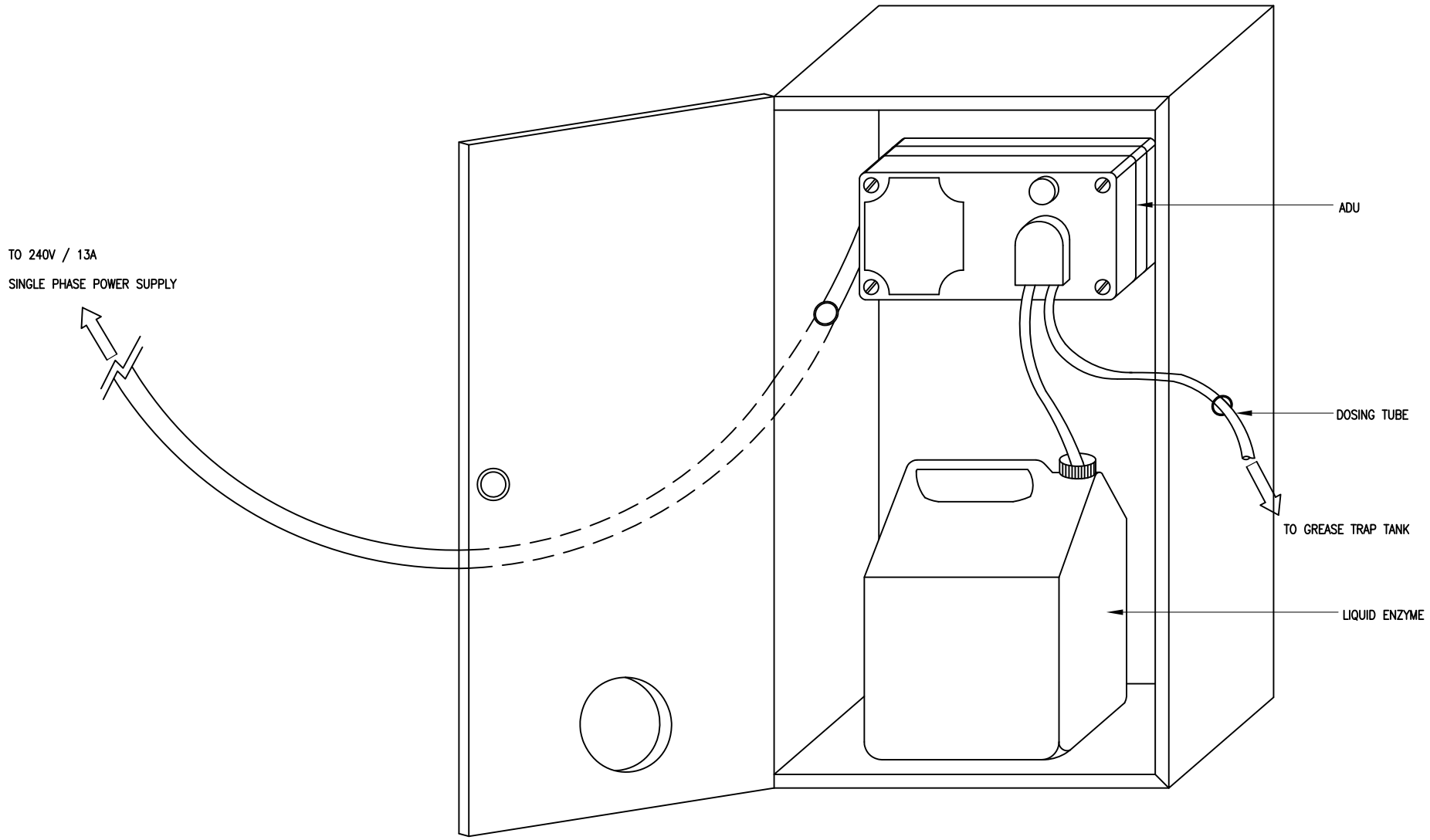

DETAILS OF STAINLESS STEEL OR MILD STEEL
WEATHERPROOF LOCKABLE CABINET FOR AUTO DOSING UNIT(ADU) STORAGE

SCALE: N.T.S

JASA KEPADA RAKYAT

CAWANGAN KEJURUTERAAN MEKANIKAL
Ibu Pejabat JKR Malaysia

SANITARY PLUMBING SYSTEM

DETAILS OF STAINLESS STEEL OR MILD STEEL WEATHERPROOF LOCKABLE CABINET FOR AUTO DOSING UNIT (ADU) STORAGE

DATE:	SCALE:
2017	NTS

DRAWING NUMBER:

CKM/STD/CWSP/SP/REV2017/12

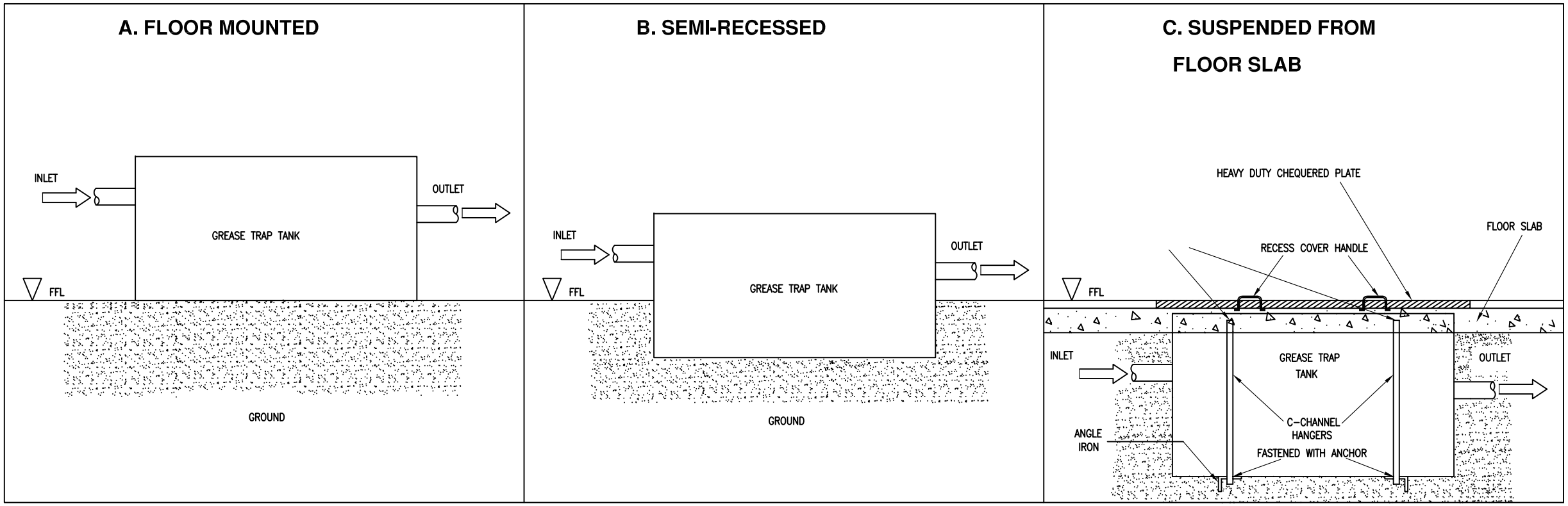

TYPE OF INSTALLATION FOR GREASE TRAP

SCALE : NTS

JKR MEKANIKAL

JASA KEPADA RAKYAT

CAWANGAN KEJURUTERAAN MEKANIKAL
Ibu Pejabat JKR Malaysia

SANITARY PLUMBING SYSTEM

TYPE OF INSTALLATION FOR GREASE TRAP

DATE:	SCALE:
2017	NTS

DRAWING NUMBER:

CKM/STD/CWSP/SP/REV2017/13

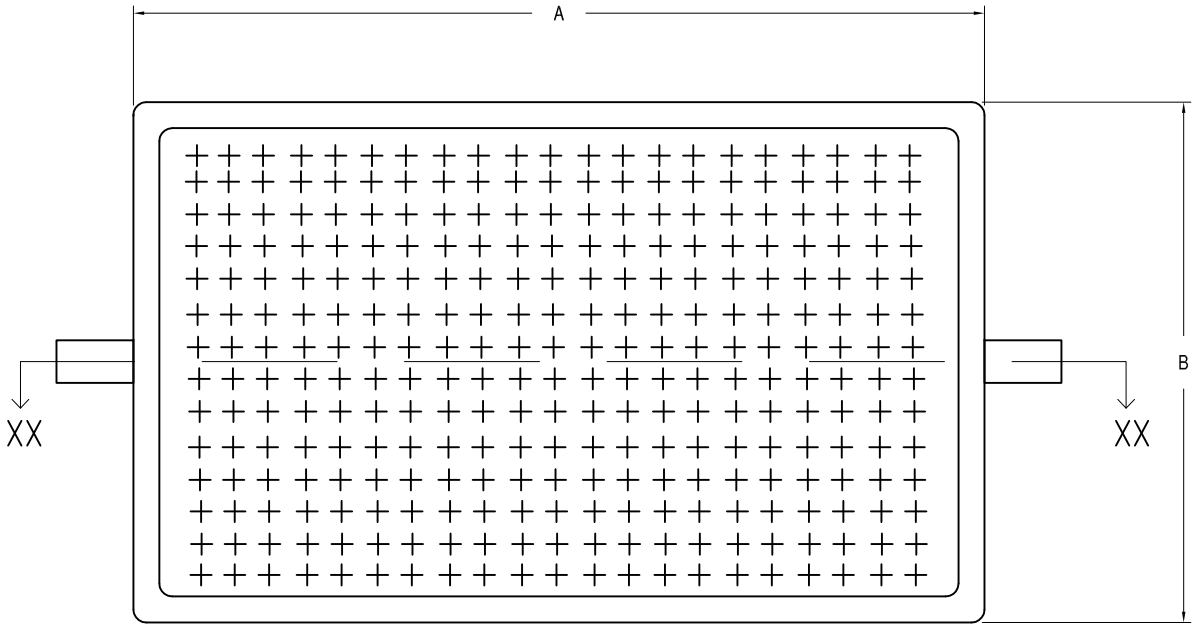

PLAN VIEW

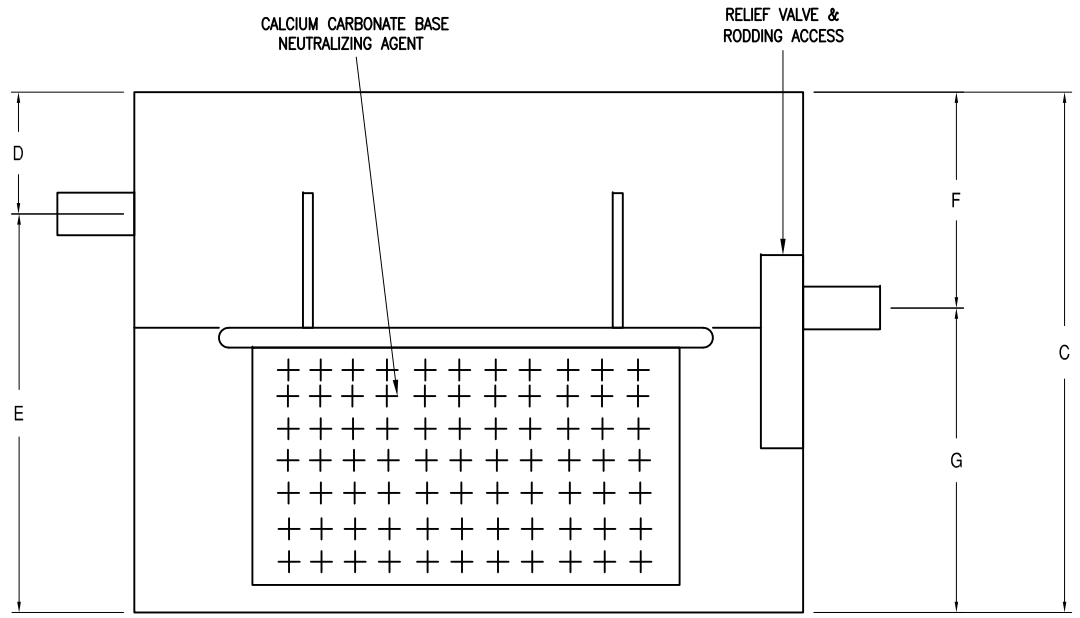

SIDE VIEW – XX

DIMENSION DATA

Average Continuous Flowrate (litres/min)	No. of Sink / Tab	Capacity (litres)	Inlet & Outlet (mm)
10	1-10	50	75
17	1-20	85	75
25	21-30	125	75
30	31-40	150	75
40	41-50	200	100

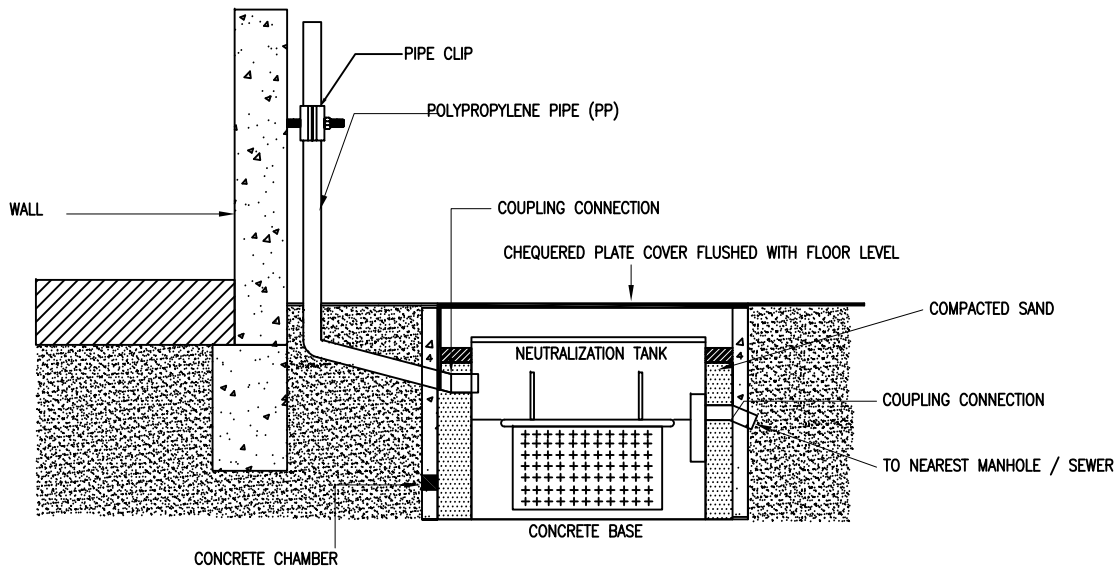

SIDE VIEW

DETAILS OF INSTALLATION FOR NEUTRALIZATION TANK

SCALE :N.T.S.

JKR MEKANIKAL

JASA KEPADA RAKYAT

CAWANGAN KEJURUTERAAN MEKANIKAL
Ibu Pejabat JKR Malaysia

SANITARY PLUMBING SYSTEM

DETAILS OF INSTALLATION FOR NEUTRALIZATION TANK

DATE:	SCALE:
2017	NTS

DRAWING NUMBER:

CKM/STD/CWSP/SP/REV2017/14

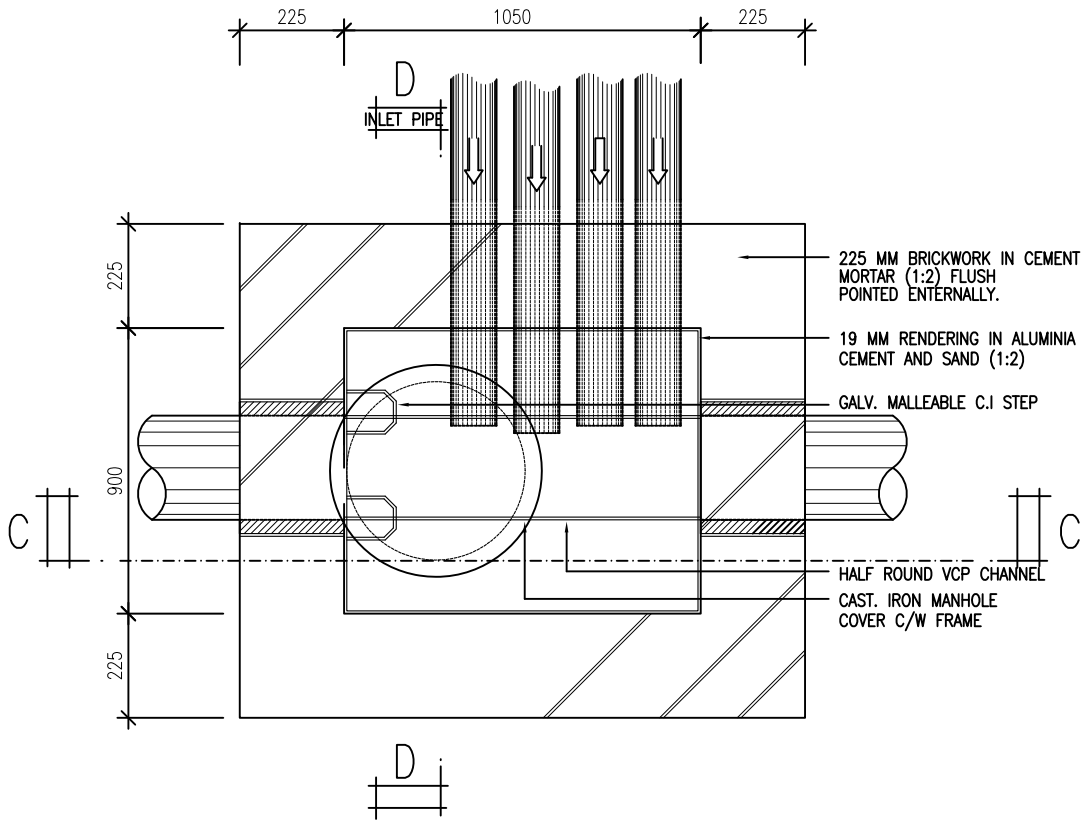

PLAN VIEW

(Maximum 4 inlet from gully trap/wc/stack pipe to inspection chamber)

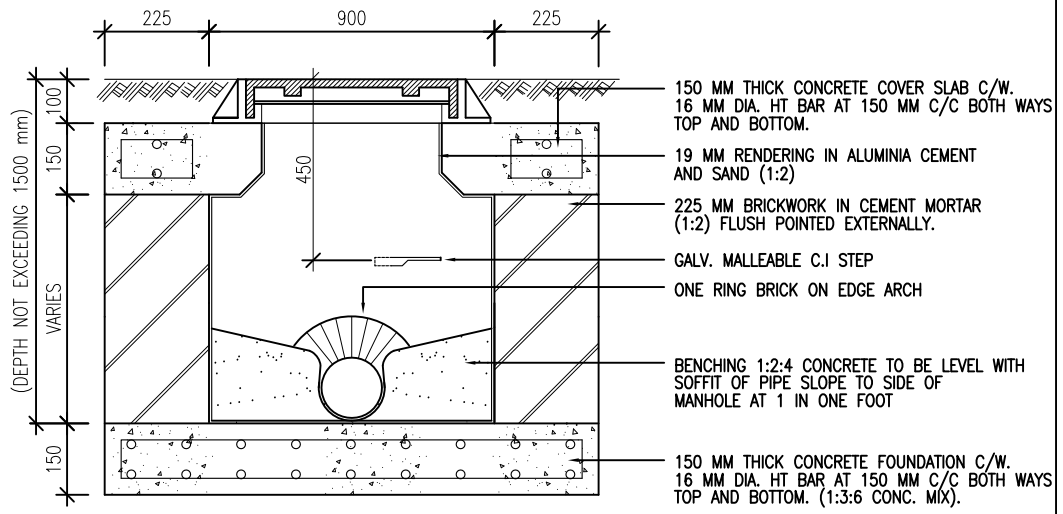

SECTION 'D – D'

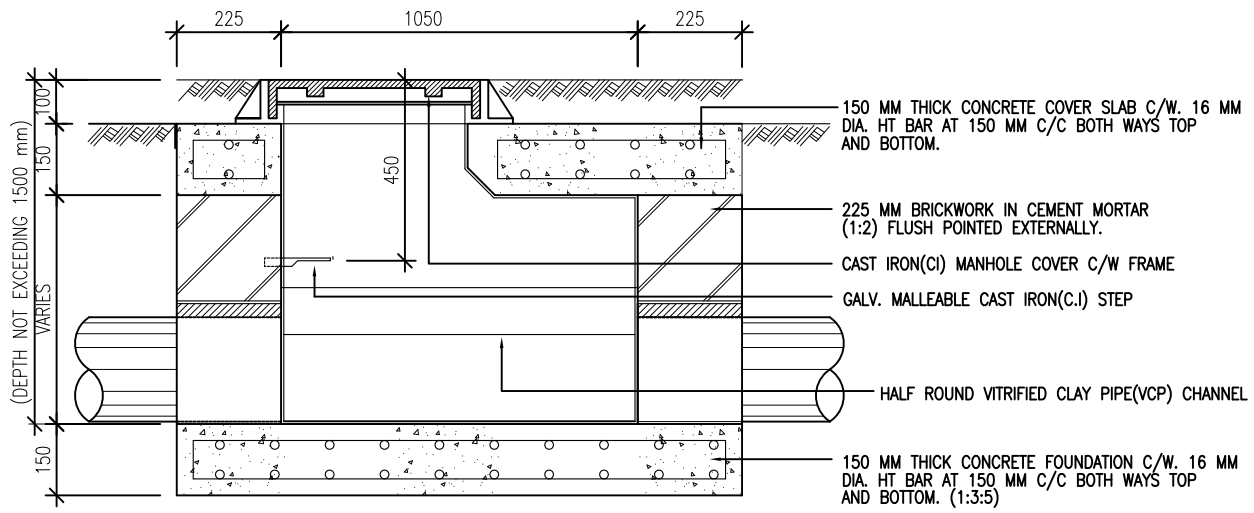

SECTION 'C – C'

DETAILS OF INSPECTION CHAMBER

SCALE: N.T.S

JKR MEKANIKAL

JASA KEPADA RAKYAT

CAWANGAN KEJURUTERAAN MEKANIKAL
Ibu Pejabat JKR Malaysia

SANITARY PLUMBING SYSTEM

DETAILS OF INSPECTION CHAMBER

DATE:	SCALE:
2017	NTS

DRAWING NUMBER:

CKM/STD/CWSP/SP/REV2017/15